MAJOR TECHNICAL SPECIFICATIONS

Item \ Area				Europe			
Body Type				Wagon			
Vehicle Grade				–			
Model Code				ACM20R-ANMDKW	ACM20R-ARMDKW	ACM20L-ANMDKW	ACM20L-ARMDKW
Major Dimension & Vehicle Weights	Overall	Length	mm (in.)	4650 (183.1)	←	←	←
		Width	mm (in.)	1760 (69.3)	←	←	←
		Height	mm (in.)	1675 (65.9), 1725 (67.9)*1	←	←	←
	Wheel Base		mm (in.)	2825 (111.2)	←	←	←
	Tread	Front	mm (in.)	1505 (59.3)	←	←	←
		Rear	mm (in.)	1500 (59.1)	←	←	←
	Room	Length	mm (in.)	2755 (108.5)	←	←	←
		Width	mm (in.)	1505 (59.3)	←	←	←
		Height	mm (in.)	1250/1200 (49.2/47.2)	←	←	←
	Overhang	Front	mm (in.)	860 (34.1)	←	←	←
		Rear	mm (in.)	965 (38.0)	←	←	←
	Min. Running Ground Clearance		mm (in.)	180 (7.1)	←	←	←
	Angle of Approach		degrees	17	←	←	←
	Angle of Departure		degrees	26	←	←	←
	Curb Weight	Front	kg (lb)	820~860 (1808~1896)	825~865 (1819~1907)	810~860 (1786~1896)	815~865 (1797~1907)
		Rear	kg (lb)	615~655 (1356~1444)	630~670 (1389~1477)	615~655 (1356~1444)	630~670 (1389~1477)
		Total	kg (lb)	1435~1515 (3153~3340)	1455~1535 (3208~3384)	1425~1515 (3142~3340)	1445~1535 (3186~3384)
	Gross Vehicle Weight	Front	kg (lb)	930 (2050)	950 (2094)	930 (2050)	950 (2094)
		Rear	kg (lb)	1115 (2458)	1190 (2624)	1115 (2458)	1190 (2624)
		Total	kg (lb)	2045 (4508)	2140 (4718)	2045 (4508)	2140 (4718)
	Fuel Tank Capacity		L (lmp.gal.)	60 (13.2)	←	←	←
	Luggage Compartment Capacity		m^3 (cu.ft.)	0.212 (7.5)	←	←	←
Performance	Max. Speed		km/h (mph)	192 (119)	←	←	←
	Max. Cruising Speed		km/h (mph)	—	—	—	—
	Acceleration	0 to 100 km/h	sec.	11.4	←	←	←
		0 to 400 m	sec.	—	—	—	—
	Max. Permissible Speed	1st Gear	km/h (mph)	46 (29)	←	←	←
		2nd Gear	km/h (mph)	86 (53)	←	←	←
		3rd Gear	km/h (mph)	133 (83)	←	←	←
		4th Gear	km/h (mph)	172 (109)	←	←	←
	Min. Turning Radius	Tire	m (ft.)	5.5 (18.0)	←	←	←
		Body	m (ft.)	5.9 (19.4)	←	←	←
Engine	Engine Type			1AZ-FE	←	←	←
	Valve Mechanism			16-Valve, DOHC	←	←	←
	Bore × Stroke		mm (in.)	86.0 × 86.0 (3.39 × 3.39)	←	←	←
	Displacement		cm^3 (cu.in.)	1998 (121.9)	←	←	←
	Compression Ratio			9.8 : 1	←	←	←
	Carburetor Type or Injection Pump Type (Diesel)			EFI	←	←	←
	Research Octane No. or Cetane No. (Diesel)			95 or More	←	←	←
	Max. Output (EEC)		kW/rpm	110/6000	←	←	←
	Max. Torque (EEC)		N·m/rpm	192/4000	←	←	←
Engine Electrical	Battery Capacity (5HR)		Voltage & Amp. hr.	12 – 36	←	12 – 36, 48*2	←
	Alternator Output		Watts	1200	←	←	←
	Starter Output		kW	1.2	←	←	←
Chassis	Clutch Type			Dry, Single	←	←	←
	Transaxle Type			E356	←	←	←
	Transmission Gear Ratio	In First		3.833	←	←	←
		In Second		2.045	←	←	←
		In Third		1.333	←	←	←
		In Fourth		1.028	←	←	←
		In Fifth		0.775	←	←	←
		In Reverse		3.583	←	←	←
	Counter Gear Ratio			—	—	—	—
	Differential Gear Ratio (Final)			4.235	←	←	←
	Brake Type	Front		Ventilated Disc	←	←	←
		Rear		Solid Disc	←	←	←
	Parking Brake Type			Duo-Servo	←	←	←
	Brake Booster Type and Size		in.	Single, 10”	←	←	←
	Proportioning Valve Type			—	—	—	—
	Suspension Type	Front		MacPherson Strut	←	←	←
		Rear		Torsion-Beam	←	←	←
	Stabilizer Bar	Front		STD	←	←	←
		Rear		STD	←	←	←
	Steering Gear Type			Rack & Pinion	←	←	←
	Steering Gear Ratio (Overall)			16.2 or 16.7	←	←	←
	Power Steering Type			Integral Type	←	←	←

*1: With Roof Rail
*2: Cold Area Package

Europe					
Wagon					
–					
CLM20R-ANMDYW	CLM20R-ARMDYW	CLM20L-ANMDYW	CLM20L-ARMDYW	ACM20R-ANSDKW	ACM20R-ARSDKW
←	←	←	←	←	←
←	←	←	←	←	←
←	←	←	←	←	←
←	←	←	←	←	←
←	←	←	←	←	←
←	←	←	←	←	←
←	←	←	←	←	←
←	←	←	←	←	←
←	←	←	←	←	←
←	←	←	←	←	←
←	←	←	←	←	←
←	←	←	←	←	←
←	←	←	←	←	←
←	←	←	←	←	←
930~975 (2050~2150)	935~980 (2061~2161)	920~975 (2028~2150)	925~980 (2039~2161)	855~895 (1885~1973)	860~900 (1896~1984)
610~650 (1345~1433)	625~665 (1378~1466)	610~650 (1345~1433)	625~665 (1378~1466)	615~655 (1356~1444)	630~670 (1389~1477)
1540~1625 (3395~3583)	1560~1645 (3439~3627)	1530~1625 (3373~3583)	1550~1645 (3417~3627)	1470~1550 (3241~3417)	1490~1570 (3285~3461)
1045 (2304)	1065 (2348)	1045 (2304)	1065 (2348)	965 (2128)	985 (2172)
1110 (2447)	1185 (2613)	1110 (2447)	1185 (2613)	1115 (2458)	1190 (2624)
2155 (4751)	2250 (4960)	2155 (4751)	2250 (4960)	2080 (4586)	2175 (4795)
←	←	←	←	←	←
←	←	←	←	←	←
180 (112)	←	←	←	←	←
—	—	—	—	—	—
12.5	←	←	←	12.1	←
—	—	—	—	—	—
43 (27)	←	←	←	46 (29)	←
81 (50)	←	←	←	86 (53)	←
124 (77)	←	←	←	133 (83)	←
170 (106)	←	←	←	172 (109)	←
←	←	←	←	←	←
←	←	←	←	←	←
1CD-FTV	←	←	←	1AZ-FE	←
←	←	←	←	16-Valve, DOHC	←
82.2 × 94.0 (3.24 × 3.7)	←	←	←	86.0 × 86.0 (3.39 × 3.39)	←
1995 (121.7)	←	←	←	1998 (121.9)	←
18.6 : 1	←	←	←	9.8 : 1	←
Common-Rail Type	←	←	←	EFI	←
48 or More	←	←	←	95 or More	←
85/4000	←	←	←	110/6000	←
250/1800 ~ 3000	←	←	←	192/4000	←
12 – 55	←	12 – 55, 64*2	←	12 – 36	←
1560	←	←	←	1200	←
1.4	←	←	←	1.3	←
←	←	←	←	—	—
E355	←	←	←	U241E	←
←	←	←	←	3.943	←
←	←	←	←	2.197	←
←	←	←	←	1.413	←
0.972	←	←	←	1.020	←
←	←	←	←	3.145	←
←	←	←	←	—	—
—	—	—	—	—	—
3.684	←	←	←	3.120	←
←	←	←	←	←	←
←	←	←	←	←	←
←	←	←	←	←	←
Single, 9”	←	←	←	Single, 10”	←
—	—	—	—	—	—
←	←	←	←	←	←
←	←	←	←	←	←
←	←	←	←	←	←
←	←	←	←	←	←
←	←	←	←	←	←
←	←	←	←	←	←
←	←	←	←	←	←

*1: With Roof Rail
*2: Cold Area Package

Item \ Area			Europe		Australia	
Body Type			Wagon			
Vehicle Grade			–			
Model Code			ACM20L-ANSDKW	ACM20L-ARSDKW	ACM20R-ARMEKQ	ACM20R-ARSEKQ
Major Dimension & Vehicle Weights	Overall	Length mm (in.)	4650 (183.1)	←	←	←
		Width mm (in.)	1675 (65.9)	←	←	←
		Height mm (in.)	1675 (65.9), 1725 (67.9)*1	←	←	←
	Wheel Base	mm (in.)	2825 (111.2)	←	←	←
	Tread	Front mm (in.)	1505 (59.3)	←	←	←
		Rear mm (in.)	1500 (59.1)	←	←	←
	Room	Length mm (in.)	2755 (108.5)	←	←	←
		Width mm (in.)	1505 (59.3)	←	←	←
		Height mm (in.)	1250/1200 (49.2/47.2)	←	←	←
	Overhang	Front mm (in.)	860 (34.1)	←	←	←
		Rear mm (in.)	965 (38.0)	←	←	←
	Min. Running Ground Clearance	mm (in.)	180 (7.1)	←	←	←
	Angle of Approach	degrees	17	←	←	←
	Angle of Departure	degrees	26	←	←	←
	Curb Weight	Front kg (lb)	845~895 (1863~1973)	850~900 (1874~1984)	840~855 (1852~1885)	875~890 (1929~1962)
		Rear kg (lb)	615~655 (1356~1444)	630~670 (1389~1477)	600~635 (1323~1400)	595~630 (1312~1389)
		Total kg (lb)	1460~1550 (3219~3417)	1480~1570 (3263~3461)	1440~1490 (3175~3285)	1470~1520 (3241~3351)
	Gross Vehicle Weight	Front kg (lb)	965 (2128)	985 (2172)	930 (2050)	965 (2128)
		Rear kg (lb)	1115 (2458)	1190 (2624)	1210 (2668)	1205 (2657)
		Total kg (lb)	2080 (4586)	2175 (4795)	2140 (4718)	2170 (4784)
	Fuel Tank Capacity	L (lmp.gal.)	60 (13.2)	←	←	←
	Luggage Compartment Capacity	m^3 (cu.ft.)	0.212 (7.5)	←	0.169 (6.0)	←
Performance	Max. Speed	km/h (mph)	180 (112)	←	←	←
	Max. Cruising Speed	km/h (mph)	—	—	—	—
	Acceleration	0 to 100 km/h sec.	12.1	←	11.4	12.1
		0 to 400 m sec.	—	—	—	—
	Max. Permissible Speed	1st Gear km/h (mph)	46 (29)	←	←	←
		2nd Gear km/h (mph)	86 (53)	←	←	←
		3rd Gear km/h (mph)	133 (83)	←	←	←
		4th Gear km/h (mph)	172 (109)	←	←	←
	Min. Turning Radius	Tire m (ft.)	5.5 (18.0)	←	←	←
		Body m (ft.)	5.9 (19.4)	←	←	←
Engine	Engine Type		1AZ-FE	←	←	←
	Valve Mechanism		16-Valve, DOHC	←	←	←
	Bore × Stroke	mm (in.)	86.0 × 86.0 (3.39 × 3.39)	←	←	←
	Displacement	cm^3 (cu.in.)	1998 (121.9)	←	←	←
	Compression Ratio		9.8 : 1	←	←	←
	Carburetor Type or Injection Pump Type (Diesel)		EFI	←	←	←
	Research Octane No. or Cetane No. (Diesel)		95 or More	←	91 or More	←
	Max. Output (EEC)	kW/rpm	110/6000	←	←	←
	Max. Torque (EEC)	N·m/rpm	192/4000	←	←	←
Engine Electrical	Battery Capacity (5HR)	Voltage & Amp. hr.	12 – 36, 48*2	←	12 – 36	←
	Alternator Output	Watts	1200	←	←	←
	Starter Output	kW	1.3	←	1.2	1.3
Chassis	Clutch Type		—	—	Dry, Single	—
	Transaxle Type		U241E	←	E356	U241E
	Transmission Gear Ratio	In First	3.943	←	3.833	3.943
		In Second	2.197	←	2.045	2.197
		In Third	1.413	←	1.333	1.413
		In Fourth	1.020	←	1.028	1.020
		In Fifth	3.145	←	0.775	3.145
		In Reverse	—	←	3.583	—
	Counter Gear Ratio		—	—	—	—
	Differential Gear Ratio (Final)		3.120	←	4.235	3.120
	Brake Type	Front	Ventilated Disc	←	←	←
		Rear	Solid Disc	←	←	←
	Parking Brake Type		Duo-Servo	←	←	←
	Brake Booster Type and Size	in.	Single, 10”	←	←	←
	Proportioning Valve Type		—	—	—	—
	Suspension Type	Front	MacPherson Strut	←	←	←
		Rear	Torsion-Beam	←	←	←
	Stabilizer Bar	Front	STD	←	←	←
		Rear	STD	←	←	←
	Steering Gear Type		Rack & Pinion	←	←	←
	Steering Gear Ratio (Overall)		16.2 or 16.7	←	←	←
	Power Steering Type		Integral Type	←	←	←

*1: With Roof Rail
*2: Cold Area Package

General Countries
Wagon
–
ACM20R-ARSEK
←
←
←
←
←
←
←
←
←
←
←
←
←
←
←
←
←
←
1200 (2646)
2165 (4773)
←
←
←
—
←
—
←
←
←
←
←
←
←
←
←
←
←
95 or More
←
←
←
←
←
—
←
←
←
←
←
←
—
—
←
←
←
←
—
←
←
←
←
←
←
←

*1: With Roof Rail
*2: Cold Area Package

BODY ELECTRICAL

LIGHTING

■HEADLIGHT

The Avensis Verso/Picnic has adopted the 4 multi-reflector headlights.
Conventional headlights accomplish the dispersion and distribution of the light that is emitted by the bulbs through the lens cut pattern. However, with the multi-reflector type headlights, the light from the bulbs is dispersed and distributed through multiple parabolic shaped reflectors. As a result, the lens cut pattern is no longer provided in the center of the lens, thus realizing a clear look.

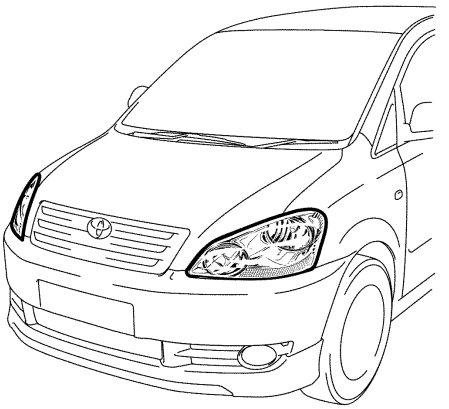

206BE41

▶ Light Distribution Diagram ◀

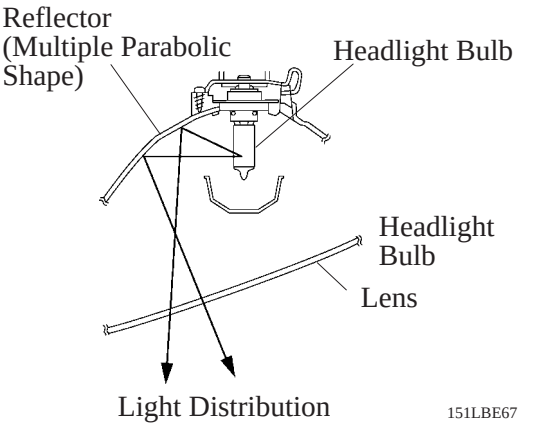

151LBE67

■DAYTIME RUNNING LIGHT SYSTEM

This system is designed to automatically activate the headlights (LO beam) and taillights during the daytime to keep the car highly visible to other vehicles. This system is optional equipment on some LHD models for Europe. This system is controlled by the Body ECU.
This system is enabled when the conditions given below are met.

- Ignition switch ON condition
- Alternator L terminal signal input (Engine Running Condition)
- Light control switch OFF condition

▶ Wiring Diagram ◀

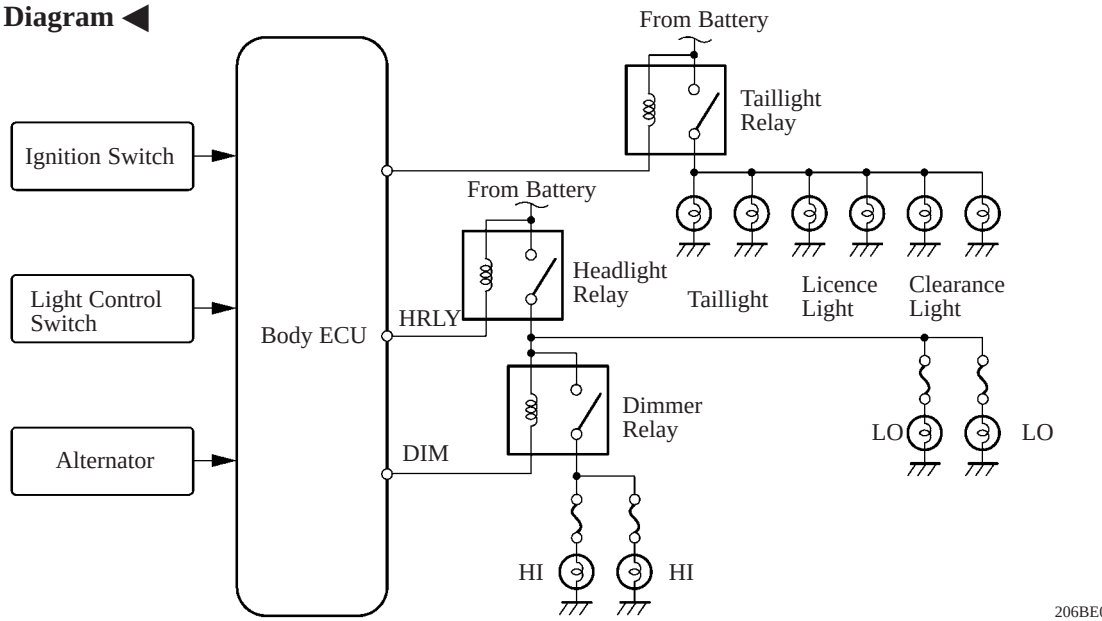

206BE01

■HEADLIGHT BEAM LEVEL CONTROL SYSTEM

This system keeps the beam of the headlights adjusted to the appropriate level in accordance with the number (weight) of passengers and volume of luggage. The headlight beam level can be adjusted by operating the headlight beam level control switch. This system is standard equipment for Europe model.

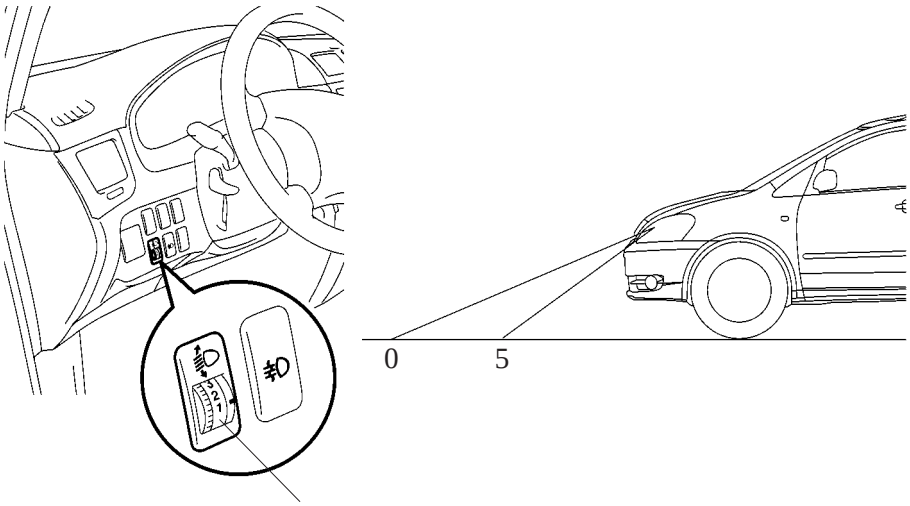

■ILLUMINATED ENTRY SYSTEM

- When a door is unlocked through a driver door key operation or transmitter operation, or if a door is opened or closed, the illuminated entry system turns ON the interior light, ignition key illumination, and luggage light.
  If the ignition switch is turned to the ACC or ON position or if all doors are locked during these (the said lights) lights are ON approx. 15 seconds, the lights will immediately turn OFF. This system is controlled by the Body ECU.
- The model with double locking system cannot operate the illuminated entry system using a key cylinder.

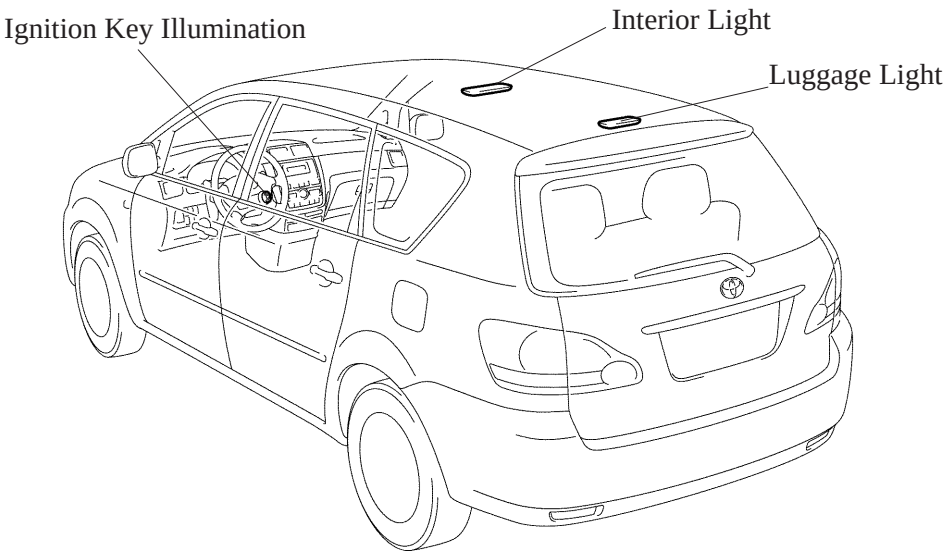

LHD Model

■LIGHT REMINDER SYSTEM

This system is standard equipment on the model for Europe.
When the ignition key is turned from the ON or ACC to LOCK position while the driver's door open with the taillights or headlights turned on, this system warns the driver that the lights remain on by sounding the buzzer. The buzzer is located inside the combination meter.

METER

■COMBINATION METER

1. General

- An analog display type combination meter has been adopted.
- An odometer and trip meter which used LCD (Liquid Crystal Display) has been adopted.
- All the meters, gauges, indicator lights, and warning lights have adopted LEDs (Light Emitting Diodes), and discontinued the use of light bulbs, thus resulting in reduces consumption of electrical energy.
- This combination meter has a built-in buzzer (for Light reminder).
- This conventional water temperature gauge has been discontinued in this combination meter. Instead, and indicator light is used to display the water temperature conditions.

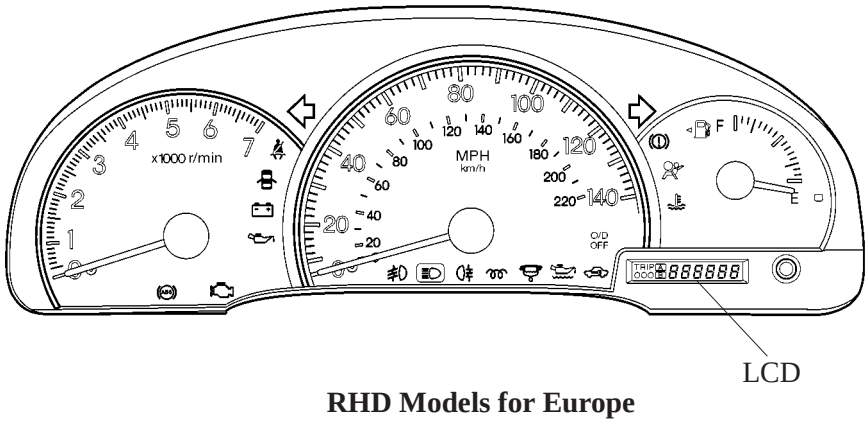

RHD Models for Europe

▶ Main Meter and Gauge Input Signals ◀

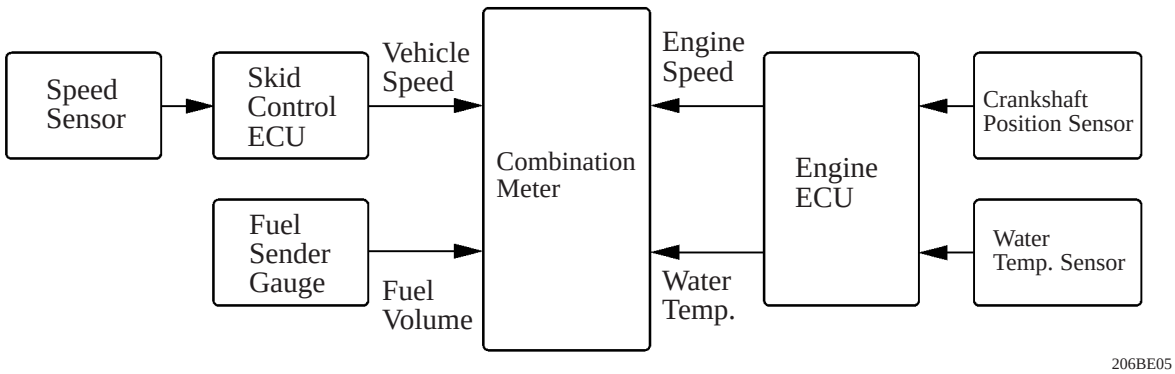

Service Tip

If the combination meter malfunctions, it must be replaced as a combination meter assembly. Refer to the Avensis Verso/Picnic Chassis & Body Repair Manual (Pub. No. RM864E).

BE

2. Water Temperature Indicator Light

The color and the light condition of this indicator light change in accordance with the water temperature.

Water Temp (°C)	Color	Light Condition
Below approx. 50	Blue	Illuminate
Above approx. 118.5	Red	Flash
Normal	Not illuminate	

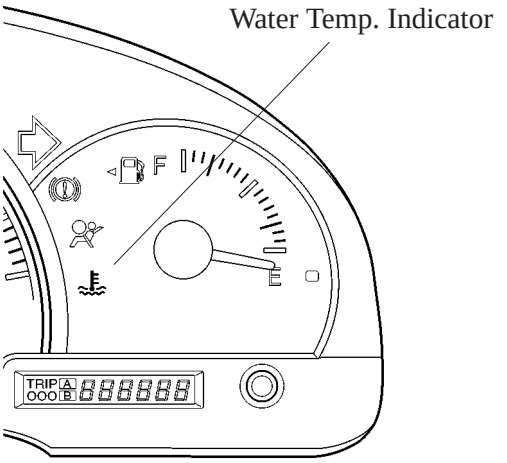

206BE06

WIPER

■TELESCOPIC WIPER

1. General

- The telescopic wiper is standard equipment for only Australia model.
- The telescopic wiper consists of a wiper arm for the front passenger side that wipes telescopically from the stopped position to the upper return position in order to enlarge the wiping area.

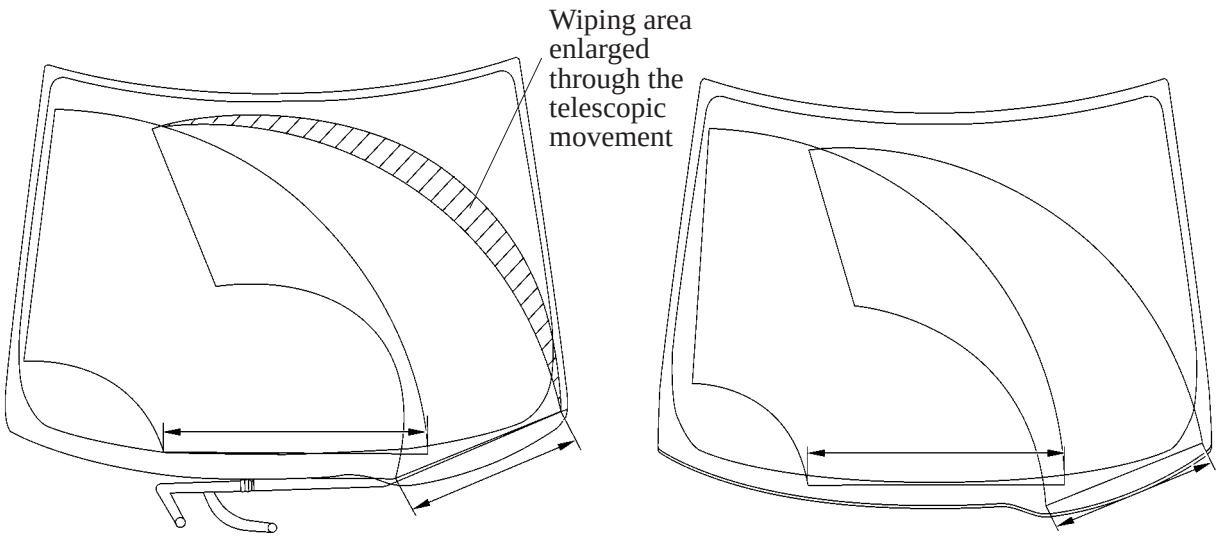

Telescopic Type **Conventional Type** 206BE42

2. Construction

The telescopic wiper consists of a pivot, and a link lever (for driving the wiper), main lever, and idle lever.

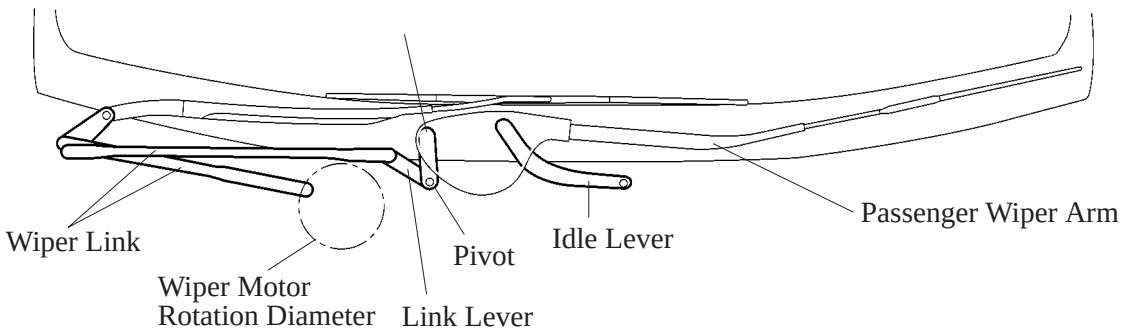

181BE07

3. Operation

- The rotation of the wiper motor moves the link lever for driving the wiper, and with the pivot acting as the fulcrum, point P1 (in which the arm and the main lever are linked) moves in the direction of the arrow. Accordingly, point P2 (in which the arm and the idle lever are linked) assumes this fulcrum and raises the arm to start wiping.

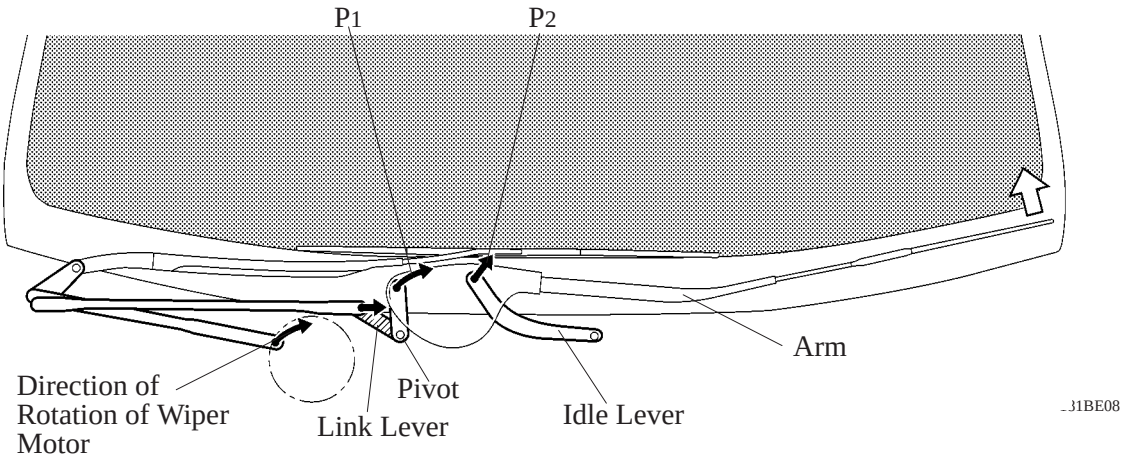

- The movement of the arm causes P2 to move in the direction of the arrow, and the idle lever moves with P3 acting as the fulcrum. Accordingly, as the arm moves in the same way as P2 in the direction of the arrow, it results in the wiping of a large area.

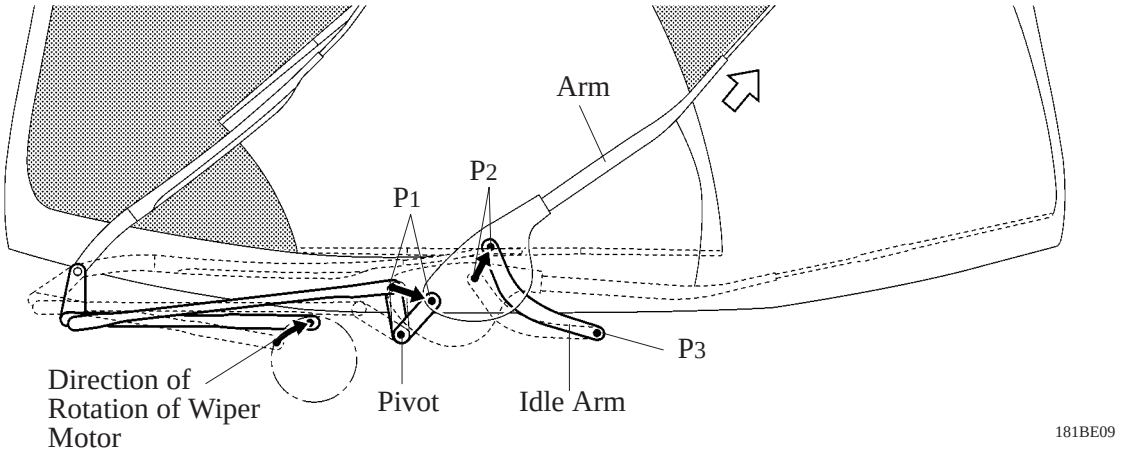

- As the main lever moves further, P1 moves in the direction of the arrow. Using P2 as the fulcrum again, the arm moves the tip of the blade to the upper return position, and as P2 also moves in the direction of the arrow , the idle lever operates. Accordingly, as the blade portion is pulled towards the direction of the arrow, it wipes until the upper return position.

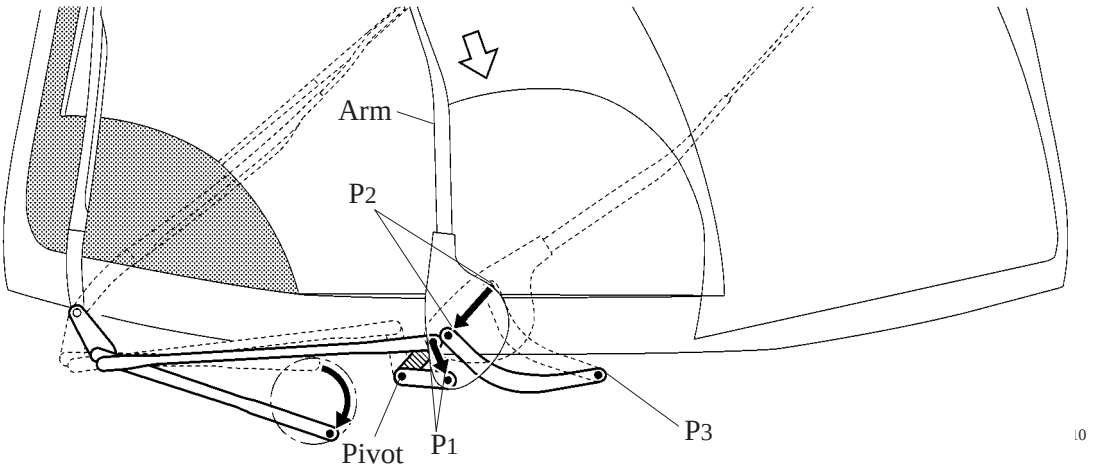

AIR CONDITIONER

■ DESCRIPTION

1. General

The air conditioner system in the Avensis Verso/Picnic has the following features:

Front Air Conditioner and Heater Unit	• A semi-center location air conditioner and heater unit has been adopted. • A multi-tank, super-slim structure evaporator has been adopted. (Only for front A/C) • A straight flow (full-path flow) aluminum heater core has been adopted. • A 2-way flow type air conditioner and heater unit has been provided on the 1CD-FTV engine models for Europe, and on the 1AZ-FE engine LHD models for Europe with cold area specification.
Rear Heater Unit	The rear heater unit is the same as the previous type, although it has been relocated under the front right seat.
Rear Cooler	• To ensure the comfort of the second and third seat occupants, the rear cooler unit has been provided with dedicated blower outlets for the respective seats. • A multi-tank, super-slim structure evaporator has been adopted.

▶ Equipment List ◀

Destination			Europe	Australia	General Countries
Front A/C			OPT	STD	←
Front Heater	1AZ-FE Engine	Conventional	STD	←	←
		2-Way Flow + PTC*1	OPT*2	—	—
	1CD-FTV Engine	2-Way Flow	STD	—	—
		2-Way Flow + PTC*1	OPT*2	—	—
Rear Cooler			OPT*3	STD	←
Rear Heater		LHD	OPT*2	—	—
		RHD	STD		
Clean Air Filter			OPT*3	STD	←

*1: Only for LHD Models *2: Cold Area Specification Models
*3: with front A/C Models

BE

▶ Performance ◀

Item		Single	Dual		
			Front		Rear
			2-way Flow	Convention-al	
Cooling Performance	Cooling Output W (Kcal/h)	5600	6700		
	Air Flow Volume m^3/h	510	510		340*1
					305*2
	Power Consumption W	260	260		180
Heater Performance	Heater Output W (Kcal/h)	—	6000	5500	1950
	Air Flow Volume m^3/h	—	350	330	100
	Power Consumption W	—	220		40

*1: without Moon Roof
*2: with Moon Roof

▶ Specification ◀

Item				Front	Rear
Ventilation and Heater	Heater Core	Type		Straight Flow (Full-path Flow)	Flat Tube
		Size W × H × L mm (in.)		216.9 × 140 × 46 (8.5 × 5.5 × 1.8)	160 × 92.7 × 36 (6.3 × 3.6 × 1.4)
		Fin Pitch mm (in.)		1.8 (0.07)	2.8 (0.11)
	Blower	Motor Type	2-way Flow	S80Fs13T	—
			Conventional	S70F14T	50Fs23T
		Fan Size Dia × H mm (in.)	2-way Flow	160 × 43 (6.3 × 1.7)*1 142 × 44 (5.6 × 1.7)*2	—
			Conventional	158 × 80 (6.2 × 3.1)	115 × 65 (4.5 × 2.6)
Front A/C and Rear Cooler	Condenser	Type		Multi-flow (Sub-cool)	
		Size W × H × L mm (in.)		710 × 378.3 × 16 (27.9 × 14.9 × 0.6)	
		Fin Pitch mm (in.)		3.2 (0.13)*3 2.8 (0.11)*4	
	Evaporator	Type		Draw Cup	Draw Cup
		Size W × H × L mm (in.)		253.2 × 235 × 58 (9.97 × 9.3 × 2.3)	126.2 × 255 × 58 (5.0 × 10.0 × 2.3)
		Fin Pitch mm (in.)		3.0 (0.12)	3.5 (0.14)
	Compressor	Type		10S15*3 10S17*4	
	Refrigerant	Type		R134a	
		Volume		500 g*3 800 g*4	

*1: Motor Side *2: Fan Side
*3: Single A/C *4: Dual A/C

2. System Diagram

▶ Front A/C & Heater ◀

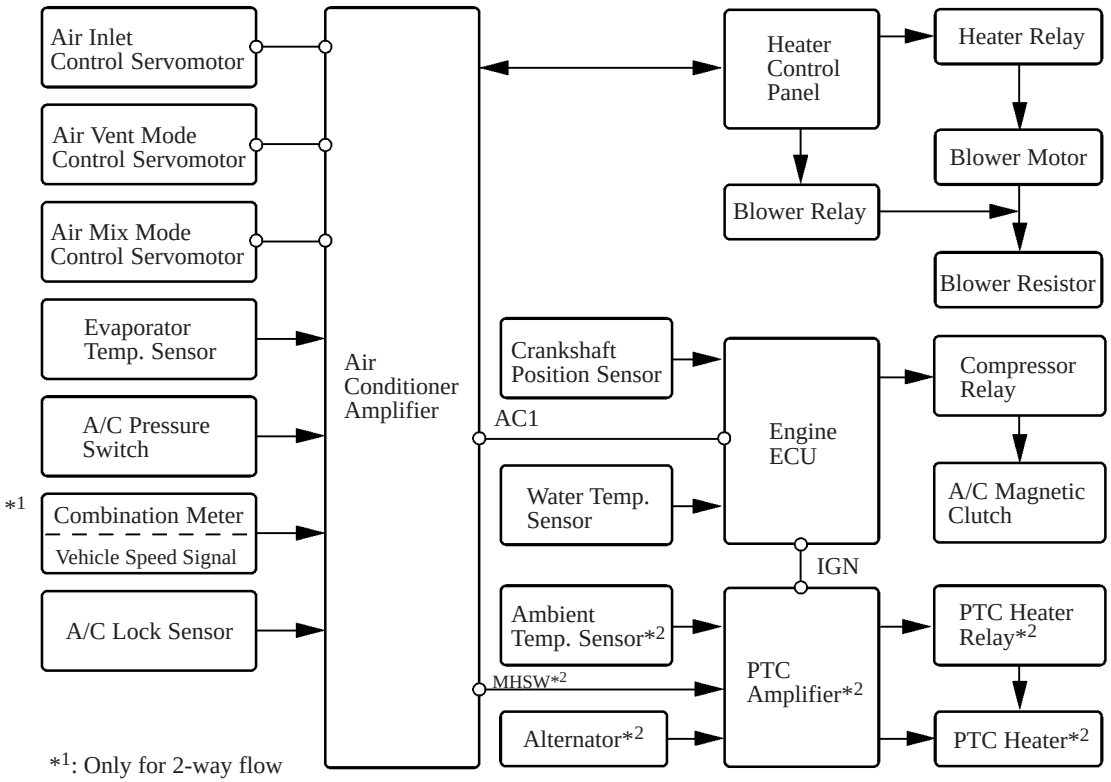

*1: Only for 2-way flow
*2: with PTC Heater

206BE07

1AZ-FE Engine

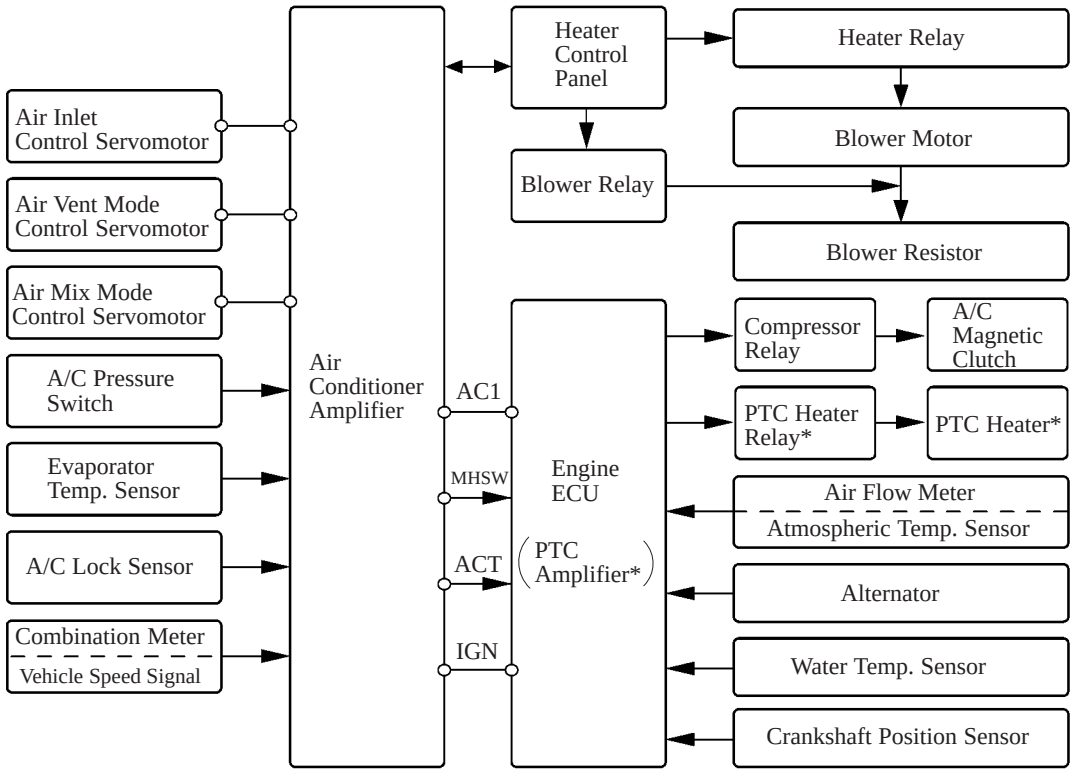

*: with PTC Heater

206BE08

1CD-FTV Engine

BE

▶ Rear Cooler ◀

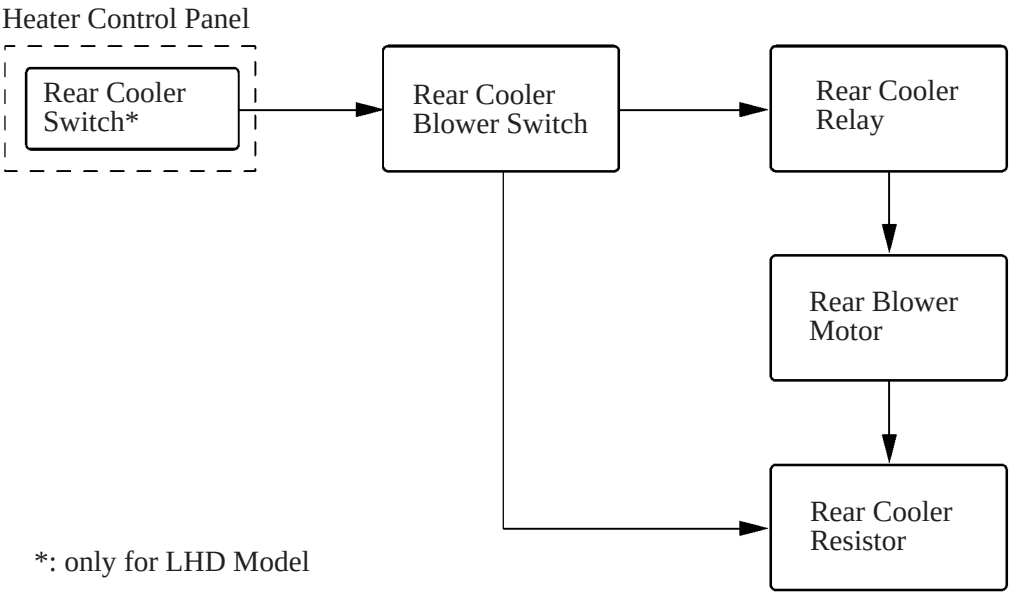

206BE09

▶ Rear Heater ◀

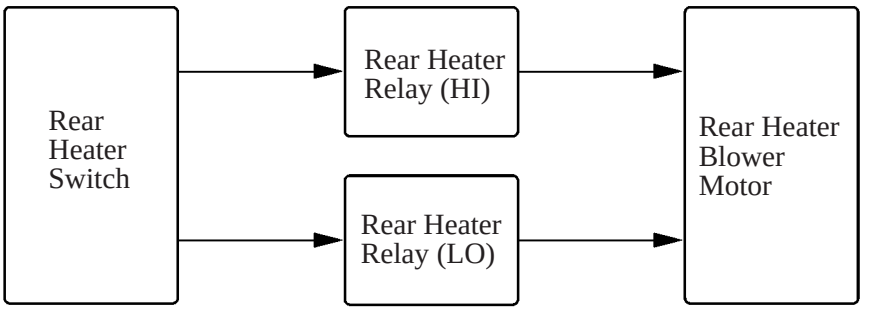

206BE10

3. Layout of Component

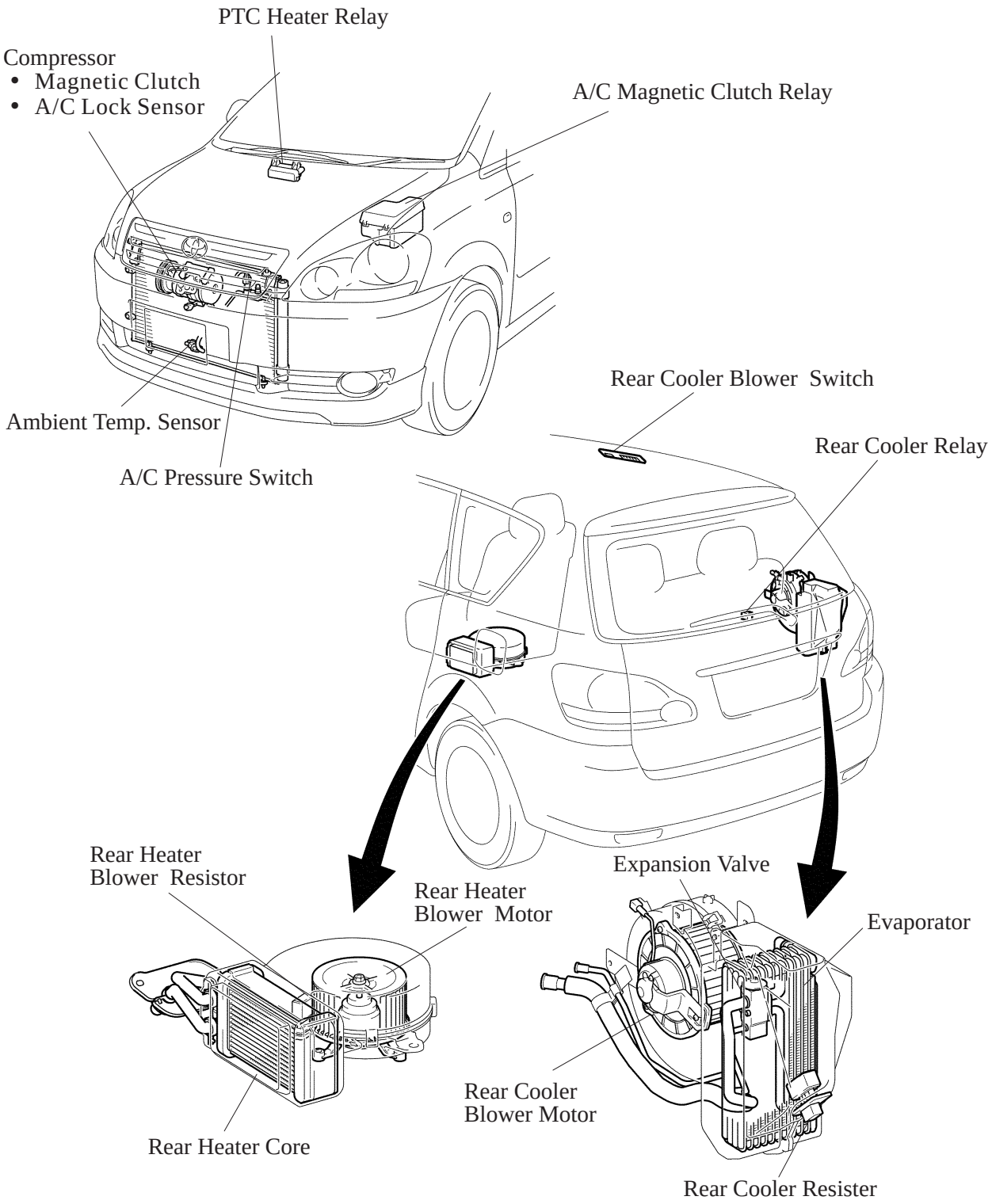

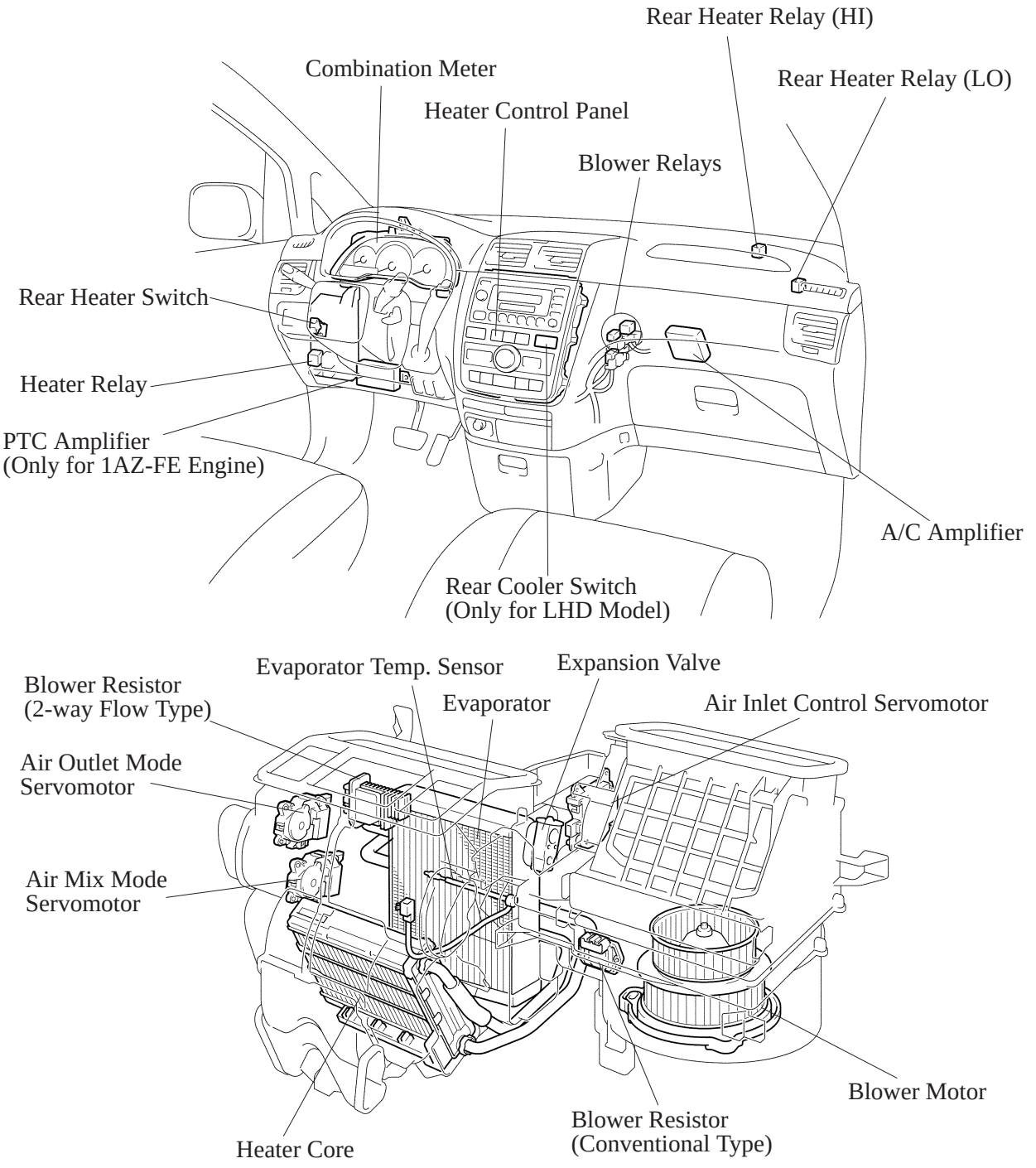
Rear Heater Relay (HI)
Combination Meter
Rear Heater Relay (LO)
Heater Control Panel
Blower Relays
Rear Heater Switch
Heater Relay
PTC Amplifier
(Only for 1AZ-FE Engine)
A/C Amplifier
Rear Cooler Switch
(Only for LHD Model)
Evaporator Temp. Sensor
Expansion Valve
Blower Resistor
(2-way Flow Type)
Evaporator
Air Inlet Control Servomotor
Air Outlet Mode
Servomotor
Air Mix Mode
Servomotor
Blower Motor
Blower Resistor
(Conventional Type)
Heater Core
206BE44

4. Damper Layout

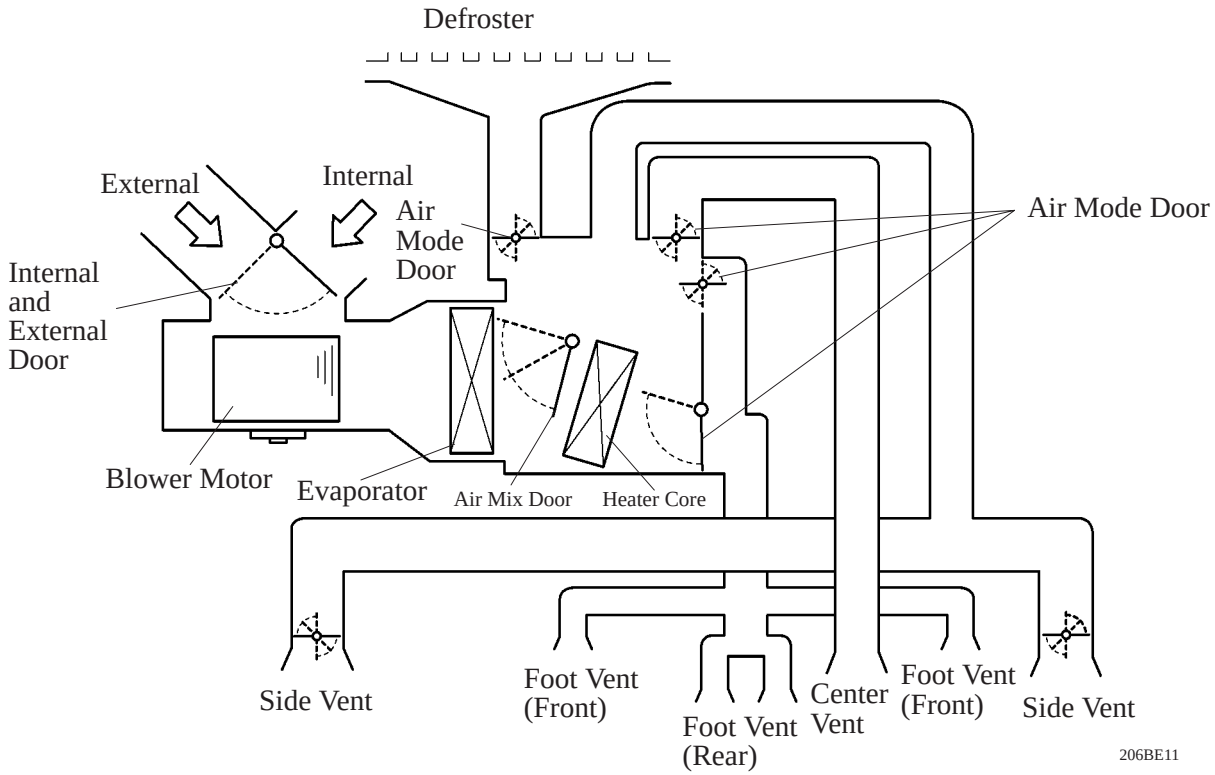

Conventional Type

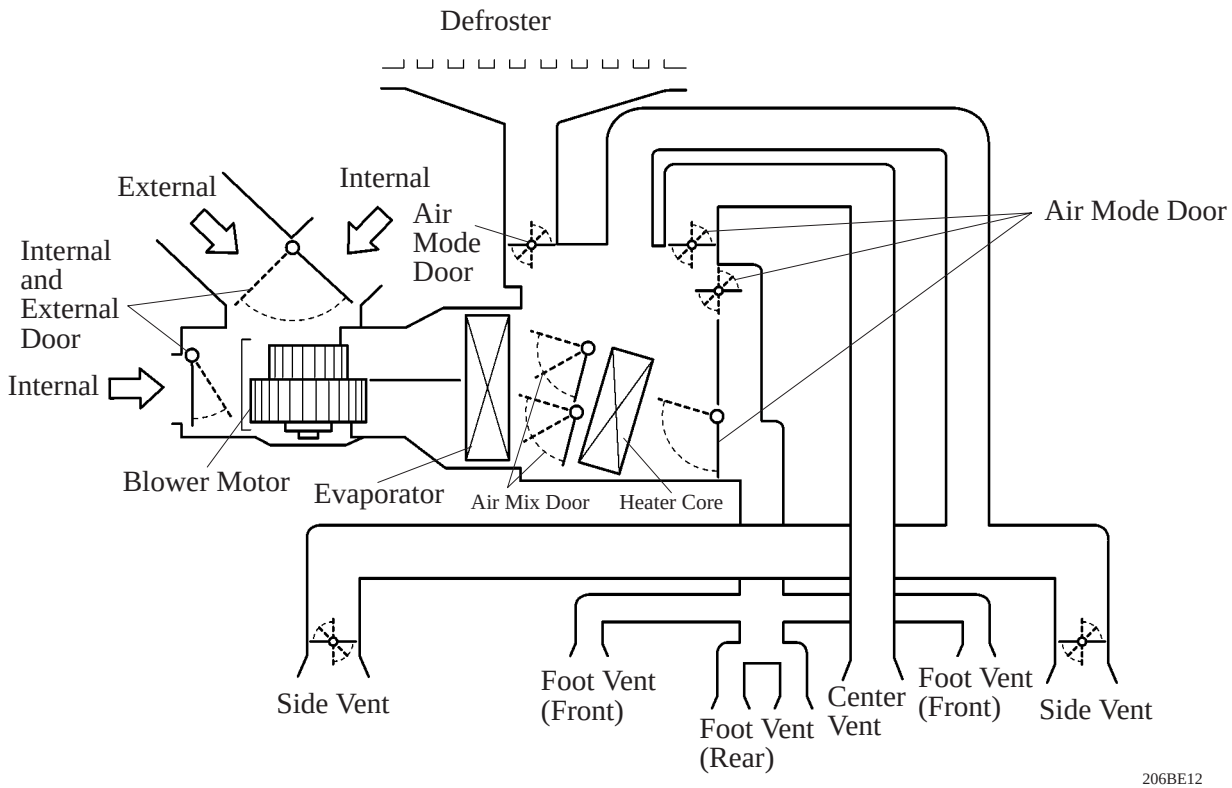

2-Way Flow Type

BE

5. Air Outlets and Air Volume Rations

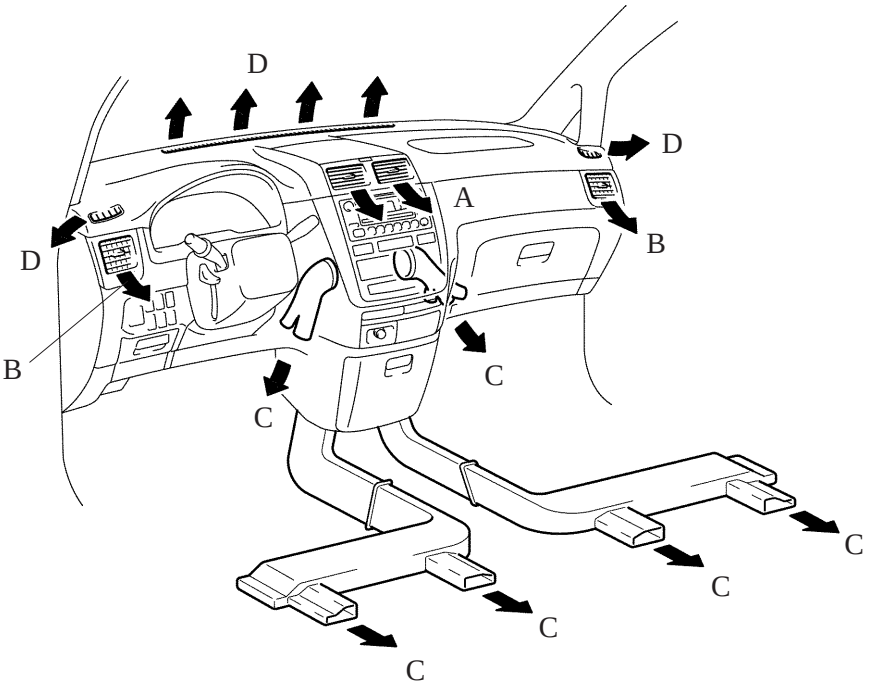

206BE13

Air outlet Mode	A	B	C	D
	Center Vent	Side Vent	Foot Vent	Defroster
FACE 187BE24	◯	◯	—	—
BI-LEVEL 187BE25	○	○	○	—
FOOT 187BE26	—	○	◯	○
FOOT/DEF 187BE27	—	○	○	○
DEF 187BE28	—	○	—	◯

The size of the circle ◯ indicates the proportion of air flow volume.

■CONSTRUCTION AND OPERATION

1. Front Heater Control Panel

The push button type heater control panel is used.
A rear defogger switch with timer (approx. 15 minutes) and a rear cooler switch have been provided on this control panel for ease of operation.

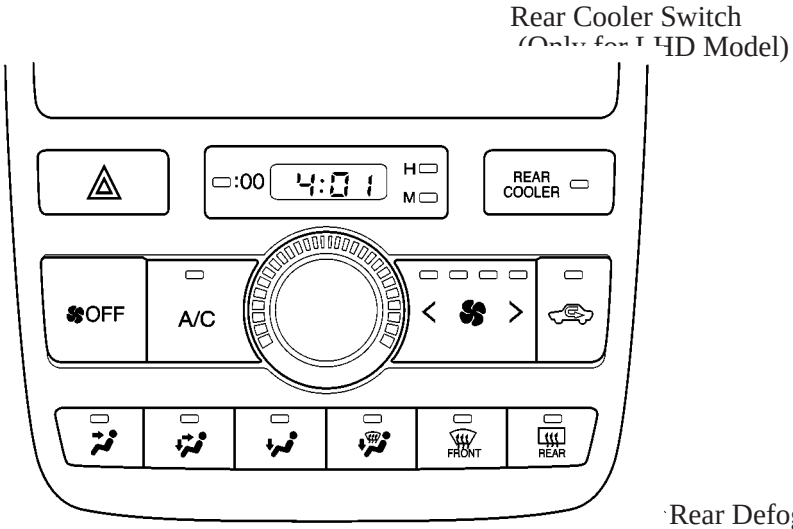

206BE14

2. Rear Cooler Blower Switch

The rear cooler blower switch has been provided at the blower outlet for the second seat. This switch has 4 blower speeds.

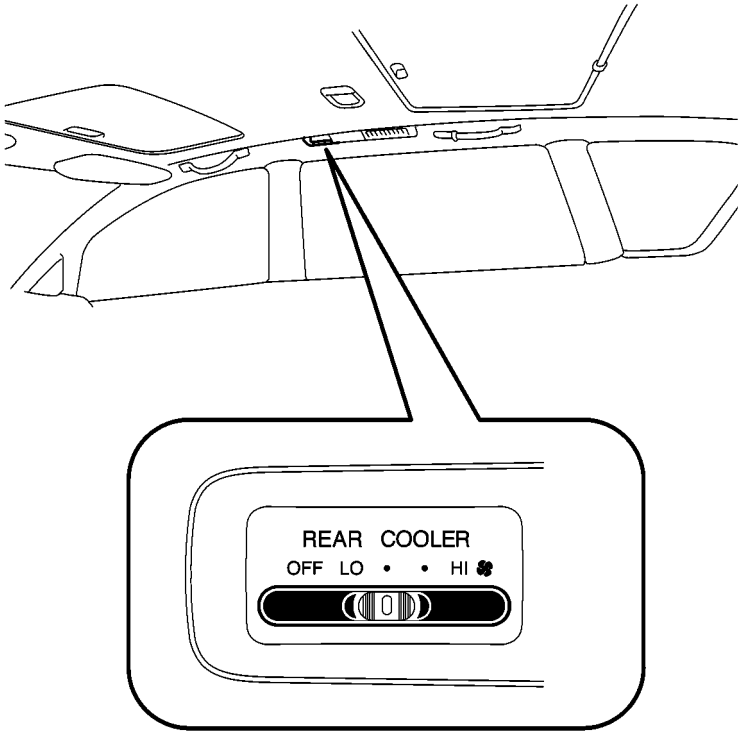

206BE15

BE

3. Rear Heater Switch

The rear heater switch has been provided on the instrument panel. This switch has 2 blower speeds: LO and HI.

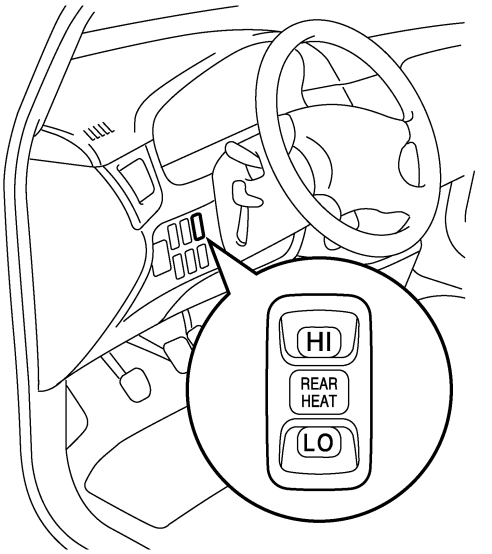

LHD Model 206BE16

4. Front Air Conditioner and Heater Unit

General

- A semi-center location air conditioner and heater unit, in which the multi tank type evaporator and straight flow heater core are placed in the vehicle's longitudinal direction, has been adopted. As a result, air conditioner and heater unit has been made more compact and lightweight than that of the previous model.
- A 2-way flow type air conditioner and heater unit that excels in heating and demisting performance has been provided on the 1CD-FTV engine model for Europe, and on the 1AZ-FE engine LHD model for Europe with cold area specification.
  This unit, which introduces external air and internal air simultaneously, discharges warm internal air to the footwell area, and the fresh, dry external air to the upper area. Thus, it realizes both excellent heating performance and demisting performance.

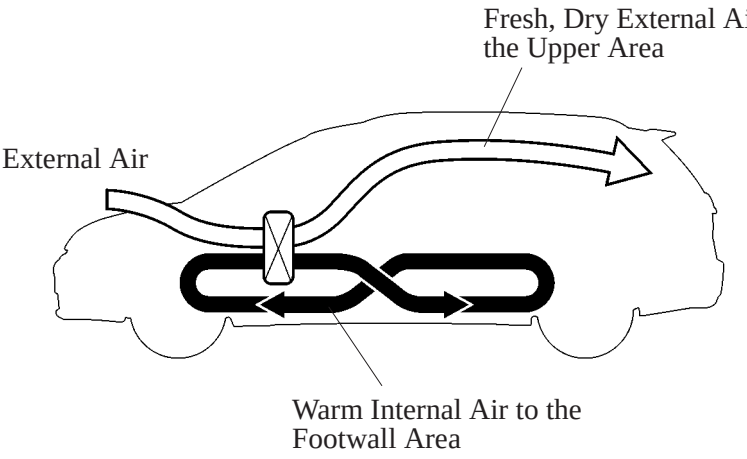

206BE17

2-Way Flow Unit

- A partition plate divides the inside of the air conditioner unit into two parts, the external air passage, and the internal air passage. Thus, by controlling the external and internal air door separately, the external air and internal air are introduced into the cabin in the following three modes: bi-level fresh-air mode, recirculation mode, and bi-level fresh-air/recirculation (2-way flow) mode. In the bi-level fresh-air/recirculation mode, the partition door is closed to prevent the external air and the internal air from intermixing.

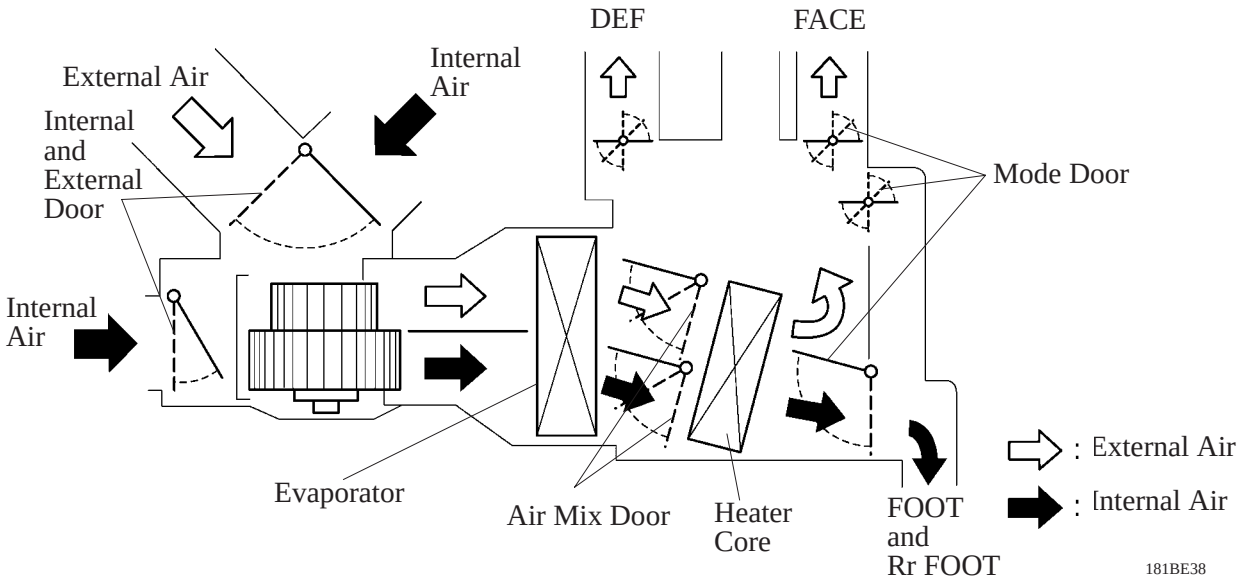

- When all the conditions listed below are met, the external air door, internal air door, and partition door which are controlled by the air conditioner amplifire, are switched to the bi-level fresh-air/recirculation mode.

  a) Flesh-air mode in the selected state
  b) Temperature control switch in the MAX HOT state
  c) Mode select switch in either FOOT or FOOT/DEF state

BE

HEATER CORE

1) General

A compact, lightweight, and highly efficient straight flow (full-path flow) aluminum heater core has been adopted.

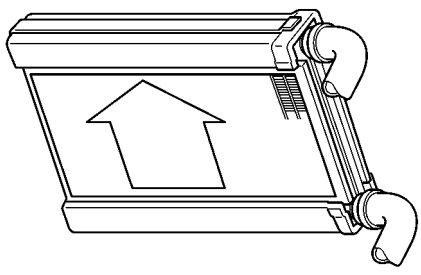

152BE21

Three PTC (Positive Temperature Coefficient) heaters have been provided on the LHD model for Europe with the cold area specification in order to improve heater performance. The heaters have been built into the heater core.

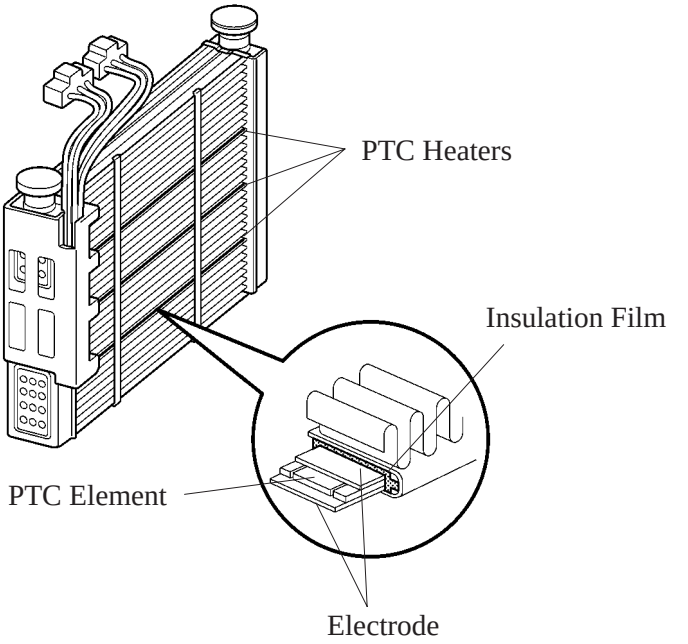

2) Wiring Diagram

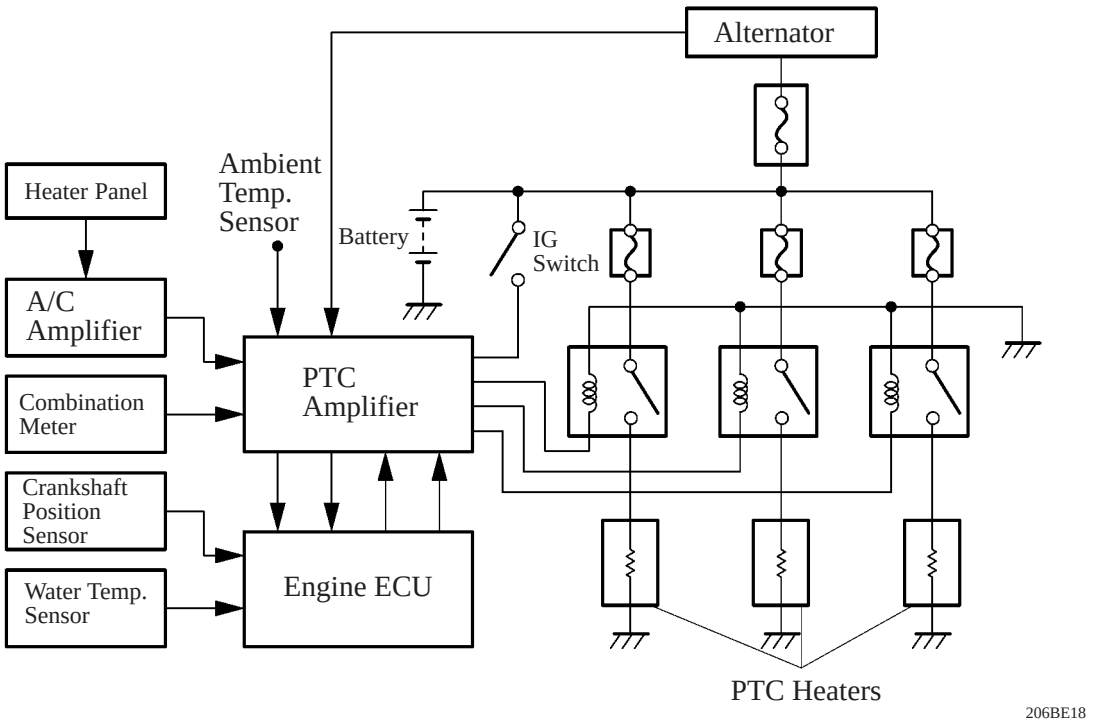

1AZ-FE Engine

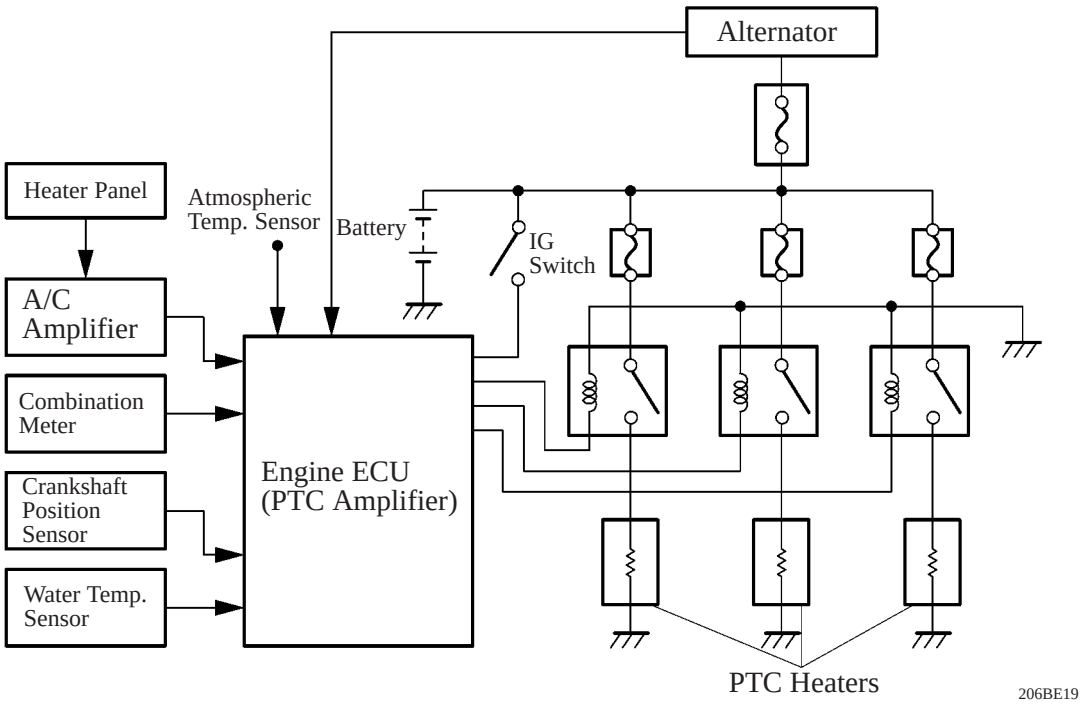

1CD-FTV Engine

3) PTC Heater Operating Condition

The ON/OFF function of the PTC heater is controlled by the PTC amplifier in accordance with the water temperature, ambient temperature, engine speed, temperature setting, and the electrical load (alternator power ratio).
However, on the 1CD-FTV engine model, the PTC amplifier is built into the engine ECU. For example, with water temperature, the number of PTC heater operation varies as shown in the graph below.

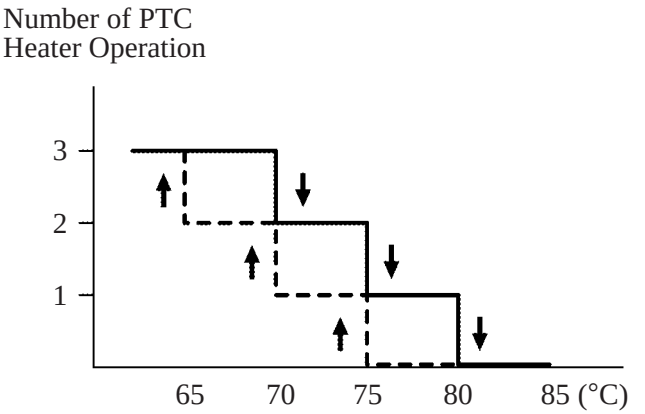

181BE16

Furthermore, the number of PTC heater operation is controlled in a complex manner in accordance with the ambient temperature, engine speed, temperature setting, and the electrical load (alternator power ratio).

Evaporator

By placing the tanks at the top and the bottom of the evaporator unit and by adopting an inner fin construction, the heat exchanging efficiency has been improved and the evaporator unit's temperature distribution has been made more uniform. As a result, it has become possible to realize a thinner evaporator construction. Furthermore, the evaporator body has been coated with a type of resin that contains an antibacterial agent in order to minimize the source of foul odor and the propagation of bacteria.

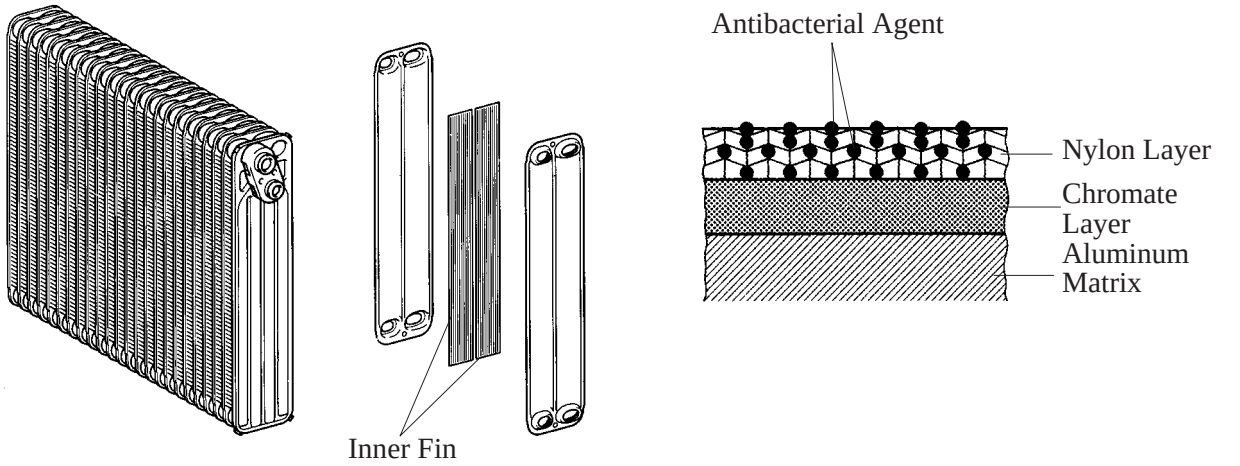

163BE17

5. Condenser

- This condenser has adopted the sub-cool cycle for its cooling cycle system to improve the heat exchanging efficiency.
- A multi-flow condenser and a gas-liquid separator (modulator) have been integrated.
- The multi-flow condenser consists of two cooling portions: the condensing portion and the super-cooling portion.

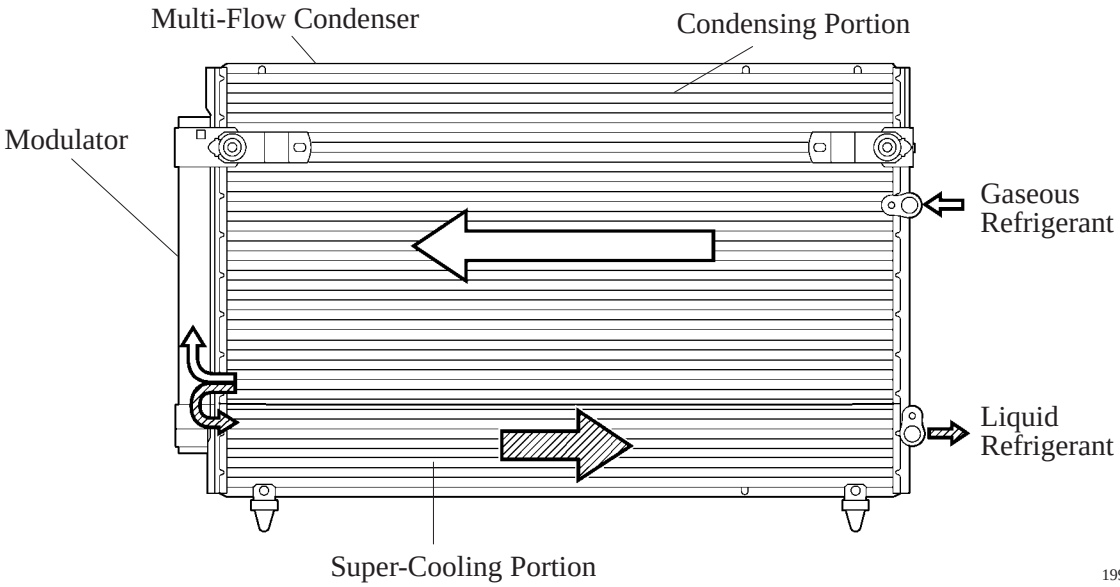

6. Clean Air Filter

A clean air filter that excels in removing pollen and dust is standard equipment.
This filter, which cleans the air in the cabin, is made of polyester. Thus, it can be disposed of easily as a combustible material, a feature that is provided in consideration of the environment.

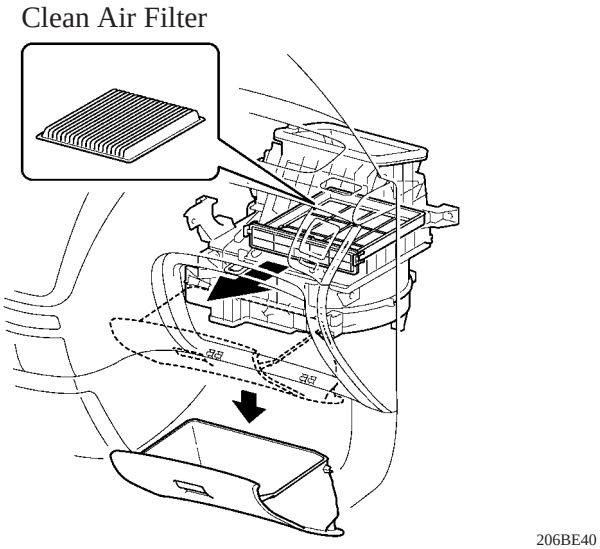

Destination	Replacement Interval
Europe and Australia	Normal: 30,000 km (18,000 mile) Dusty Road: 15,000 km (9,000 mile)
General Countries	Normal: 30,000 km (18,000 mile) Severe: 15,000 km (9,000 mile)

ACCESSORIES

■POWER WINDOW SYSTEM

1. General

The control of the this system is effected by the power window master switch.
This system establishes communication between the power window master switch and the power window switches of the individual doors. It effects control through the ECU that is built into the master switch, which determines the conditions of the switches.

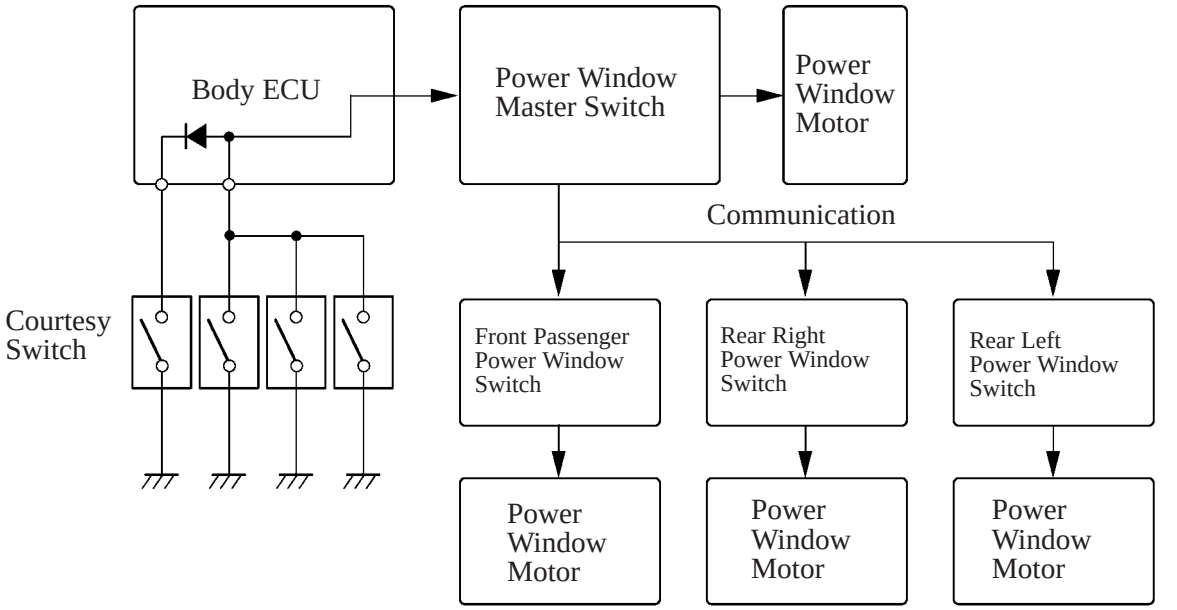

206BE20

2. Layout of Component

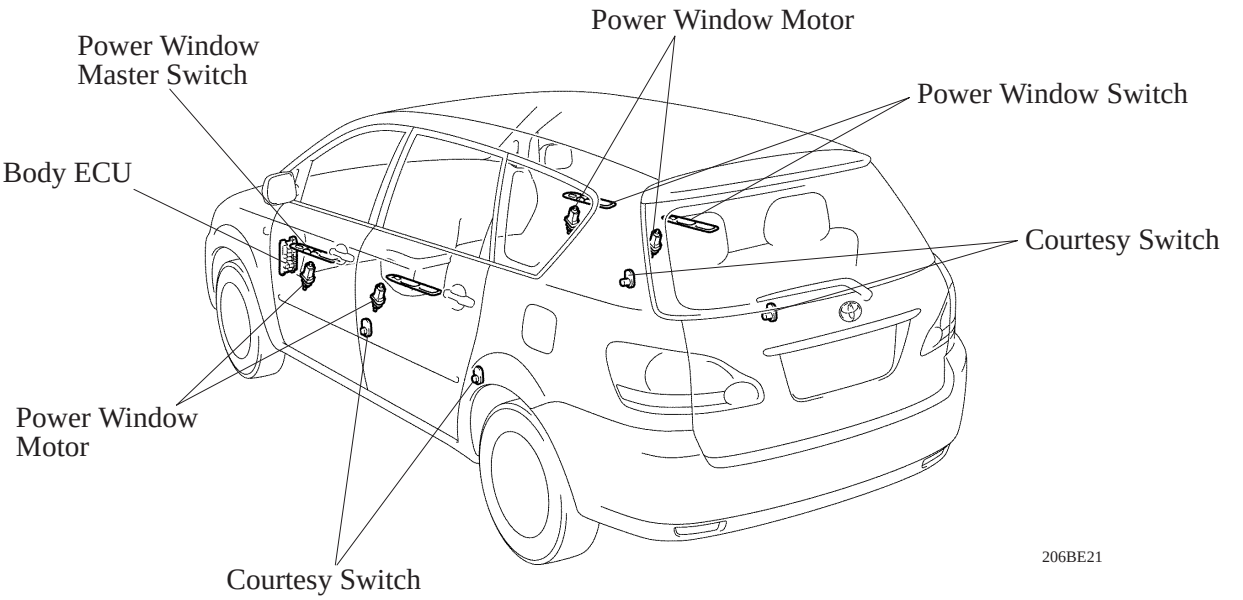

206BE21

3. Function

The power window system has the following functions.

Function	Outline
All-door one-touch auto up-and-down Function	The “all-door one-touch auto up-and-down” function enables the window of any door to be fully opened or closed at a touch of the all power window switches.
Remote Control Function	The up and down operations of the front passenger window and the rear windows can be controlled by operating the power window master switch.
Key-off Operation Function	The door key-off operation function makes it possible to operate the power window for approximately 43 seconds after the ignition switch is turned to the ACC or LOCK position, if the any door is not opened.
Jam Protection Function	A “jam protection” function automatically stops the power window and moves it downward if a foreign object gets jammed in the window during one-touch auto-up operation.

■DOOR LOCK CONTROL SYSTEM

1. General

- This system is controlled by the body ECU. The body ECU outputs signals to the respective door lock motors.
- For improved theft deterrence performance, a double locking system is standard equipment on the RHD models for Europe. Double locking system is controlled by the double lock ECU. This ECU communication with the body ECU.

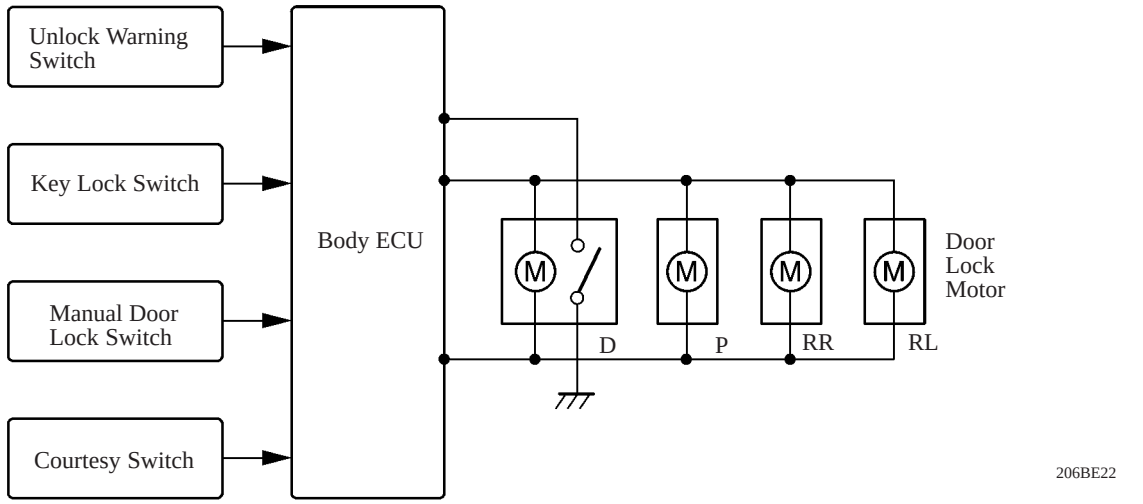

without Double Locking

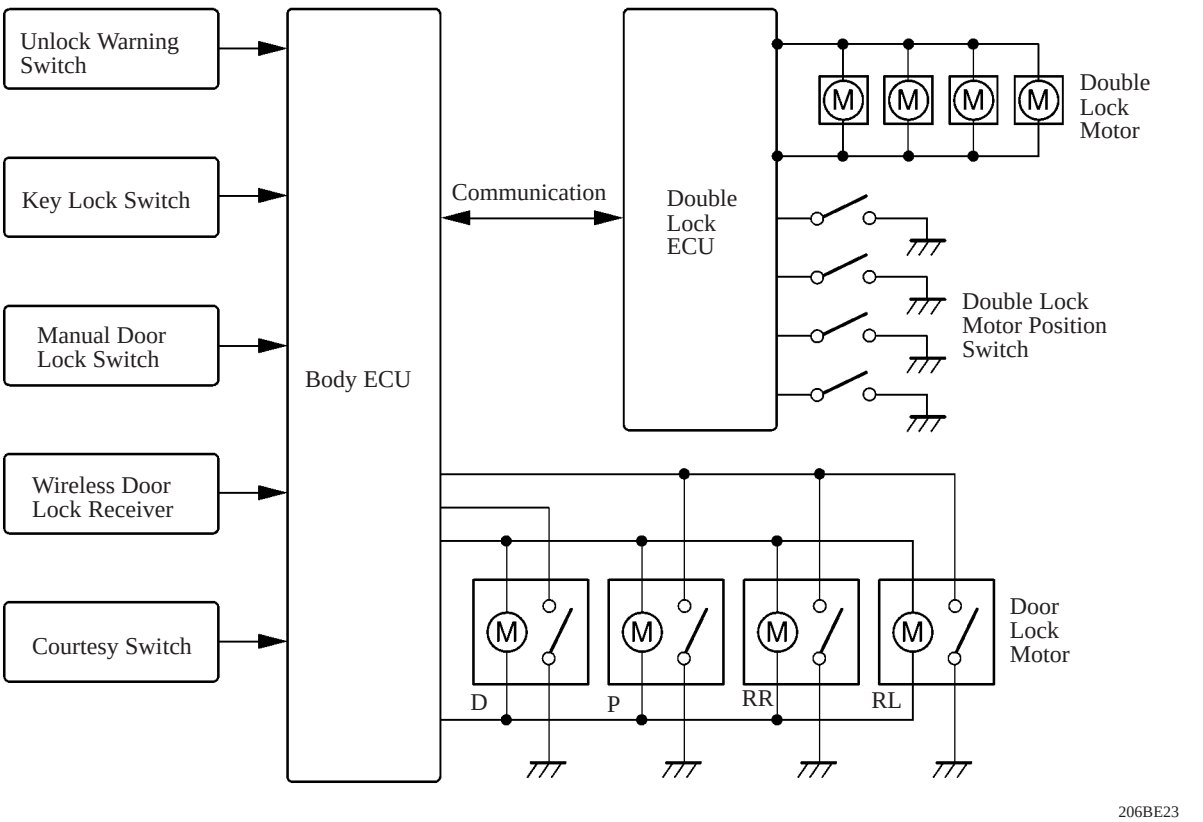

with Double Locking
(RHD Models for Europe)

2. Layout of Component

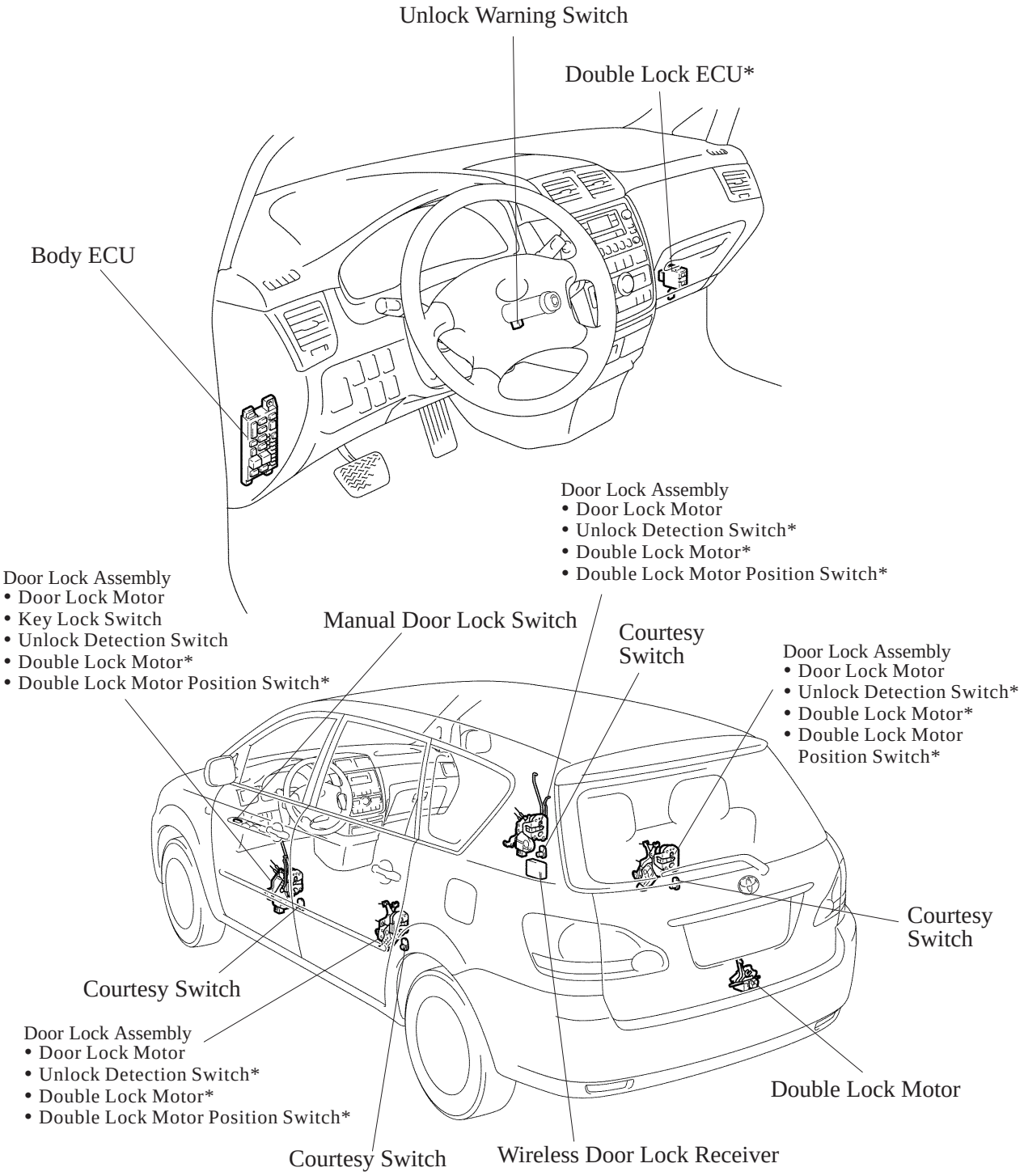

*: with Double Locking System (on the RHD Models for Europe)

BE

3. Function

The door lock control system has the following functions.

Function	Outline
Key-linked lock and unlock function*	This function, which is linked with the driver door key cylinder, can lock or unlock all the doors when a lock or unlock operation is effected.
Key confine prevention function	Provided that the key is inserted in the ignition key cylinder and the driver's door is open, an attempt to lock the door will cause all the doors to unlock.
Manual unlock prohibition function	When a lock operation is effected through wireless door lock remote control, this function prohibits the driver's door lock switches from becoming unlocked.
One-motion	The function which enables the driver to unlock the driver's door by pulling the driver's door inside knob.
Double lock function	• The double locking system also prevents the doors from being opened through the operation of the inside door knobs. Thus, the doors cannot be opened either from the inside or the outside of the vehicle. • To lock the doors with this system, pressing the transmitter's LOCK switch, then pressing it again within 5 seconds activates the double locking system. • However, as an emergency unlocking maneuver, only the driver's door can be unlocked with a key.

*: This function is not available for the model with double locking system.

CAUTION

Never activate the double locking system when there are people in the vehicle because the doors cannot be opened from the inside of the vehicle.
If locking the doors by accident, press "Unlock" button of the transmitter.

■ELECTRONIC BACK DOOR OUTSIDE HANDLE SYSTEM

1. General

This system is provided with a switch on the back door outside handle to unlock the back door electrically. Along with the adoption of this system, the key cylinder and the opener for the back door have been discontinued.
An emergency lever has been provided in case the system does not operate due to a discharged battery or other malfunctions.
This system activates when the following two conditions are met:

- Vehicle speed is 5 km/h less than.
- An unlock signal is input into the body ECU from the respective doors in accordance with the wireless door lock remote control, key, or door lock control.

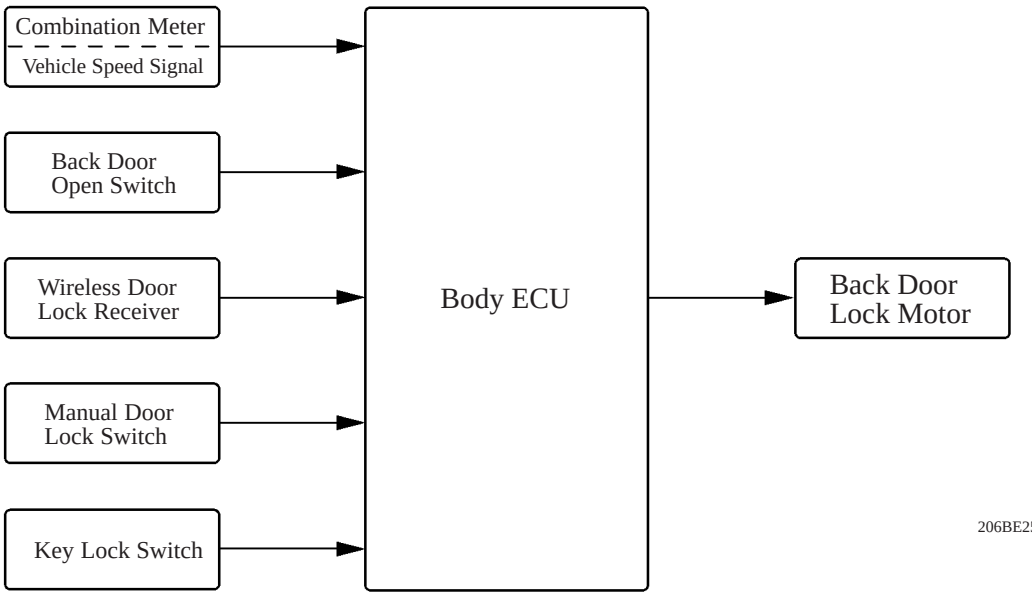

2. Layout of Component

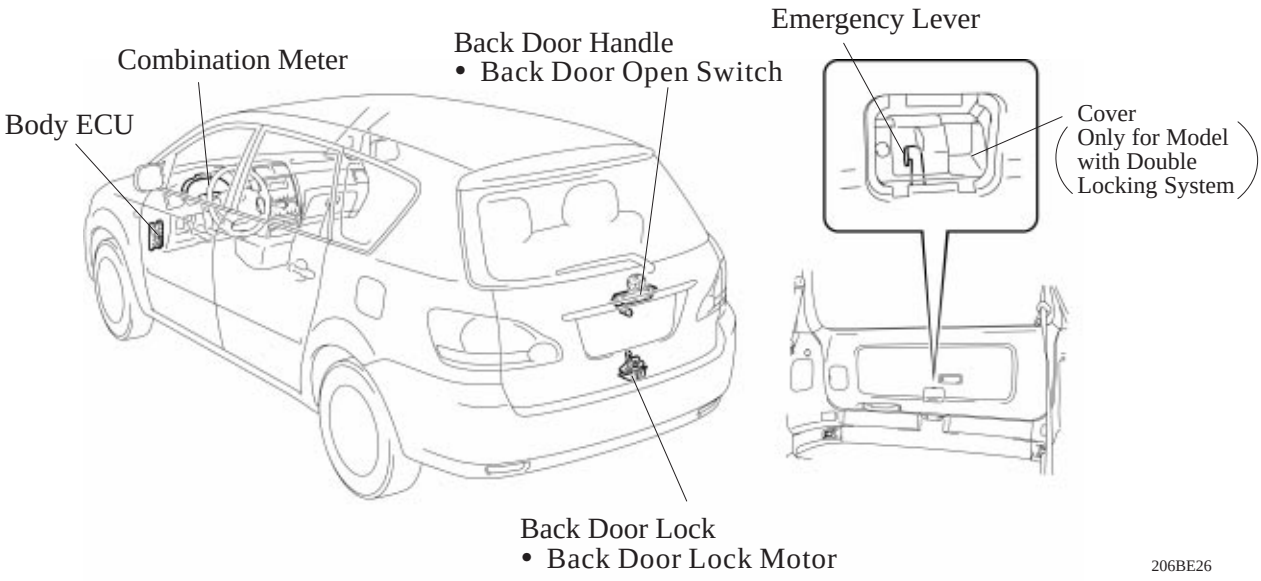

BE

■WIRELESS DOOR LOCK REMOTE CONTROL

1. General

This system is a convenient system for locking and unlocking all the doors, at a distance.
This system is standard equipment in the Avensis Verso/Picnic.

- In this system, the wireless door control receiver performs the code identification process and the body ECU effects the door lock control. Serial data link is provided for communication between the wireless door lock receiver and the body ECU.
- A key-integrated, two-button (lock, unlock) type transmitter has been adopted.
- A rolling code system, in which the signal configuration changes each time when a signal is transmitted by the transmitter, has been adopted.

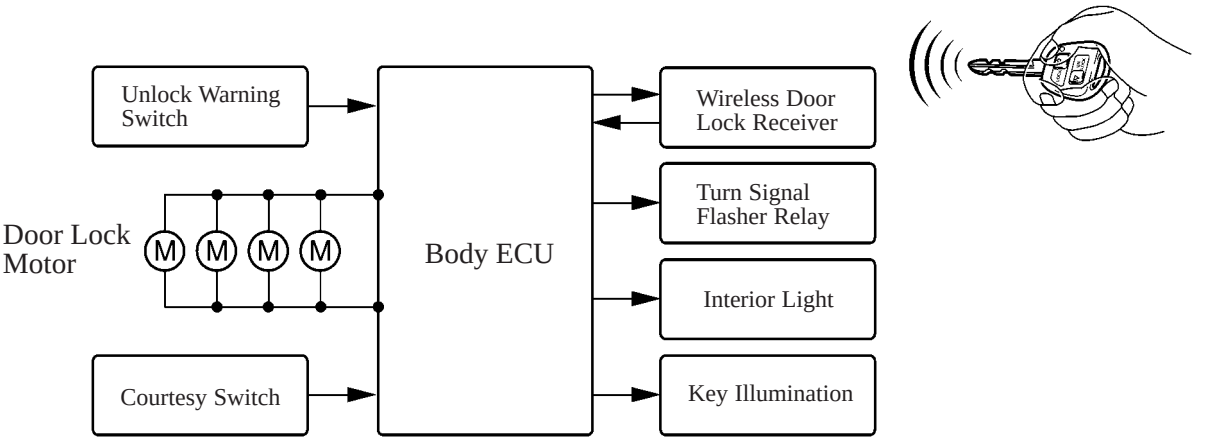

2. Layout of Component

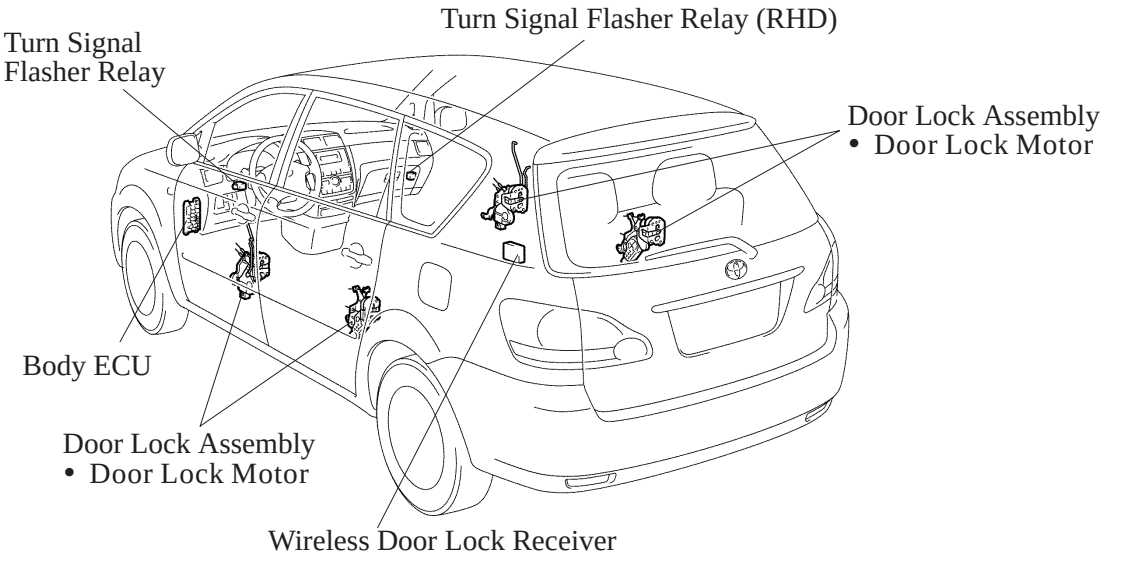

LHD Model

206BE28

Service Tip

In case of making new ignition key due to the loss of it, it is necessary to register recognition code. Refer to the Avensis Verso/Picnic Chassis & Body Repair Manual (Pub. No. RM864E).

3. Transmitter

This transmitter is equipped with an LED display function to monitor the condition of the battery. Furthermore, its construction allows the key molded portion and the transmitter body to be separated completely for improved serviceability.

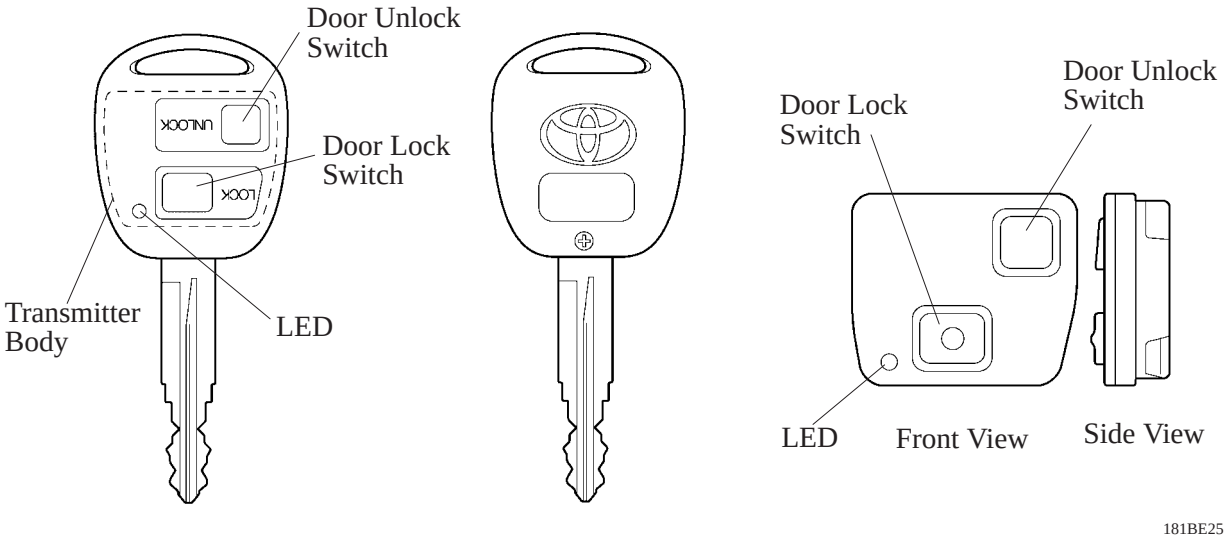

Front Side **Reverse Side** **Transmitter Body**

4. Function

The wireless door lock remote control system in the Avensis Verso/Picnic has the following functions.

BE

Function	Outline
All Doors Lock or Unlock Operation	Pressing the door lock switch or the door unlock switch locks or unlocks all the doors.
Automatic Lock Function	If none of the doors are opened within approximately 30 seconds after they are unlocked by the wireless door lock remote control, all the doors are locked again automatically.
Illuminated Entry Function	The front and rear interior lights and ignition switch light turns on at the same time the doors are unlocked by a transmitter switch operation.
Answer Back Function	The hazard light is flashed once when locking, and the hazard light is flashed twice when unlocking, to inform that the operation has been completed.
Transmitter Switch Misoperation Prevention Function	When an ignition key is in the ignition key cylinder or any of the doors is not closed completely, the wireless door lock remote control is temporarily cancelled to prevent misoperation. However, unlock can be operated when with any door opened.
Security Function	Send an operation signal as a rolling code.
Repeat Function	If no changes occur in the lock condition when the door lock switch is pressed once, this function causes the body ECU to output a lock signal once again.
Transmitter Recognition Code Registration Function	Enables the registering (writing and storing) of 4 types of transmitter recognition code in the EEPROM that is contained in the door control receiver.

■ENGINE IMMOBILISER SYSTEM

1. General

- The engine immobiliaser system is a theft-deterrent system that disables the engine from starting through the use of the ignition key with an ID code that matches the code that is the pre-registered in the vehicle.
- This system adopts a transponder system which uses a transponder chip embedded in the grip of the ignition key. When the coil located around the ignition key cylinder receives the ID code signal transmitted by the transponder chip, the transponder key ECU determines whether or not the ID code matches the code stored in the transponder key ECU.
  However, on the 1AZ-FE engine model, the transponder key ECU is included in the engine ECU.

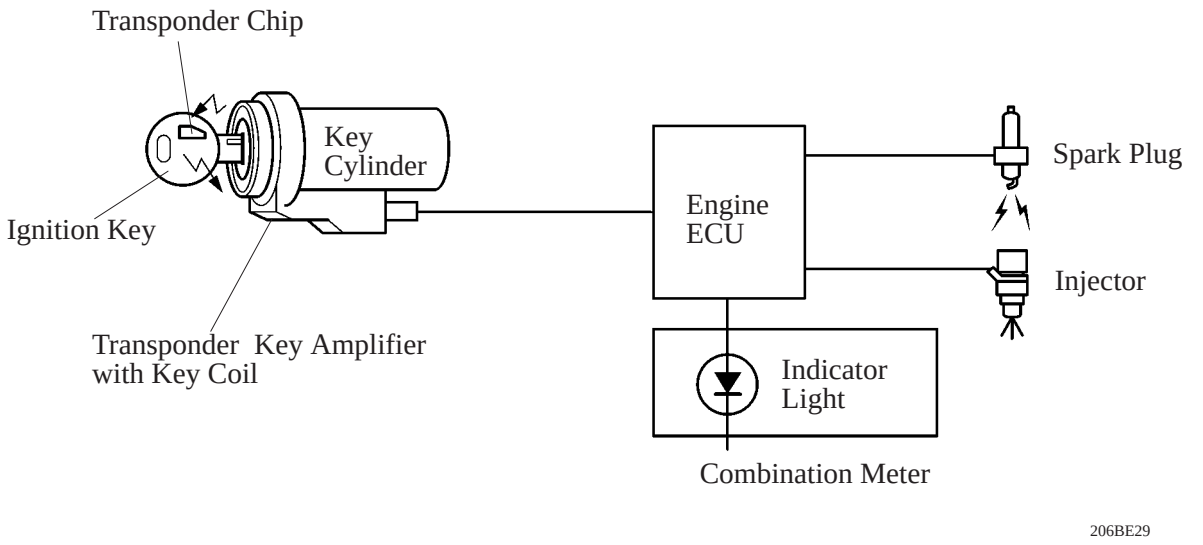

1AZ-FE Engine

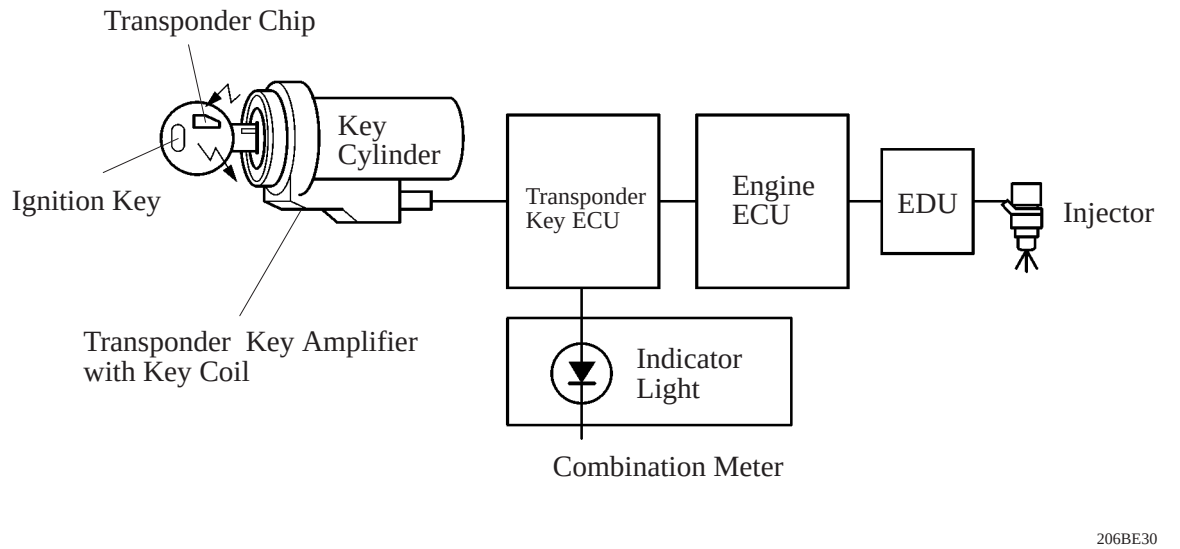

1CD-FTV Engine

2. Layout of Component

The major function parts of the engine immobiliser system are shown below.

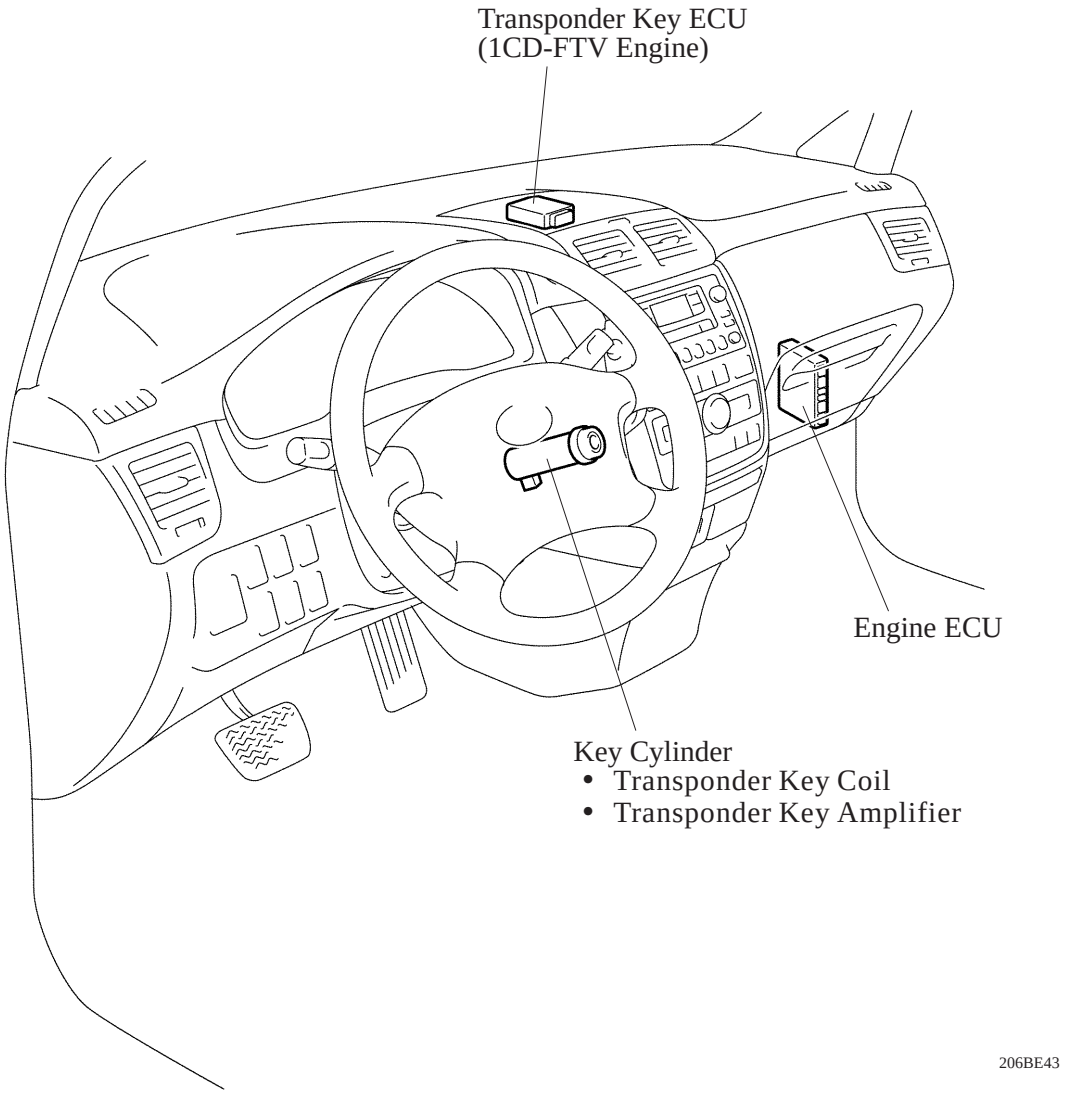

LHD Model

■THEFT DETERRENT SYSTEM

1. General

- This system is optional equipment on the RHD models for Europe.
- The theft deterrent system uses the door lock control system components and some other parts. When somebody attempts to forcibly enter the vehicle or open the engine hood or back door without a key, or when the battery terminals are removed and reconnected, the theft deterrent system sounds the vehicle's horn and self power siren and flashes the hazard lights, and turn on the interior light for approx. 27.5 seconds. to alert.
- The control of this system is effected by the theft deterrent ECU.
- The warning specifications of the this system are listed below.

Warning Method	Interior Light	Illuminates
	Hazard Light	Flashing
	Vehicle Horn	Sounds a warning at approx. 0.25 sec. cycles
	Self Power Siren	Sounds a warning at the cycle of the self-power siren itself
	Door Lock Motor	Locking
Warning Time		Approx. 27.5 sec.

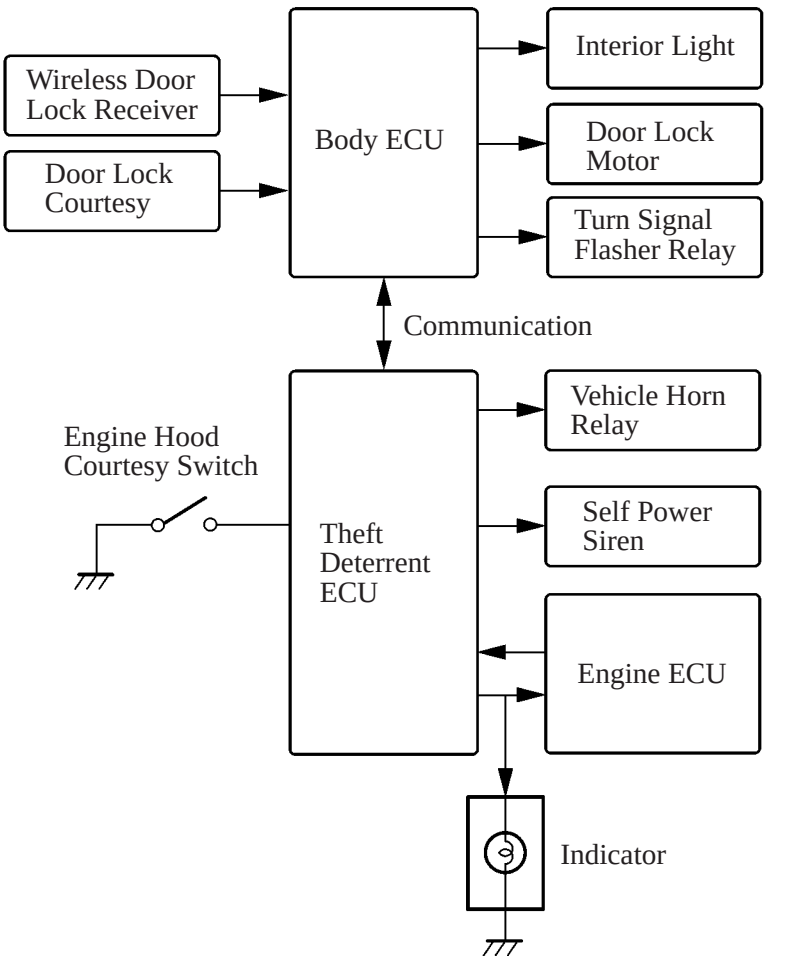

206BE31

2. Layout of Component

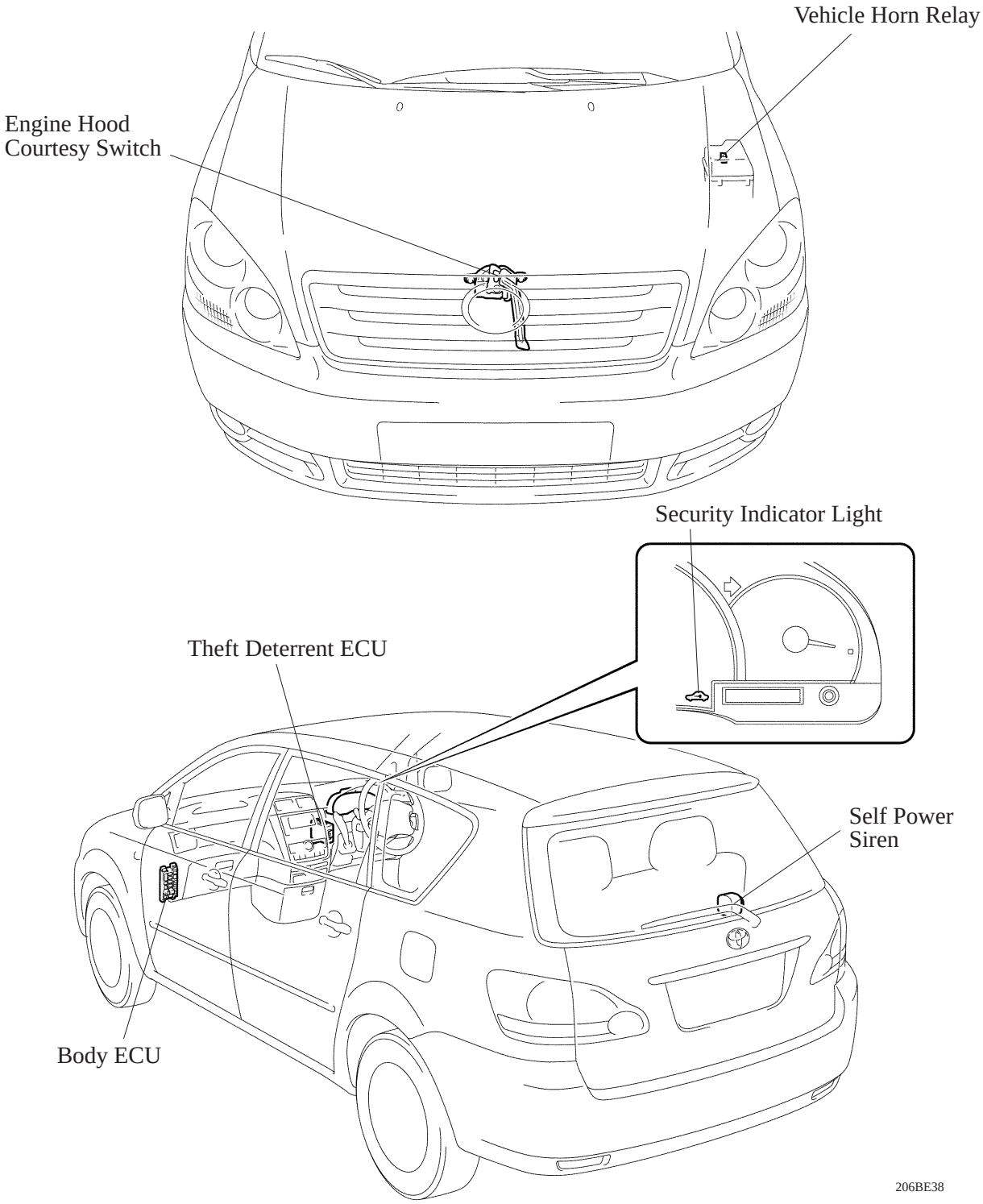

3. System Operation

Basic Operation

This system activates as described in the diagram below when one of items takes place in the respective state.

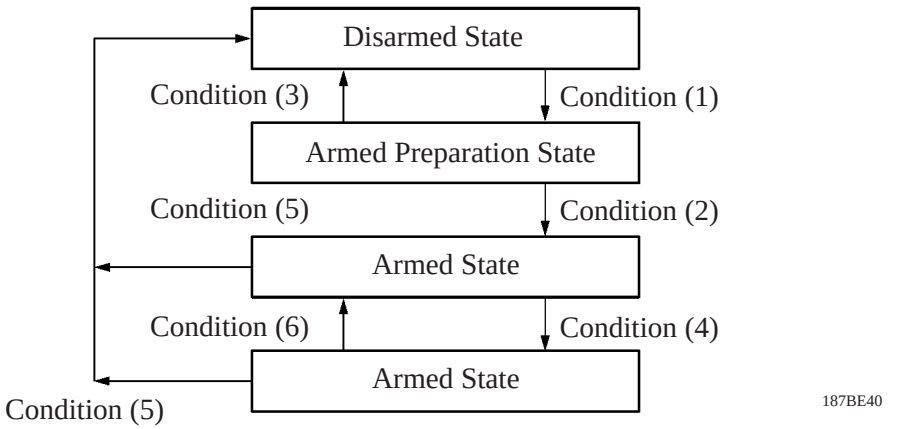

Condition	Item
(1)	When the doors, engine hood, and back door are all closed, the wireless door lock remote control system is used to lock all doors.
(2)	When the doors, engine hood, and back door are all closed and locked, and 30 seconds have elapsed.
(3)	• When one of the doors, engine hood, or back door is changed from “close” to “open”. • When one of the doors, engine hood, or back door is changed from “lock” to “unlock”. • When the ignition key is inserted in the key cylinder. • When a terminal is disconnected from the battery and re-connected.
(4)	• Any door, engine hood, or back door is opend. • The ignition key or the wireless door lock remote control system other than the transmitter is used for unlocking. • The engine hood is opened. • A terminal is disconnected from the battery and re-connected. However, the self power siren will sound by the built-in battery at the same time when the battery is removed. • The wiring harness is directly connected as if to turn the ignition switch ON.
(5)	The transmitter of the wireless door lock remote control system is used to unlock the doors.
(6)	After approximately 27.5 seconds of the alarm time have elapsed.

■SRS AIRBAG SYSTEM

1. General

- The SRS (Supplement Restraint System) airbags are standard equipment for the driver and front passenger seats. The SRS airbags help to reduce injuries mainly to the driver's or front passenger's head or chest in the event of a frontal impact collision as supplements to the seat belts.
- This system is a 3-sensor type airbag system to detect the impact during a front collision using the airbag sensor assembly and two front airbag sensor assemblies, and to make the airbag system and seat belt pretensioner operate as well.
  The SRS side and curtain shield airbags are optional equipment for the driver and front passenger seats. The SRS side and curtain shield airbags have been designed to help reducing the impact energy that is transmitted to the driver and front passenger in the event of a side collision.
  In a side collision, side and curtain shield airbag sensor assembly detects a shock and deploys the side and curtain shield airbags, if the side-to-side shock is greater than a specified value.
- This system has adopted a fuel cut control that stops the fuel pump when the airbag is deployed at the front or side collision.
- The diagnosis system of the SRS airbag has adopted the M-OBD (Multiplex On-Board Diagnosis).
- The method for clearing (using service wire) the DTCs (Diagnosis Trouble Codes) has been changed.

▶ Wiring Diagram ◀

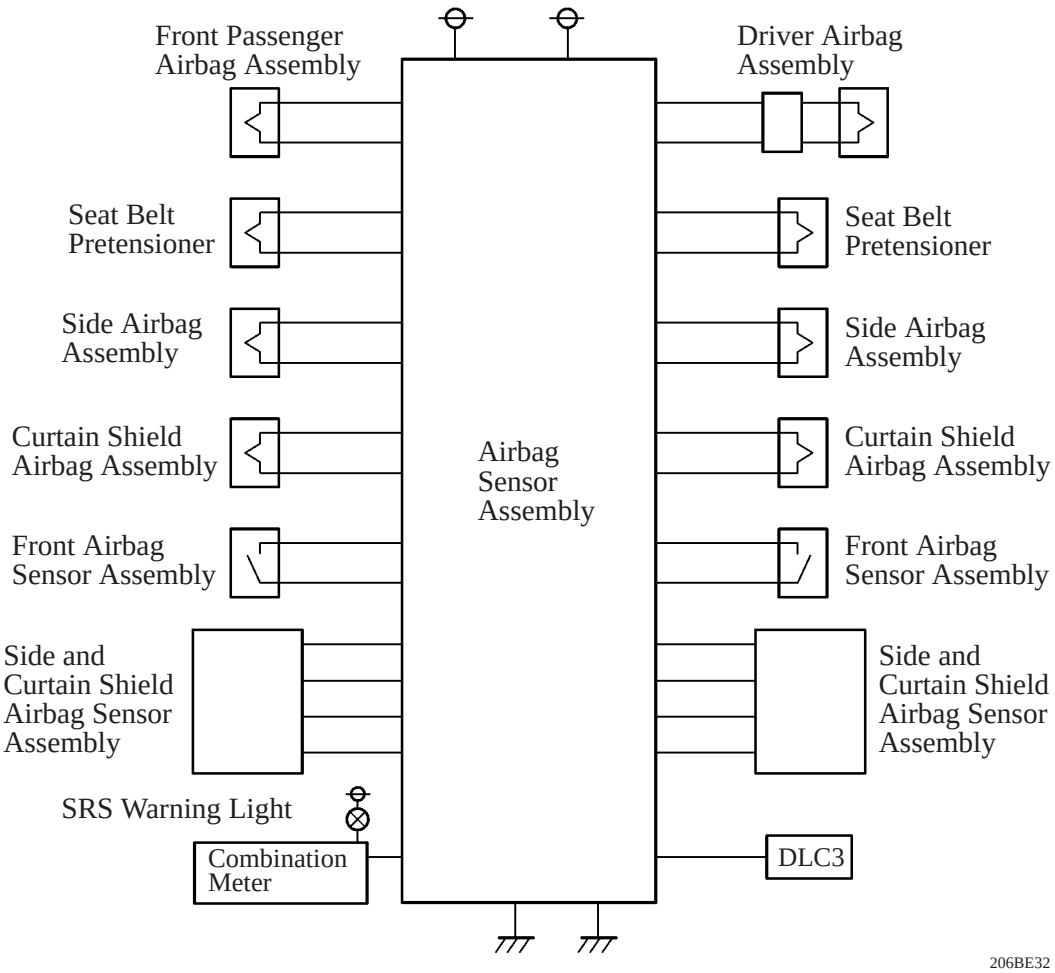

BE

2. System Operation

▶ Front Airbag Operation ◀

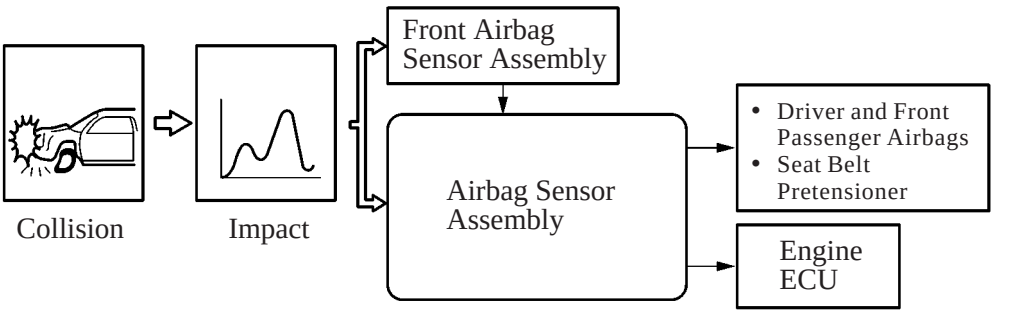

206BE33

▶ Side Airbag Operation ◀

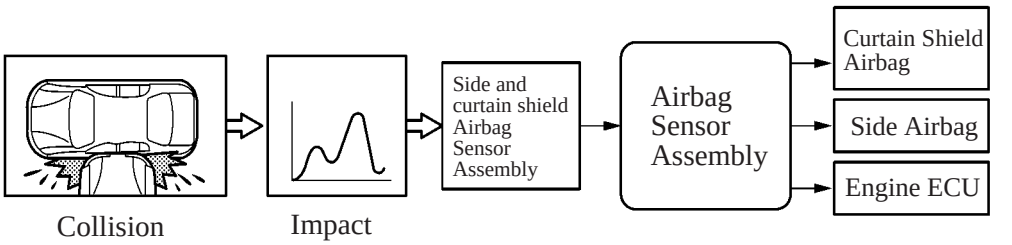

206BE34

3. Layout of Component

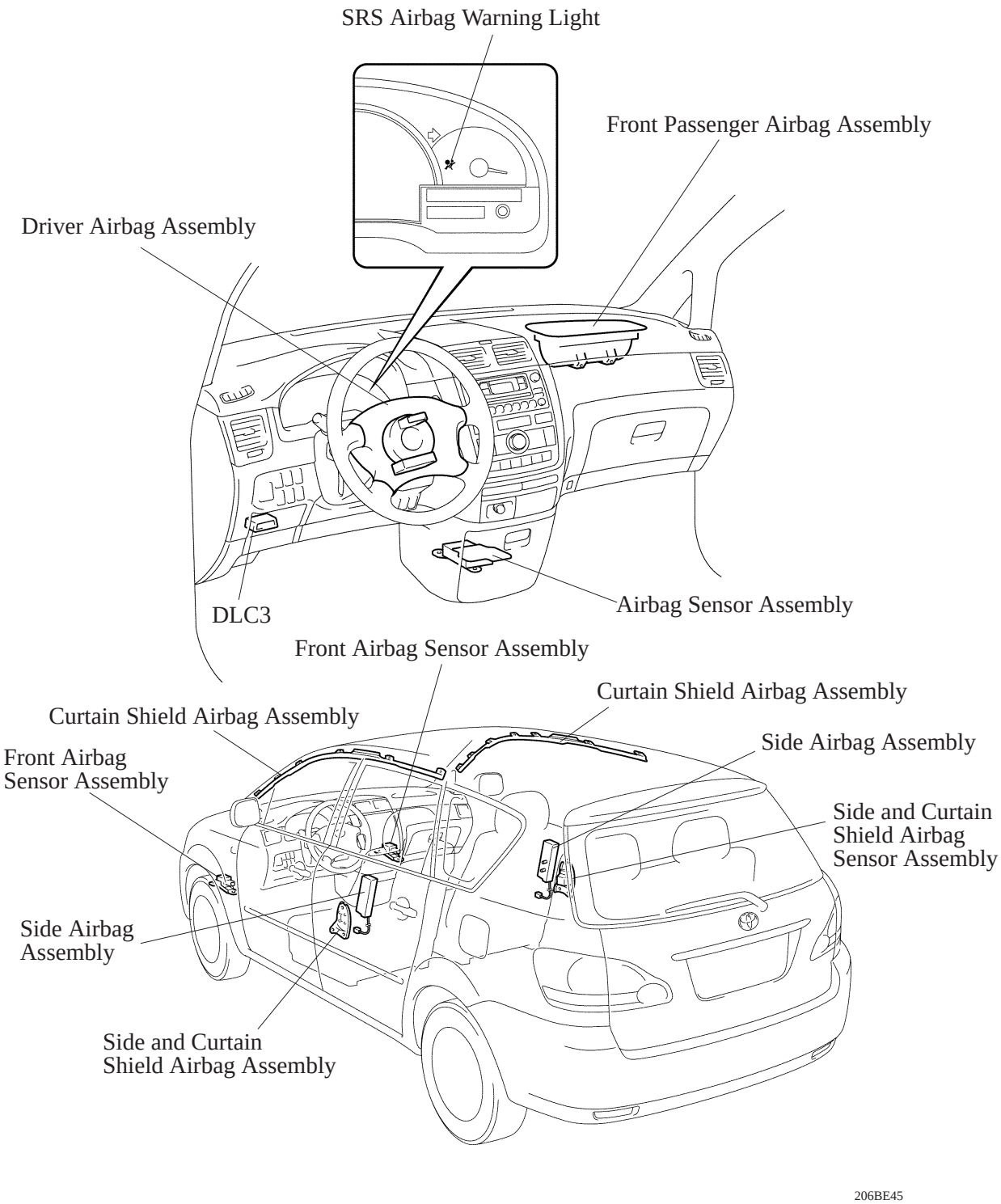

4. SRS Curtain Shield Airbag

The inflation for this SRS curtain shield airbag is enclosed in the diffuser pipe and located in the roof side rail.

➡ : **Compressive Gas**

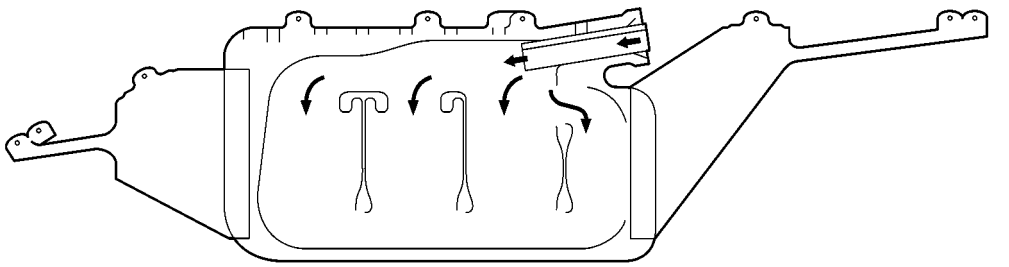

206BE35

5. Diagnosis System

M-OBD (Multiplex On-Board Diagnosis) can output 5-digit DTCs (Diagnostic Trouble Codes) to the hand-held tester. For details on the DTC chart, refer to the Avensis Verso/Picnic Chassis & Body Repair Manual (Pub. No. RM864E).
In addition, the following changes have been made:

- The check connector has been discontinued, and a DLC3 has been newly provided.
- The method for outputting and clearing the DTCs have been changed.

Service Tip

DTC Output and Clear (Using not hand-held tester)

1. Present Troubles Codes output:
   a) Turn the ignition switch to the ON position and wait for approx. 20 seconds.
   b) Using SST, connect the terminals Tc and CG of the DLC3.
   SST 09843-18040

   NOTICE:
   Pay due attention to the terminal connecting position to avoid malfunction.

   c) Read the 2-digit DTC as indicated by the number of times the SRS warning light blinks.
2. Past troubles codes output:
   a) Using SST, connect the terminals Tc and CG of the DLC3.
   SST 09843-18040
   b) Turn the ignition switch to the ON position and wait for approx. 20 seconds.

   NOTICE:
   Pay due attention to the terminal connecting position to avoid malfunction.

   c) Read the 2-digit DTC as indicated by the number of times the SRS warning light blinks

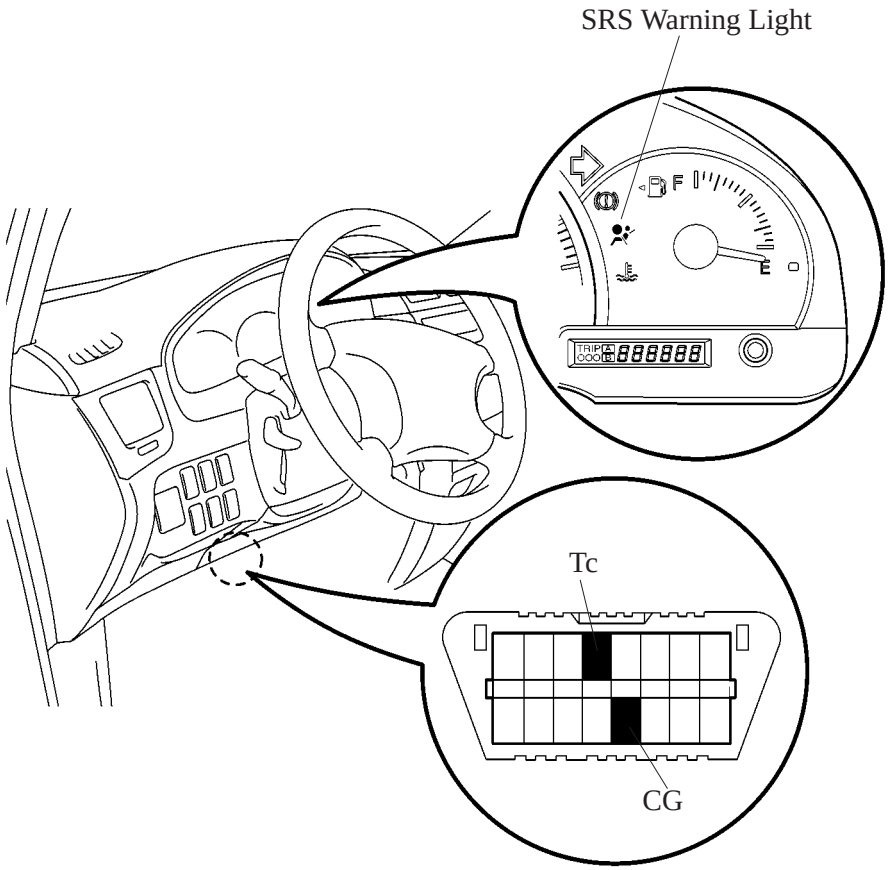

DLC3

206BE39

3. DTC clear: (Present and past trouble codes)
   The DTCs are cleared by opening and shorting the Tc and CG (or ground) terminals of the DLC3 in accordance with the timing chart shown below.

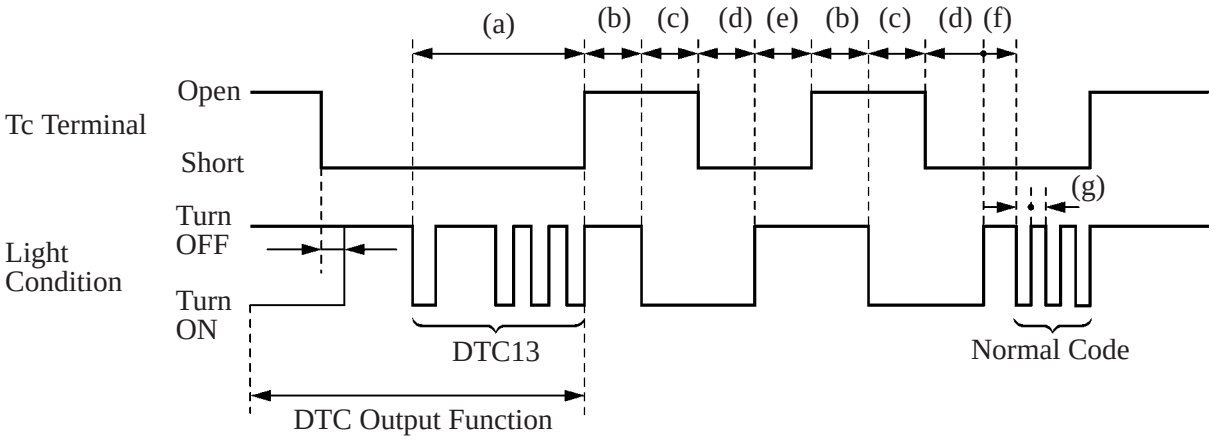

206BE36

	Required Value	Tolerance	Description
(a)	Max. 10 sec.	–	The length of time from when the DTC output starts until the system transfers to the clearance judgment mode.
(b)	3.0 sec.	10 %	The length of the time from when the change of the Tc terminal from short to open has been recognized, until the SRS warning light turn ON.
(c)	3.0 sec.	2.0 sec.	The length of time from when the SRS warning light turn ON, until the change of the Tc terminal from open to short has been recognized.
(d)	3.0 sec.	10 %	The length of time from when the change of the Tc terminal from open to short has been recognized, until the SRS warning light turns OFF.
(e)	3.0 sec.	2.0 sec.	The length of time from when the SRS warning light turn OFF, until the change of the Tc terminal from short to open has been recognized.
(f)	Max. 1.0 sec.	–	The length of time for executing the clearing of DTCs.
(g)	0.25 sec.	10 %	The length of time the normal code is output.

DTC Output and Clear (Using hand-held tester)

1. Hook up the hand-held tester to the DLC3.
2. Read the DTCs by following the prompt on the tester screen.
3. Clear the DTCs by following the prompt on the tester screen.

Please refer to the hand-held tester operator's manual for further details.

■SEAT HEATER

This system is optimal equipment on the LHD models for Europe.
The seat heater system improves the comfort of the driver and the front passenger in a cold weather by heating the surface of the seats.
It is a 2-mode control type that provides a switch.

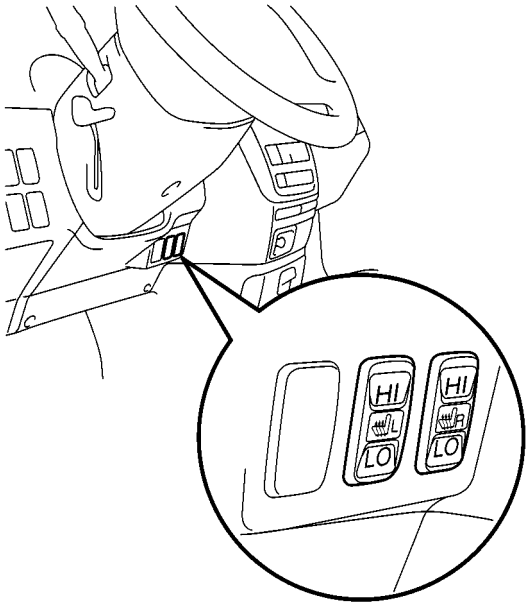

206BE37

■OUTSIDE REAR VIEW MIRROR SYSTEM

This system is enables mirror angle to be adjusted by a switch operation is provided.
Also, an internal heater that operates in conjunction with the rear window defogger is optional equipment on the RHD model for Europe, and on the LHD model for Europe with the cold area specification.
The rear window defogger is controlled by the front heater control panel.

■TWIN MOON ROOF SYSTEM

This system is optional equipment on all the models.
Twin moon roof consists of a manual tilt-up type front moon roof and a power sliding type rear moon roof.

■HEADLIGHT CLEANER

This system is optional equipment on some of the LHD models for Europe.
The headlight cleaner sprays windshield washer fluid onto the headlights to clean the lens.

BODY

BODY STRUCTURE

■LIGHTWEIGHT AND HIGH RIGID BODY

1. High Strength Sheet Steel

High strength sheet steel has been used in order to ensure body rigidity and realize a lightweight body.

: High Strength Sheet Steel

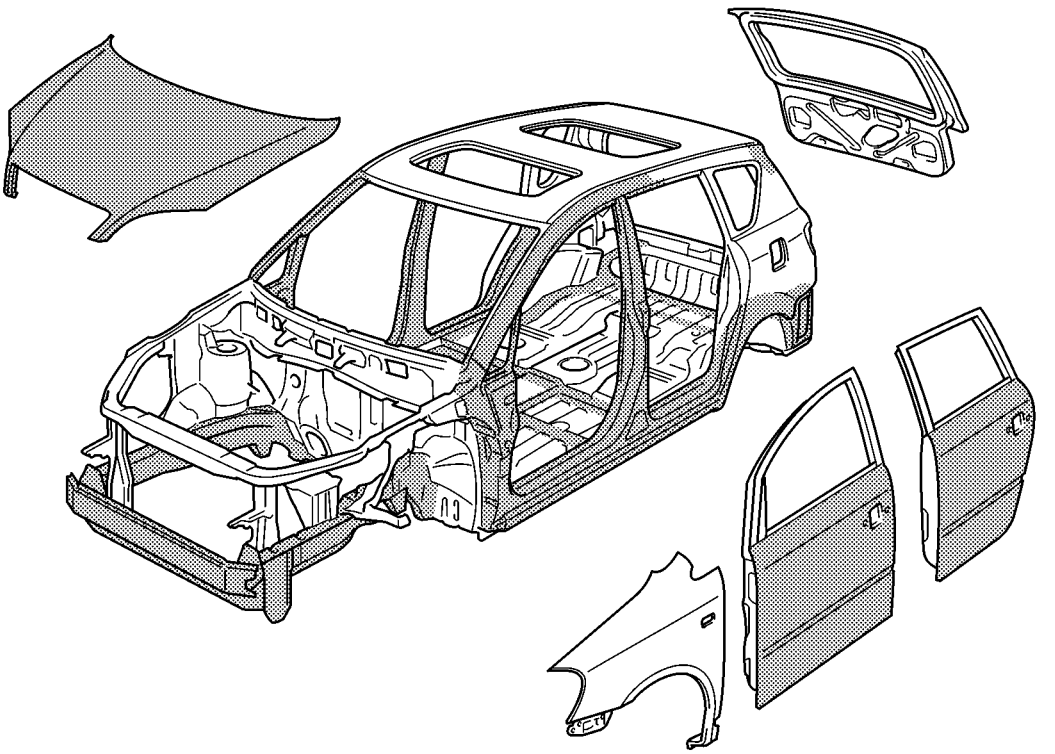

206BO01

2. Body Shell

- The thickness of the upper sheet steel of the quarter pillar reinforcement has been increased to improve body rigidity.
- The rear pillar reinforcement has adopted a three-way split construction, and by increasing thickness of only the upper and lower sheet steel, both weight reduction and high rigidity have been realized.
- Gusset has been placed on the right side quarter wheel housing to ensure body rigidity.
- A plate has been provided in the rocker area to ensure body rigidity.

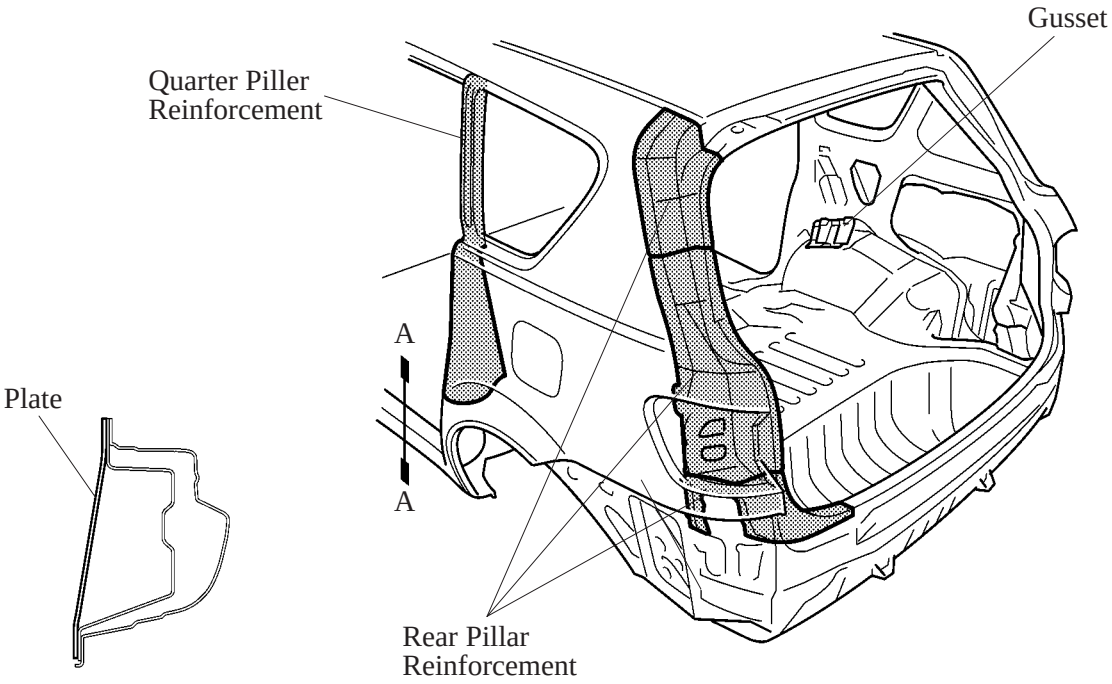

A – A Cross Section

206BO02

■SAFETY FEATURES

1. General

The impact absorbing structure of the new Avensis Verso/Picnic can effectively help absorb the energy of impact in the event of a front, side, or rear collision. This structure also realizes high-performance occupant protection through the use of reinforcements and members that help to minimize cabin deformation.

2. Impact Absorbing Structure for Frontal Collision

- The right and left side members are joined by a cross member, and the rear ends of the side members are connected to the rocker, thus creating a structure that absorbs the impact by dissipating the energy to both sides.
- Differential-thickness sheet steel is used at the front end of the front side members. The thinner front portion and the thicker rear portion enable the front end of the side members to collapse efficiently in order to effectively absorb the impact energy.
- Reinforcement has been established in the rocker area to ensure body rigidity.
- Reinforcement has been provided in the front area of the roof to help minimize cabin deformation.

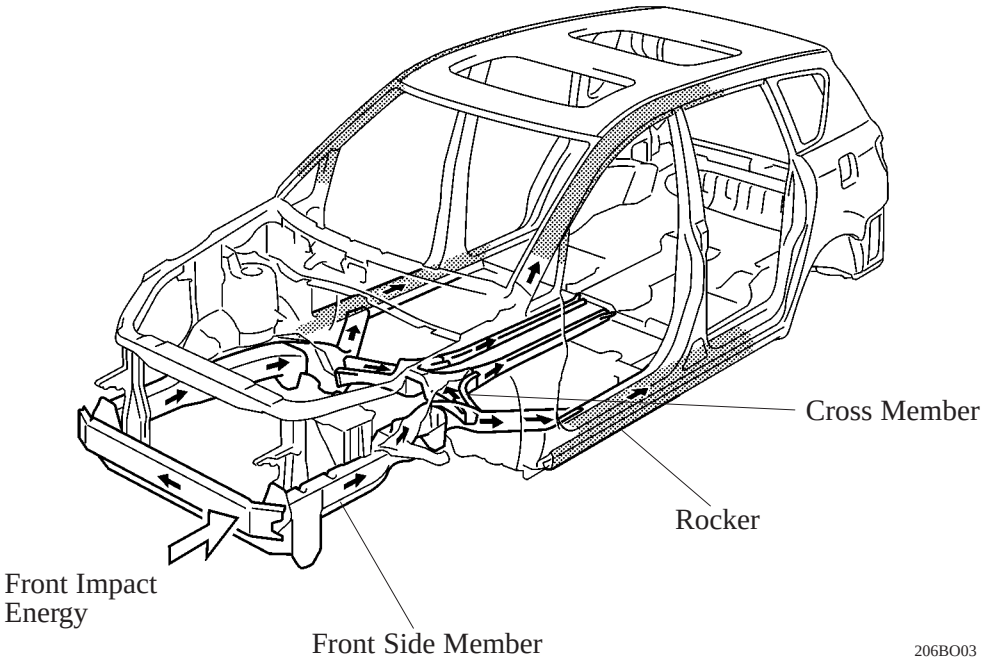

3. Impact Absorbing Structure for Rear Collision

- Differential-thickness sheet steel is used at the rear end of the rear side members and rear side member plates. The thicker front portion and the thinner rear portion enable the rear end of the side members and rear side member plates to collapse efficiently in order to effectively absorb the impact energy.
- Two cross members have been provided at the rear side members to prevent the side members from opening outward during a collision, thus helping to minimize cabin deformation.

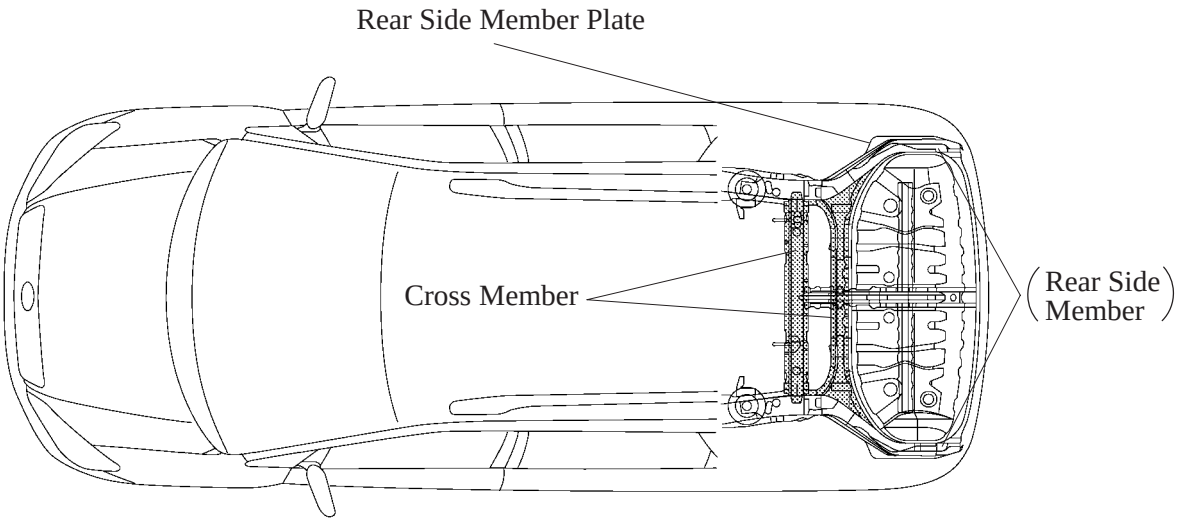

206BO04

4. Impact Absorbing Structure for Side Collision

- A cross member has been provided directly below the center pillar to dissipate the impact energy.
- The thickness of the upper sheet steel of the center pillar reinforcement has been increased to increase body rigidity.

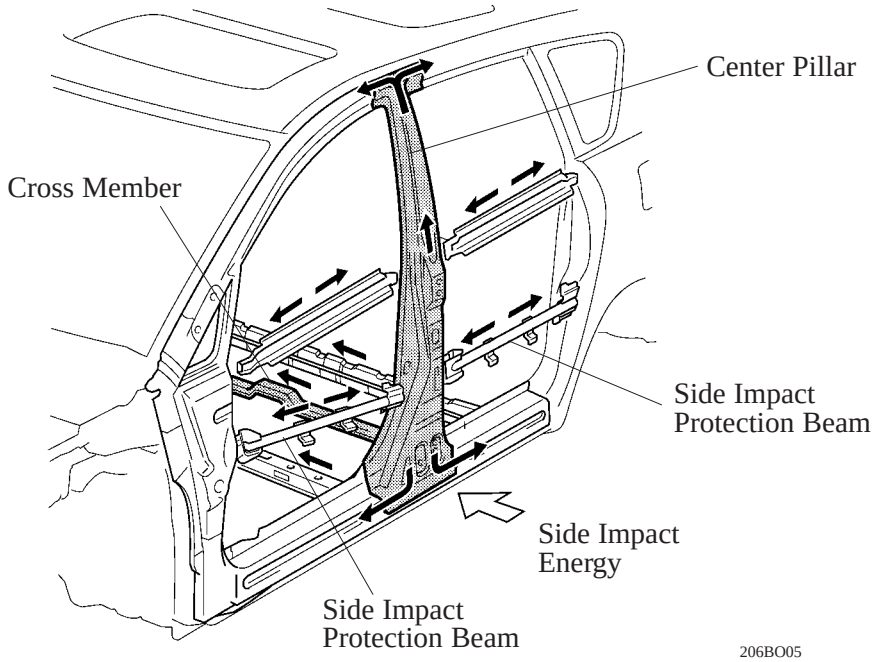

206BO05

- A Head Impact Protection Structure has been adopted. With this type of structure, if the occupant's head hits against the roof side rail and pillar in reaction to a collision, the Energy Absorbing Rib of the roof side rail and pillar collapses to help reduce the impact.

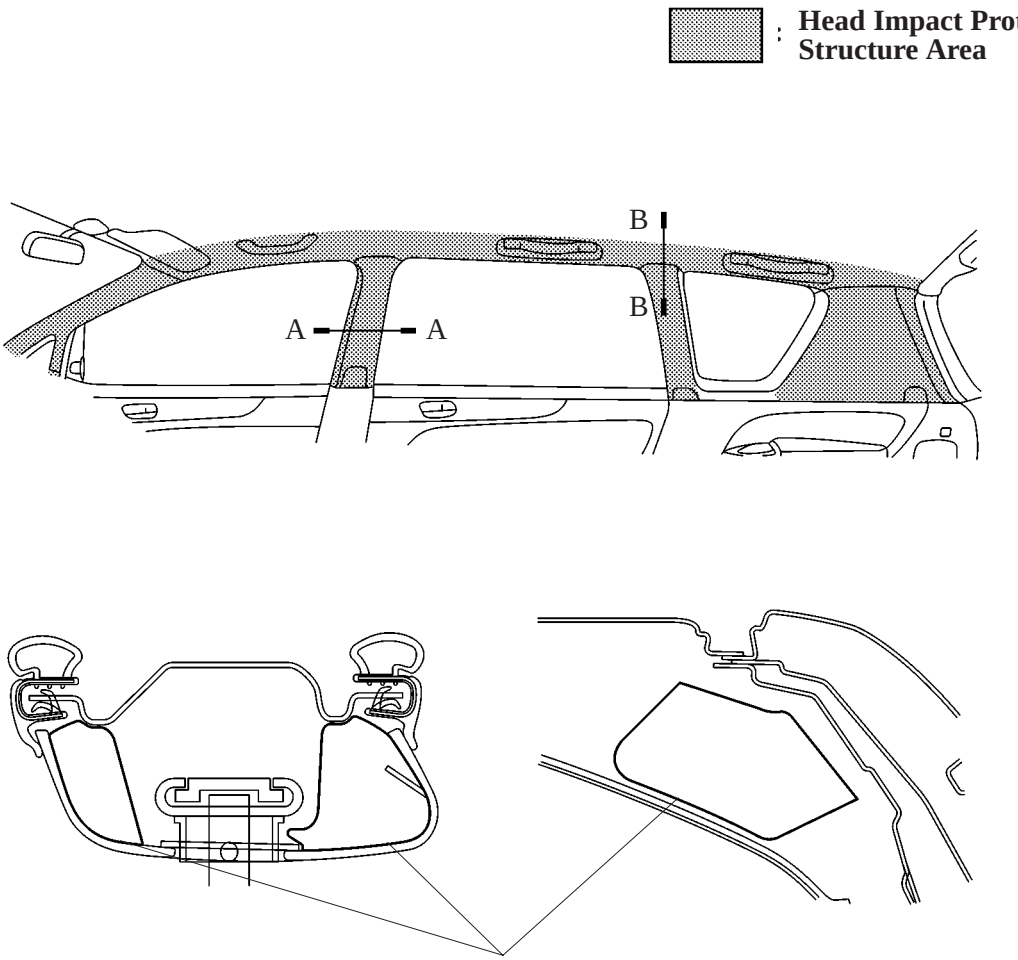

■RUST-RESISTANT BODY

1. General

Rust-resistant performance is enhanced by extensive use of anti-corrosion sheet steel, as well as by an anti-corrosion treatment which includes the application of anti-rust wax, sealer and anti- chipping paint to easily corroded parts such as the hood, doors and rocker panels.

2. Anti-Corrosion Sheet Steel

Anti-corrosion sheet steel is used in all areas other than the roof and interior parts.

: Anti-Corrosion Sheet Steel

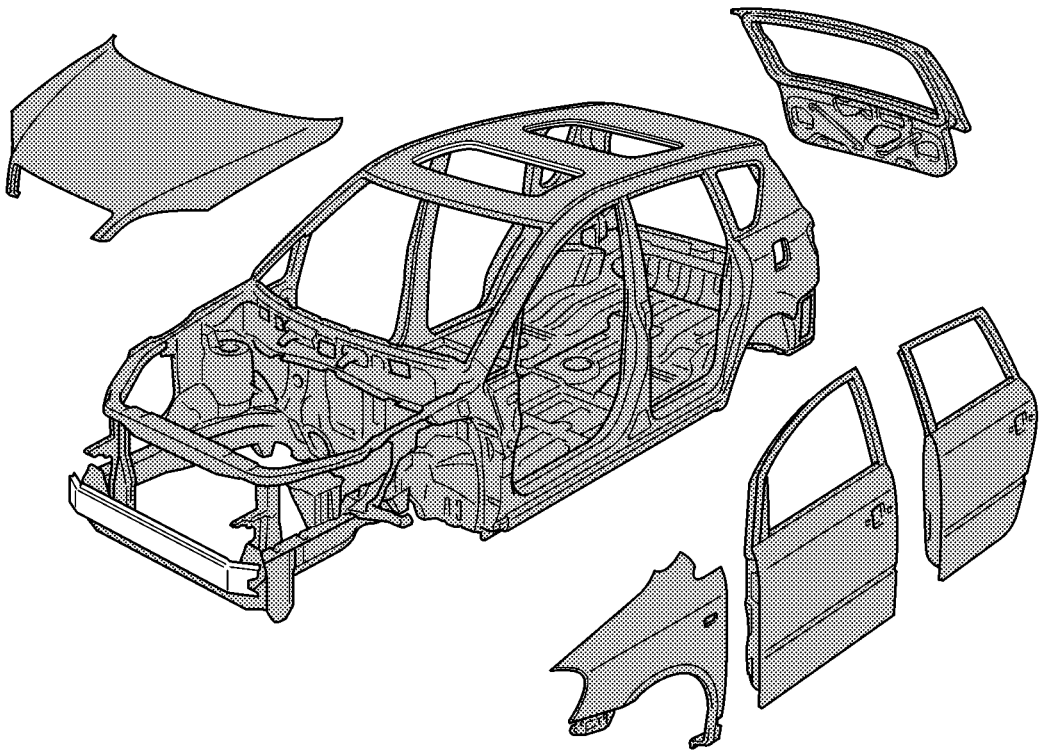

206BO07

3. Wax and Sealer

To improve rust-resisting performance, anti-rust wax is applied to the hemmed portions of the hood and the doors, as well as to the areas where the door hinges are attached. In addition, sealer is applied to the hemmed portions and edges of the panels.

4. Under Coat

PVC (Polyvinyl Chloride) is applied to the underside of the body, inside the rear wheel housings, and other parts that are susceptible to stone chipping damage, thus improving the rust-resisting performance of these areas.

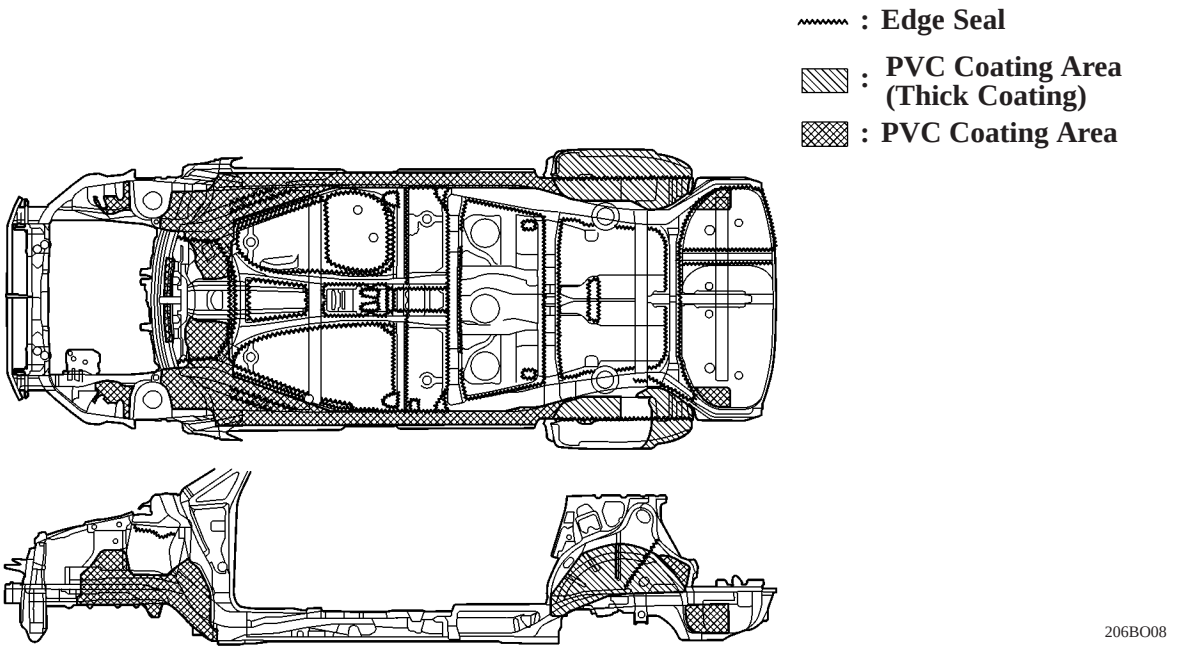

5. Anti-Chipping Application

Anti-chipping paint is applied to the front and rear wheel arches and the rocker panel area to protect them from stone chipping. In addition, soft-chip primer and urethane chipping paint are applied to the front hood area and lower door panel area for European models only.

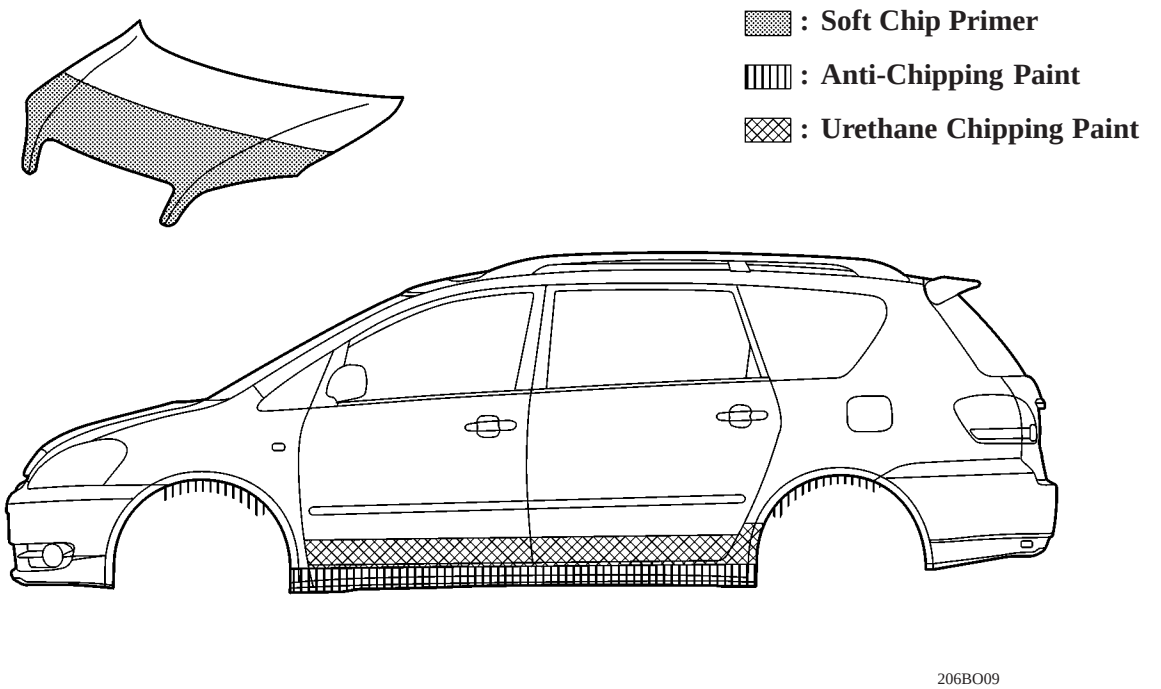

■LOW VIBRATION AND LOW NOISE BODY

1. General

An effective application of vibration damping and noise suppressant materials reduces engine and road noise.

2. Sound Absorbing and Vibration Damping Materials

- Asphalt sheet is used to reduce road noise.
- Formed seal material and urethane molding form are applied onto the roof panel and pillars to reduce wind and road noise.
- Sandwich panels are used in the rear wheel housings to reduce road noise, sand splashing sound, and water splashing sound.
- A dash panel inner silencer with a cover made of high-density sheet that excels in sound insulation and consisting of wave felt have been adopted to reduce engine and road noise.

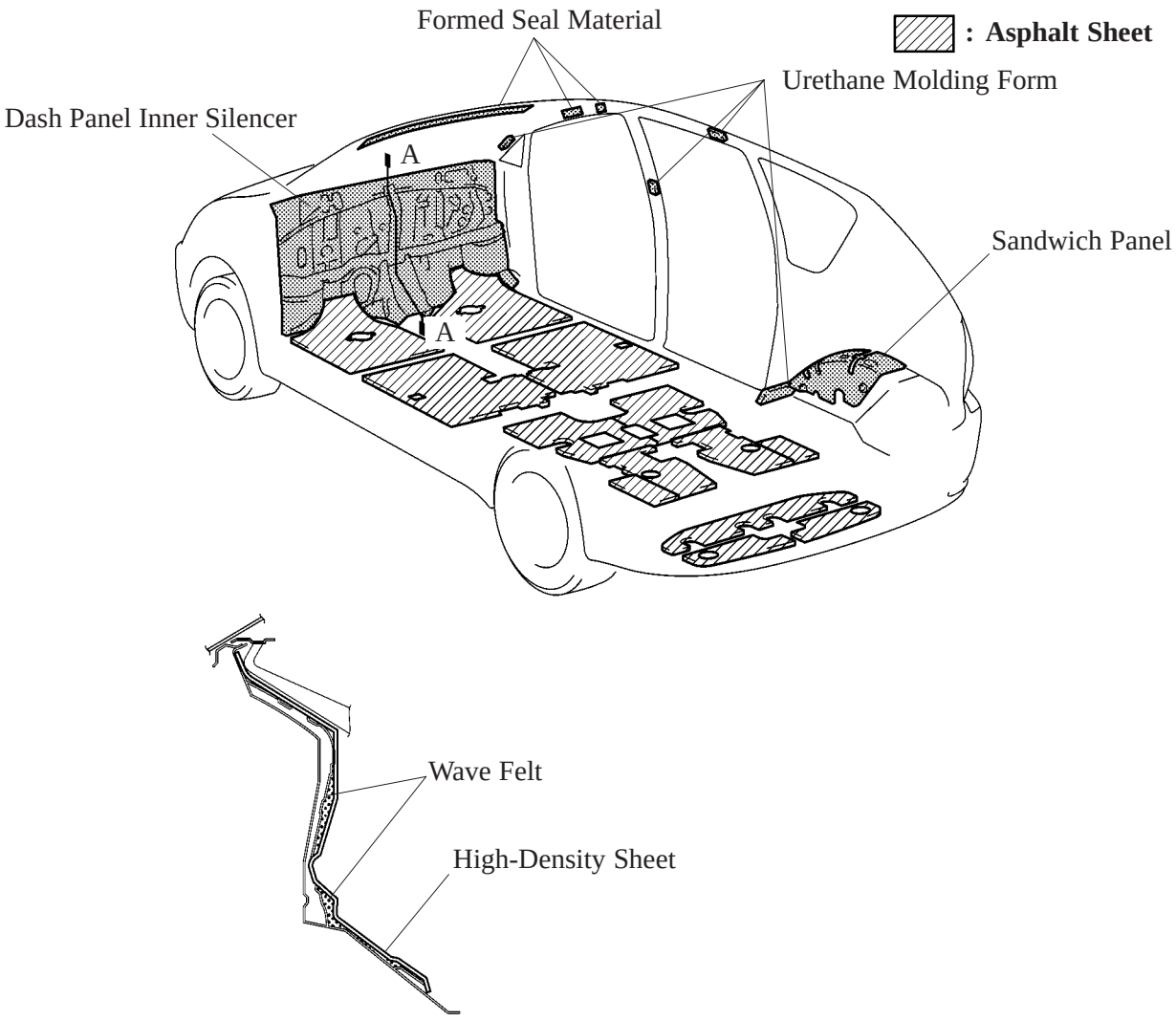

A – A Cross Section

206BO10

- With the establishment of a dash panel cross member and dash panel reinforcement, the vibration of the dash panel section is restrained.

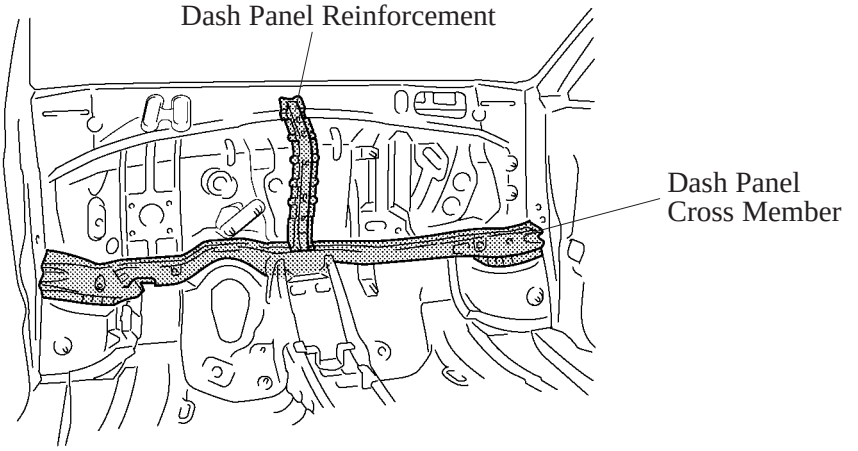

206BO11

3. Weather Strip

- Two layers of inner weather strips are used on the front and rear doors to improve their sound insulation performance.
- A lip has been provided between the rear of the front side glass and the door mirror to reduce wind noise.

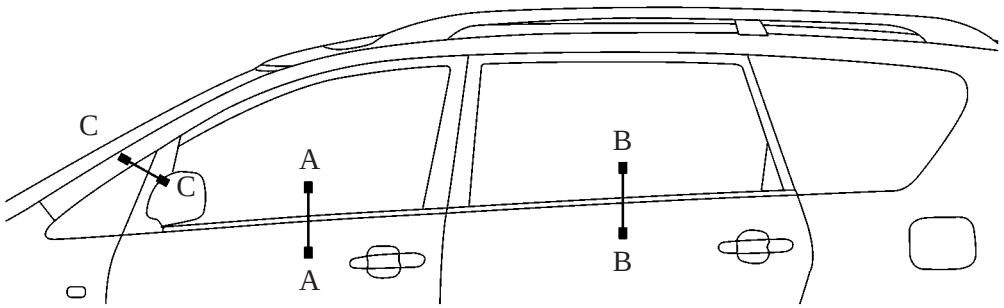

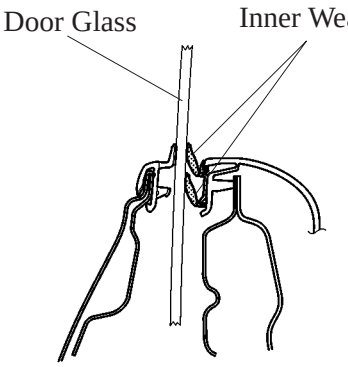

A – A Cross Section

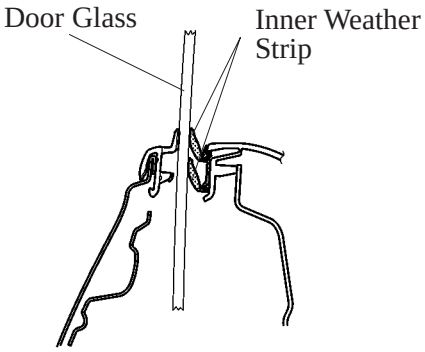

B – B Cross Section

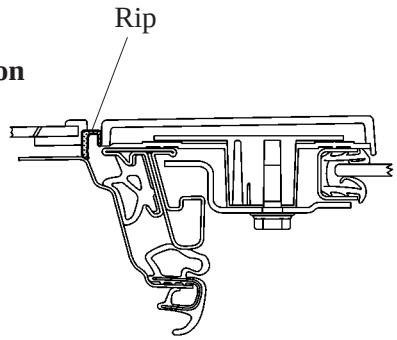

C – C Cross Section

206BO12

ENHANCEMENT OF PRODUCT APPEAL

■No.1 REAR SEAT

- ISO-FIX*1 bar for securing child seats have been provided.
- On Australia models, three CRS (Child Restraint System) tether anchor brackets for securing a child seat have been provided.

*1: A method for securing child seats in compliance with ISO (International Organization for Standardization) standards.



206BO14

Europe Model

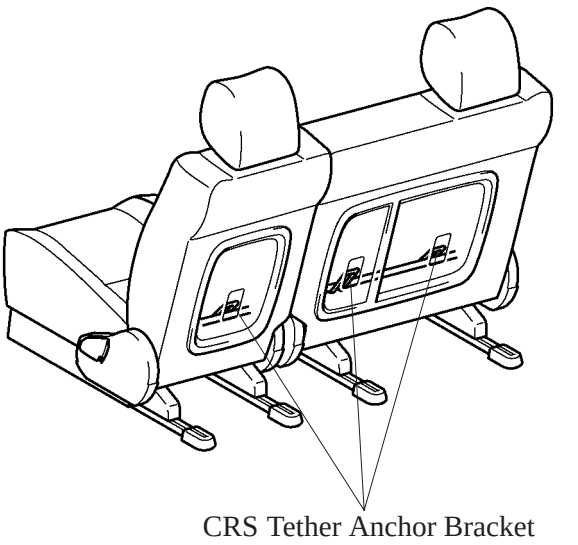

206BO15

Australia Model

■SEAT BELT

1. General

Seat belts are provided with the functions listed below.

Item		Europe Model	Australia and General Countries Models
Front Seats		• 3-Point ELR*1 • Electrical Sensing Type Seat Belt Pretensioner • Seat Belt Force Limiter	←
No.1 Rear Seats	Center	3-Point ELR and ALR*2	←
	Outer	3-Point ELR and ALR	2-Point NR*3
No.2 Rear Seats		3-Point ELR	←

*1: Emergency Locking Retractor

*2: Automatic Locking Retractor

*3: Non Retractor

2. Pretensioner and Force Limiter

- In accordance with the ignition signal from the airbag sensor assembly, the seat belt pretensioner activates simultaneously with the deployment of the SRS airbags for the driver and front passenger. However, collisions occurring at certain speeds and angles may cause the seat belt pretensioners and SRS airbags not to operate all together.
- In the beginning of a collision, the seat belt pretensioner instantly pulls up the seat belt, thus providing the excellent belt's effectiveness in restraining the occupant. When the impact of a collision causes the tension of the seat belt applied to the occupant to reach a predetermined level, the force limiter restrains the tension, thus controlling the force applied to the occupant's chest area.

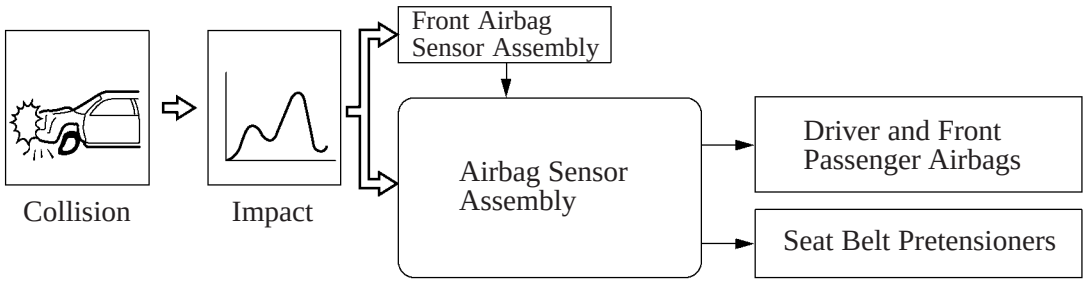

196BO21

■SPARE TIRE CARRIER

Because a storage space has been provided under the floor of the luggage compartment, the spare tire carrier has been located under the left front seat. The spare tire carrier has been designed exclusively for a compact spare tire.

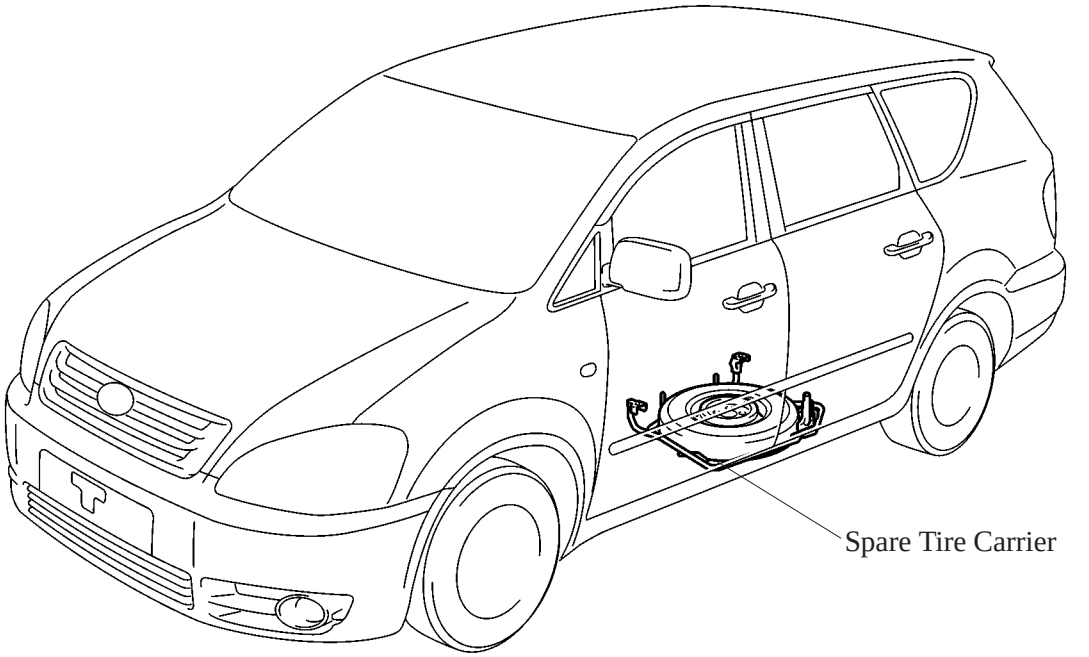

206BO16

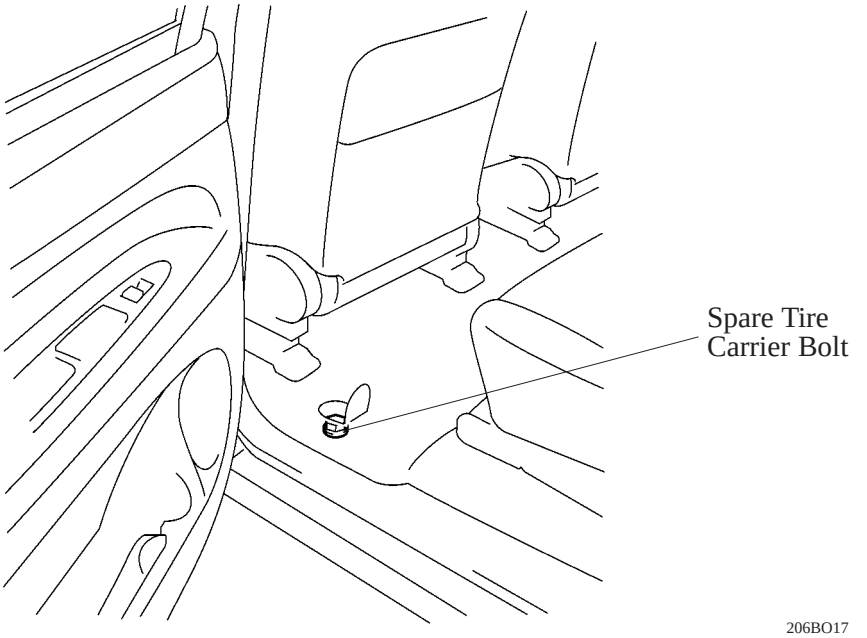

206BO17

Service Tip

This carrier has been designed exclusively for a compact spare tire, and it cannot accommodate a ground tire. After changing the tires, wrap the punctured tire with a wrapping sheet stored in the required tool bag, and store it in the luggage compartment.

CHASSIS

CLUTCH

■DESCRIPTION

- A clevis damper is used on all models and a clutch accumulator is used on 1CD-FTV engine models to reduce the noise and vibration that is transmitted to the clutch pedal.
- The clutch master cylinder and the reservoir tank are provided separately to improve serviceability, and the reservoir tank is also shared by the brake system.

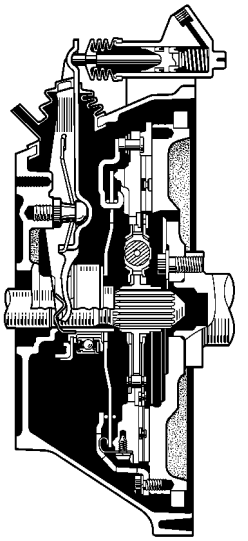

181CH01

1AZ-FE Engine Model

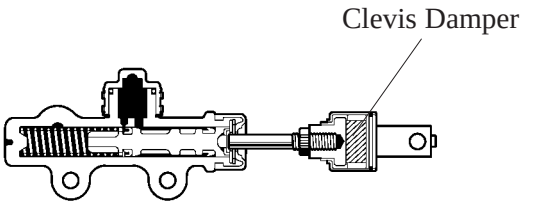

206CH30

LHD Model

▶ Specifications ◀

Item			1AZ-FE	1CD-FTV
Clutch	Type		Dry Type Single-Plate Clutch Diaphragm Spring	←
	Operation		Hydraulic	←
Clutch Cover	Type		DST*1	←
	Size	mm (in.)	236 (9.29)	←
Clutch Disc	Facing Size*2	mm (in.)	236 × 150 × 3.5 (9.29 × 5.91 × 0.14)	←
	Facing Area	cm^2 ($in.^2$)	260 (40.2)	←
Master Cylinder (with Clevis Damper)	Type		Conventional	←
	Cylinder Diameter	mm (in.)	15.87 (0.62)	←
Release Cylinder	Type		Non-Adjustable	←
	Cylinder Diameter	mm (in.)	20.64 (0.81)	←
Clutch Accumulator	Size	mm (in.)	—	42.0 (1.65)
Clutch Pedal	Stroke	mm (in.)	140 ± 5 (5.51 ± 0.20)	145 ± 5 (5.71 ± 0.20)
	Pedal Ratio	RHD	5.4	←
		LHD	5.48	←

*1: DST (Diaphragm Spring Turnover)
*2: Outer Diameter × Inner Diameter × Thickness

■MASTER CYLINDER

- The clutch master cylinder and the reservoir tank are provided separately, and the reservoir tank is also shared by the brake system.
  This reservoir tank has a partition plate that separates the fluid for the brake and clutch systems, only the amount of fluid over a prescribed amount is shared.
- On the RHD model, the clutch master cylinder is installed on the engine compartment side of the dash panel, and on the LHD model, it is installed in the cabin, above the clutch pedal bracket.

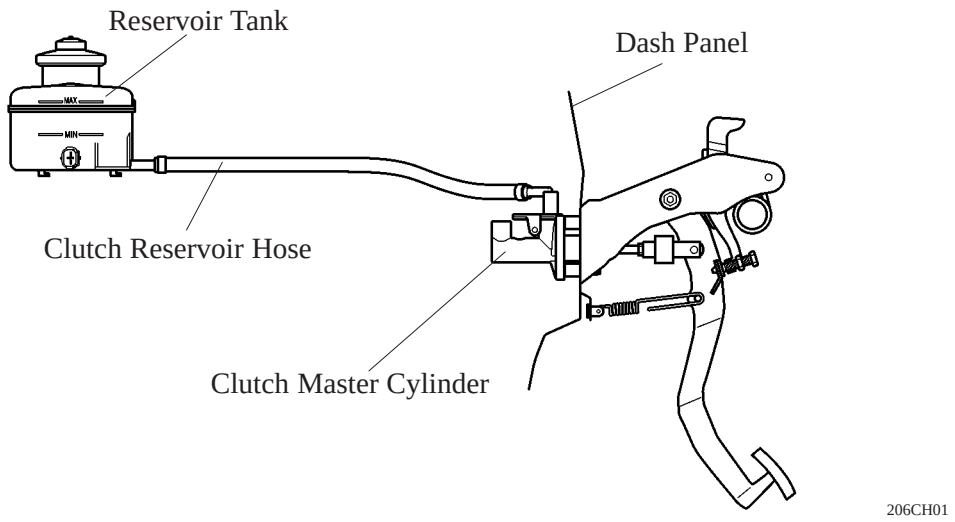

RHD Model

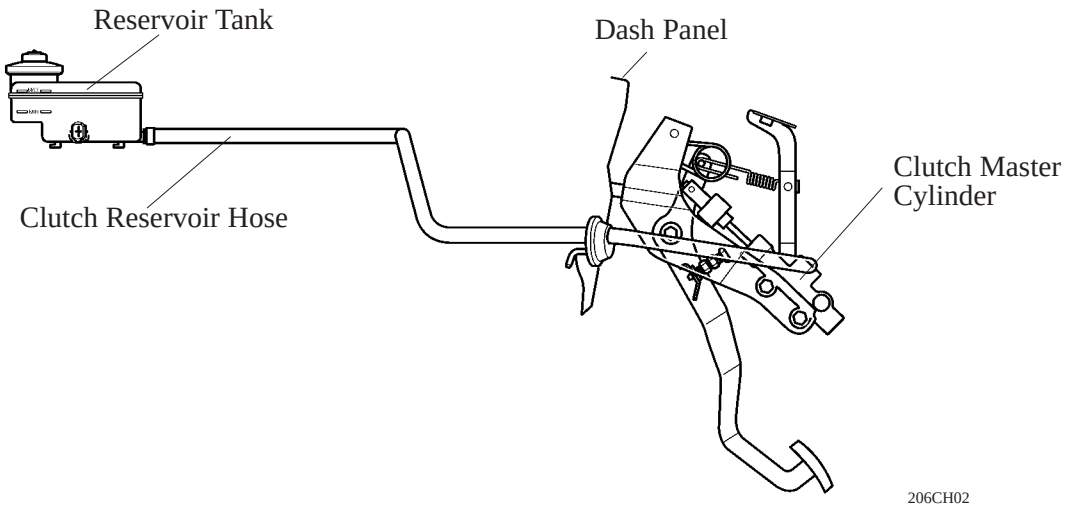

LHD Model

E355 AND E356 MANUAL TRANSAXLE

■DESCRIPTION

- The gear ratio of these transaxles has been optimized in accordance with the output characteristics of the two type engines.
- These transaxles uses a triple-cone type synchromesh mechanism in the 1st gear and 2nd gear, and a double-cone type synchromesh mechanism in the reverse gear.

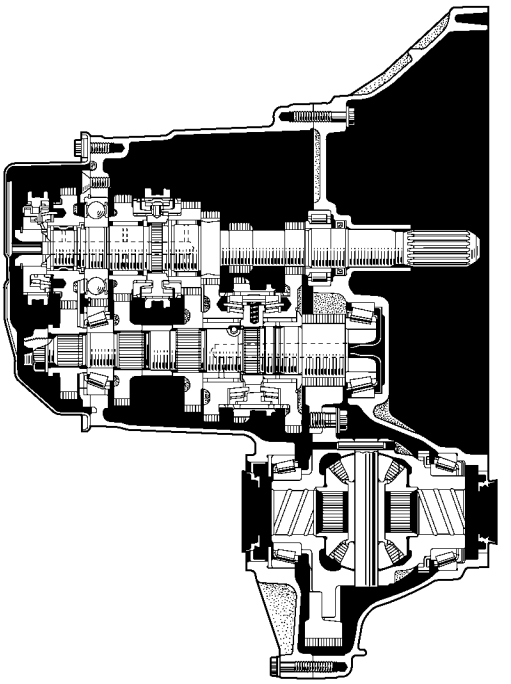

181CH04

▶ Specifications ◀

Item		E355	E356
		1CD-FTV	1AZ-FE
Gear Ratio	1st	3.833	←
	2nd	2.045	←
	3rd	1.333	←
	4th	0.972	1.028
	5th	0.775	←
	Reverse	3.583	←
Differential Gear Ratio		3.684	4.235
Oil Capacity	Liters (US qts, Imp. qts)	2.5 (2.6, 2.2)	←
Oil Viscosity		SAE 75W-90	←
Oil Grade		API GL-3	←
Weight (Dry)	kg	44	←

■TRANSMISSION GEAR

1. General

- A triple-cone type synchromesh mechanism is used in the 1st gear and 2nd gear to increase the synchronizer capacity. This helps to reduce the shifting effort and provide smoother shifting.
- A double-cone type synchromesh mechanism is used in the reverse gear to suppress gear engagement noise.

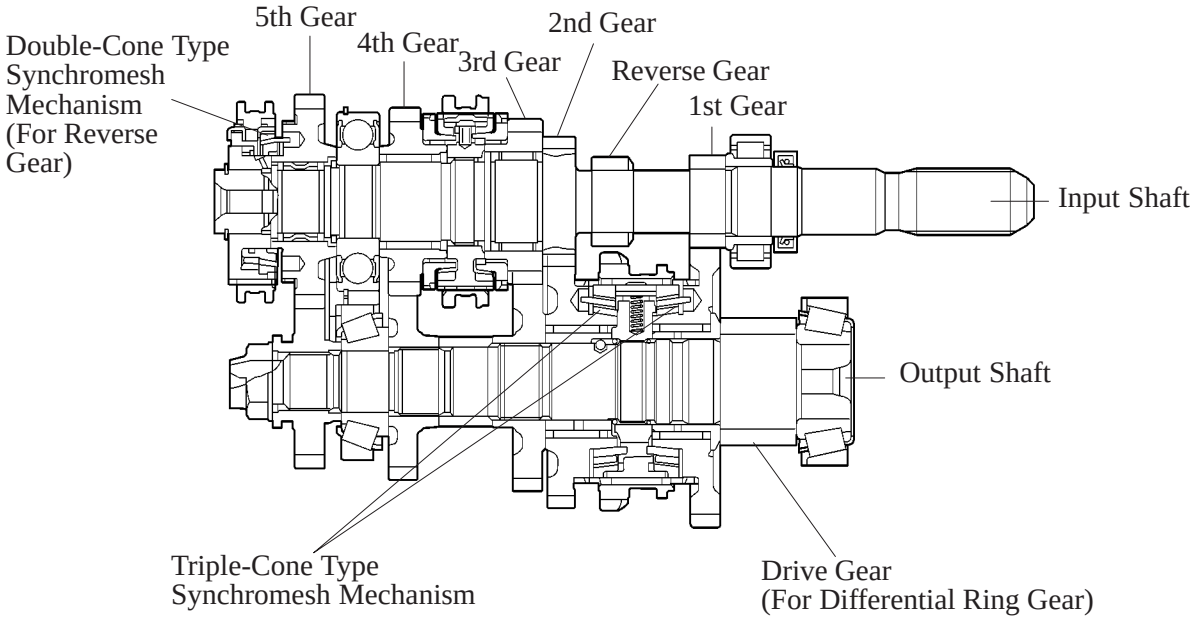

181CH05

2. Construction and Operation

1st and 2nd Gear (Triple-Cone Type Synchromesh Mechanism)

The triple-cone type synchromesh mechanism consists of an outer ring, middle ring, inner ring and gear piece, in addition to a clutch hub, shifting keys and a hub sleeve. The outer ring and inner ring, together with the clutch hub, shifting keys and a hub sleeve, always turn in unison with the transmission output shaft. The middle ring, together with the gear piece, always turns in unison with the transmission gear. During shifting, the shifting keys push against the outer ring via the hub sleeve. As a result, friction is generated between the three cones, comprised of the outer ring and middle ring, the middle ring and inner ring, and the inner ring and gear piece, thus causing a synchronizing action and permitting the gear piece and hub sleeve to engage smoothly.

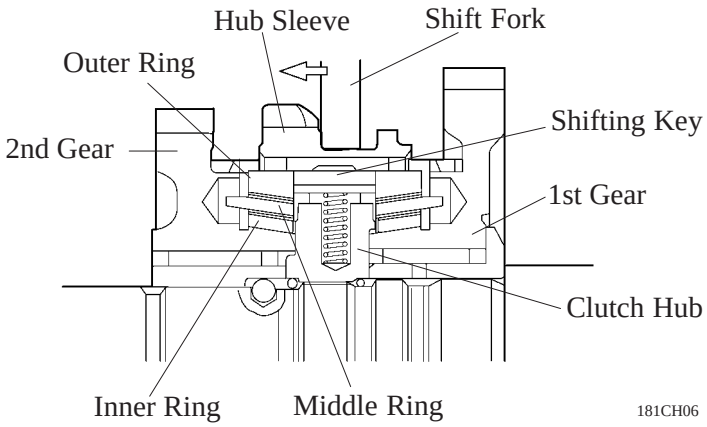

181CH06

CH

Reverse Gear (Double-Cone Type Synchromesh Mechanism)

When shifted to the reverse position, the hub sleeve is pushed to the left side (see illustration) thereby pushing the pull ring to the left also. The pull ring pulls the inner ring to the left thereby synchronizing the inner ring, middle ring and outer ring. The synchronizing action stops rotation of the input shaft of the transmission for smoothly engagement of the reverse idle gear.
However, when the 5th synchronizer is activated, synchronization is achieved only by the middle and outer rings.

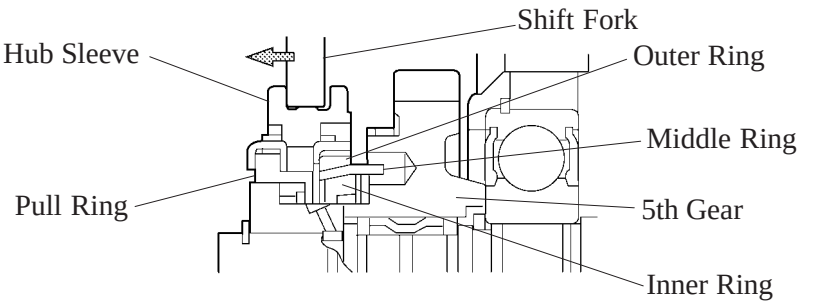

181CH07

■SHIFT AND SELECT MECHANISM

The shift feel has been improved through the adoption of the mass damper (Only 1AZ-FE Engine Model) on the shift and select shaft, and a rolling type lock ball assembly.

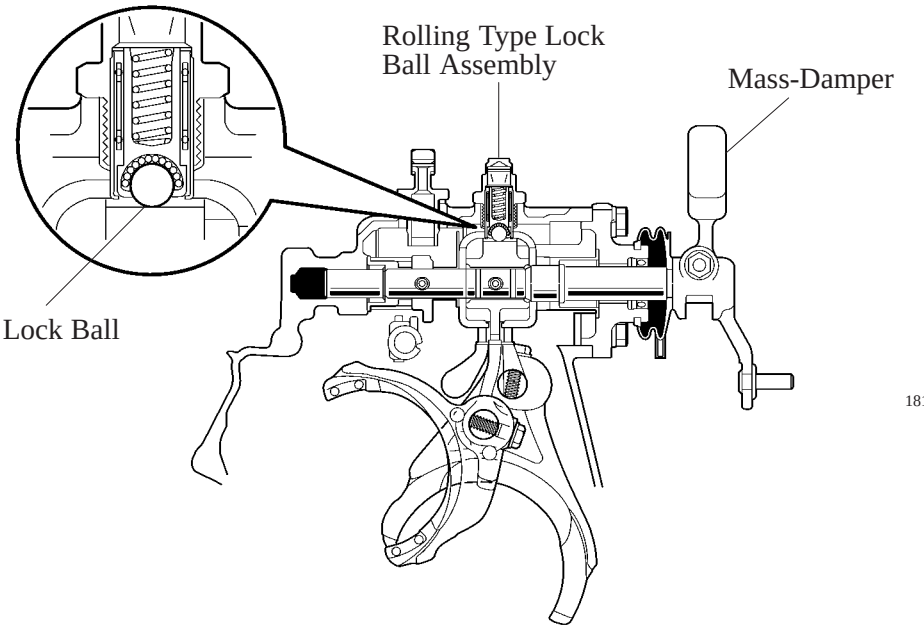

181CH08

1AZ-FE Engine Model

Reverse Gear (Double-Cone Type Synchromesh Mechanism)

When shifted to the reverse position, the hub sleeve is pushed to the left side (see illustration) thereby pushing the pull ring to the left also. The pull ring pulls the inner ring to the left thereby synchronizing the inner ring, middle ring and outer ring. The synchronizing action stops rotation of the input shaft of the transmission for smoothly engagement of the reverse idle gear.
However, when the 5th synchronizer is activated, synchronization is achieved only by the middle and outer rings.

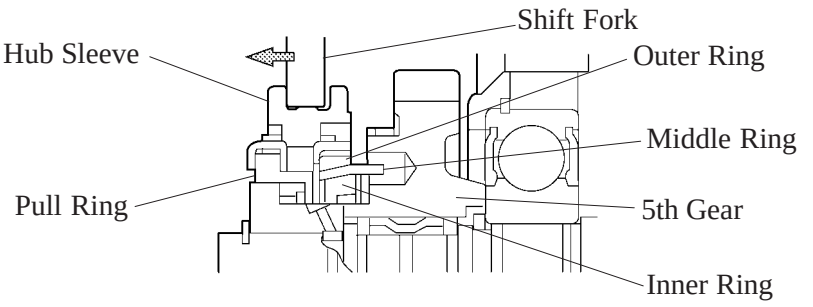

181CH07

■SHIFT AND SELECT MECHANISM

The shift feel has been improved through the adoption of the mass damper (Only 1AZ-FE Engine Model) on the shift and select shaft, and a rolling type lock ball assembly.

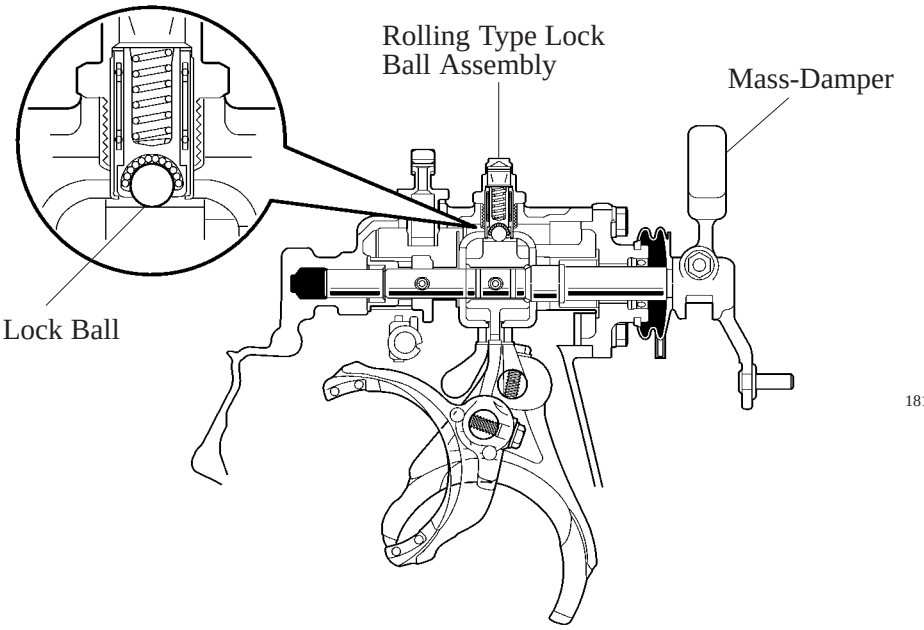

181CH08

1AZ-FE Engine Model

U241E AUTOMATIC TRANSAXLE

■DESCRIPTION

- The compact and high-capacity 4-speed U241E automatic transaxle [Super ECT (Electronically Controlled Transaxle)] has been adopted.
- The ATF warmer has been newly adopted to improve fuel economy.
- The shift lock mechanism has been adopted on the models for Europe.
- The overdrive switch has been changed to the momentary type switch.
- The kick down switch has been adopted on the LHD models for Europe.

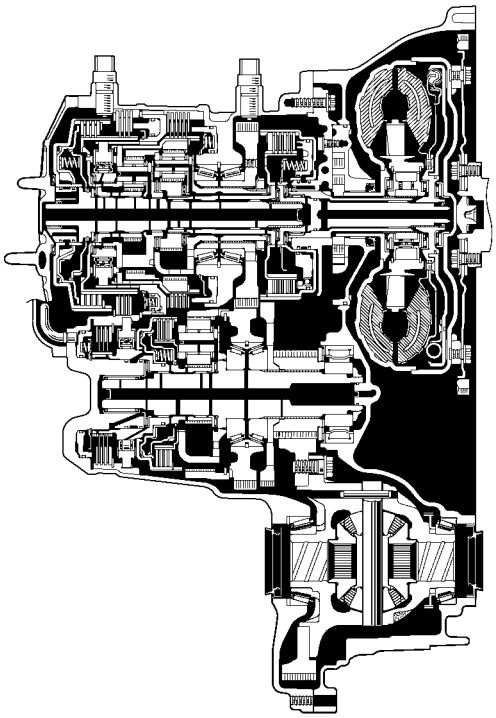

181CH09

▶ Specifications ◀

Item		U241E
Gear Ratio*	1st	3.943
	2nd	2.197
	3rd	1.413
	4th	1.020
	Reverse	3.145
Differential Gear Ratio		3.120
Fluid Capacity	Liters (US qts, Imp. qts)	8.6 (9.1, 7.6)
Fluid Type		ATF Type T-IV
Weight (Dry)	kg	82

* : Counter Gear Ratio Included

■PLANETARY GEAR UNIT

1. General

The U241E automatic transaxle has adopted a new gear layout. In the new gear layout, the counter drive and driven gears are placed in front of the front planetary gear and the under drive (U/D) planetary gear unit is placed above the counter shaft. Furthermore, the force transmission method has been changed by eliminating the brake and the one-way clutch. As a result, a torque capacity that accommodates the high output engine has been attained, while realizing a compact gear unit.

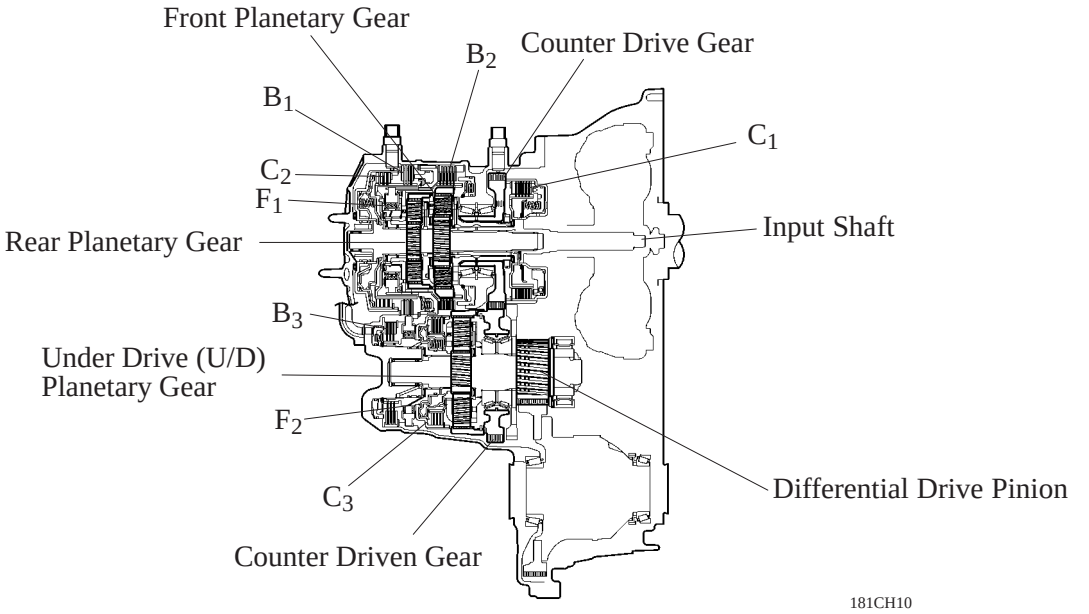

▶ Specifications ◀

Torque Converter			Stall Torque Ratio	1.8
Planetary Gear Unit	C_1	Forward Clutch	The No. of Discs	4
	C_2	Direct Clutch		3
	C_3	U/D Direct Clutch		3
	B_1	2nd Brake		3
	B_2	1st & Reverse Brake		5
	B_3	U/D Brake		3
	F_1	No. 1 One-Way Clutch	The No. of Sprags	22
	F_2	U/D One-Way Clutch		15
	Front Planetary Gear		The No. of Sun Gear Teeth	43
			The No. of Pinion Gear Teeth	17
			The No. of Ring Gear Teeth	77
	Rear Planetary Gear		The No. of Sun Gear Teeth	31
			The No. of Pinion Gear Teeth	19
			The No. of Ring Gear Teeth	69
	U/D Planetary Gear		The No. of Sun Gear Teeth	32
			The No. of Pinion Gear Teeth	26
			The No. of Ring Gear Teeth	83
	Counter Gear		The No. of Drive Gear Teeth	50
			The No. of Driven Gear Teeth	51

2. Motive Power Transaxle

▶ Operating Conditions ◀

Shift Lever Position	Gear	Solenoid Valve SL1	Solenoid Valve SL2	Solenoid Valve S4	Solenoid Valve DSL	C_1	C_2	C_3	B_1	B_2	B_3	F_1	F_2
P	Park	ON	ON	OFF	OFF						○		
R	Reverse	ON	OFF	OFF	OFF		○			○	○		
N	Neutral	ON	ON	OFF	OFF						○		
D	1st	ON	ON	OFF	OFF	○					○	○	○
	2nd	OFF	ON	OFF	OFF	○			○		○		○
	3rd	OFF/ON*	OFF	OFF	OFF/ON*	○	○				○		○
	4th	OFF/ON*	OFF	ON	OFF/ON*	○	○	○					
2	1st	ON	ON	OFF	OFF	○					○	○	○
	2nd	OFF	ON	OFF	OFF	○			○		○		○
L	1st	ON	ON	OFF	ON	○				○	○	○	○

*: Lock-up ON

1) 1st Gear (D or 2 Position)

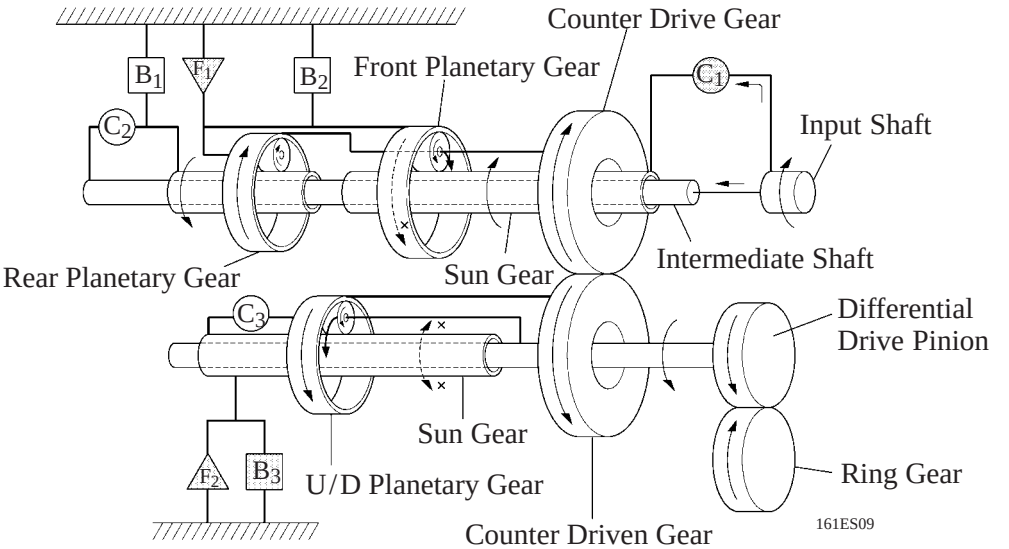

2) 2nd Gear (D or 2 Position)

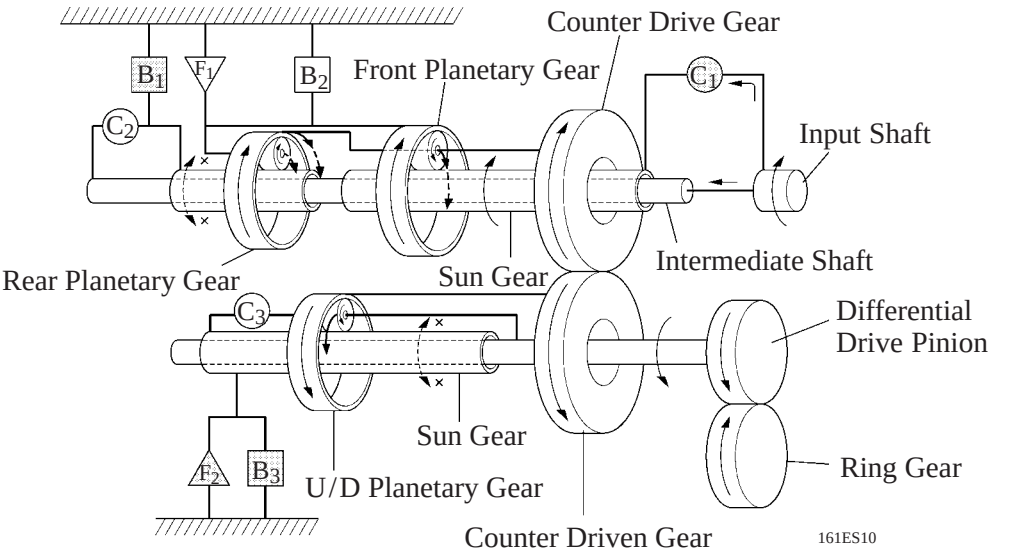

3) 3rd Gear (D Position)

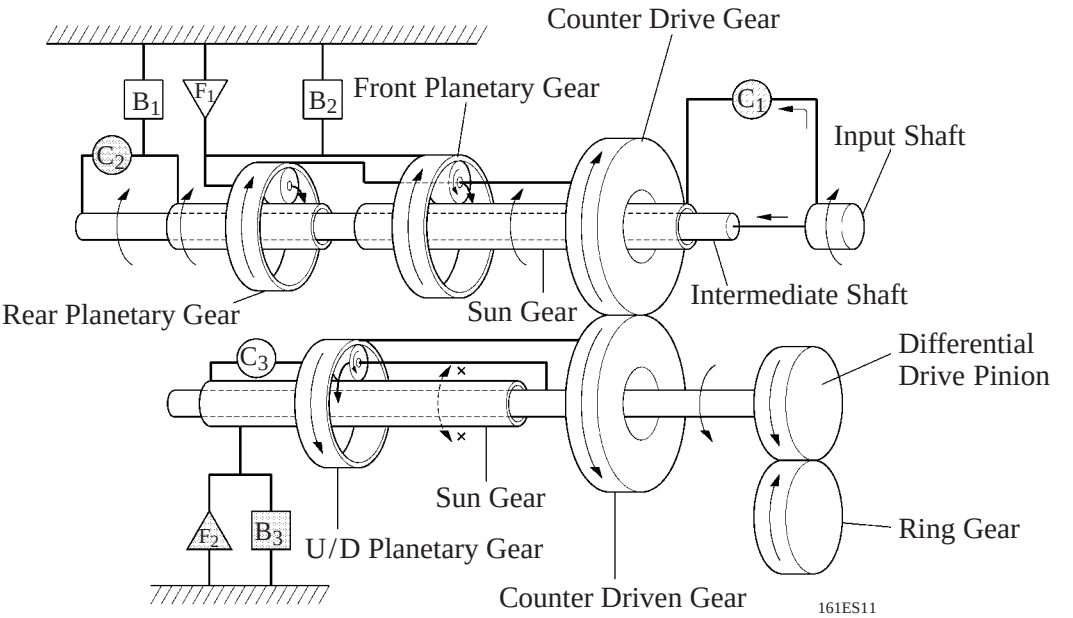

4) 4th Gear (D Position)

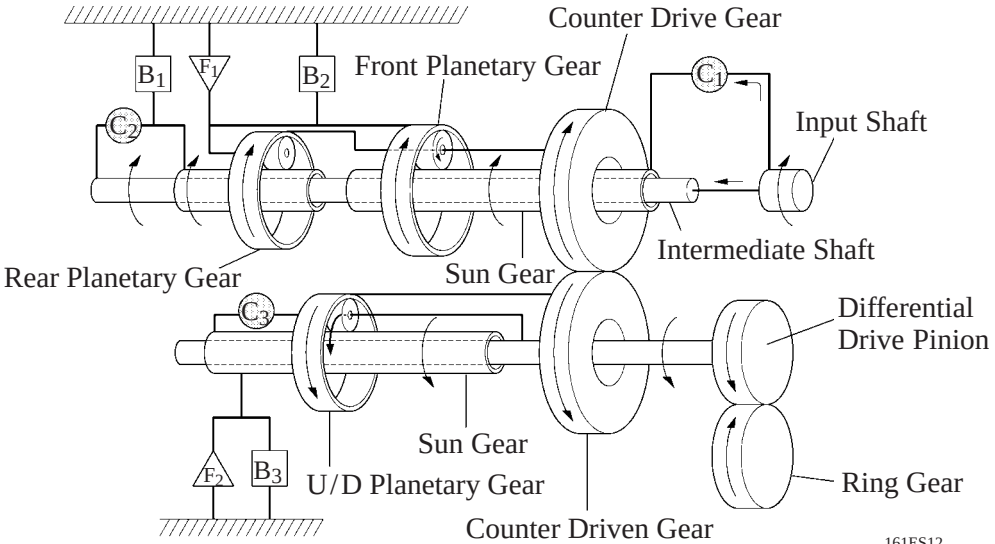

5) 1st Gear (L Position)

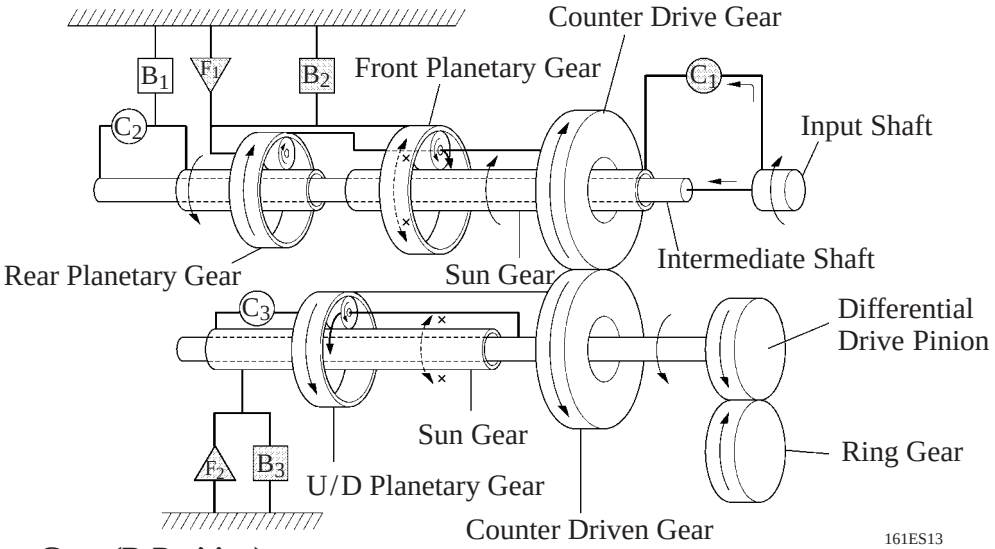

6) Reverse Gear (R Position)

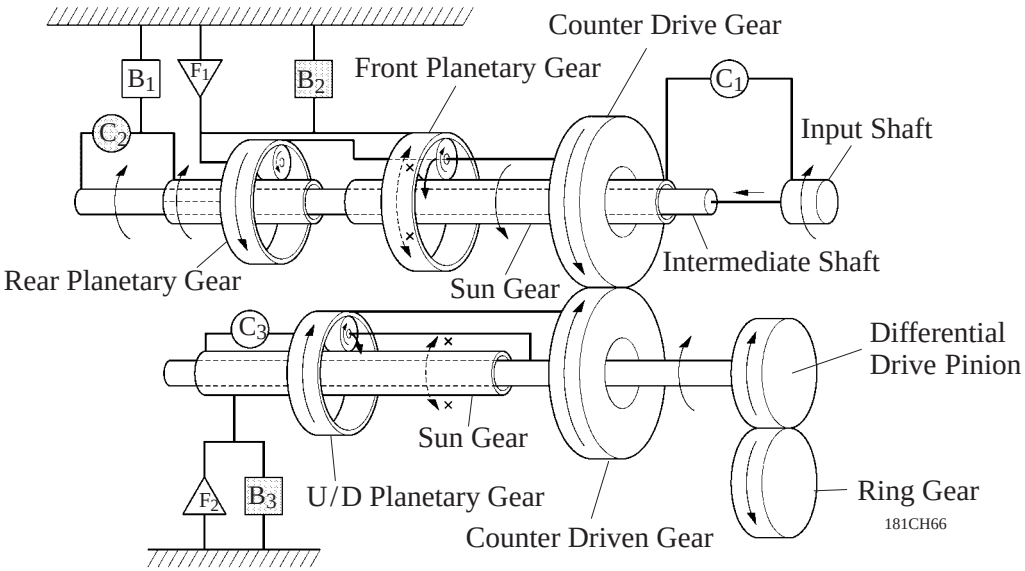

CH

■HYDRAULIC CONTROL SYSTEM

1. General

The hydraulic control system is composed of the oil pump, the valve body, the solenoid valves, the accumulators, the clutches and brakes as well as the fluid passages which connected all of these components. Based on the hydraulic pressure acting on the torque converter clutch, clutches and brakes in accordance with the vehicle driving conditions.

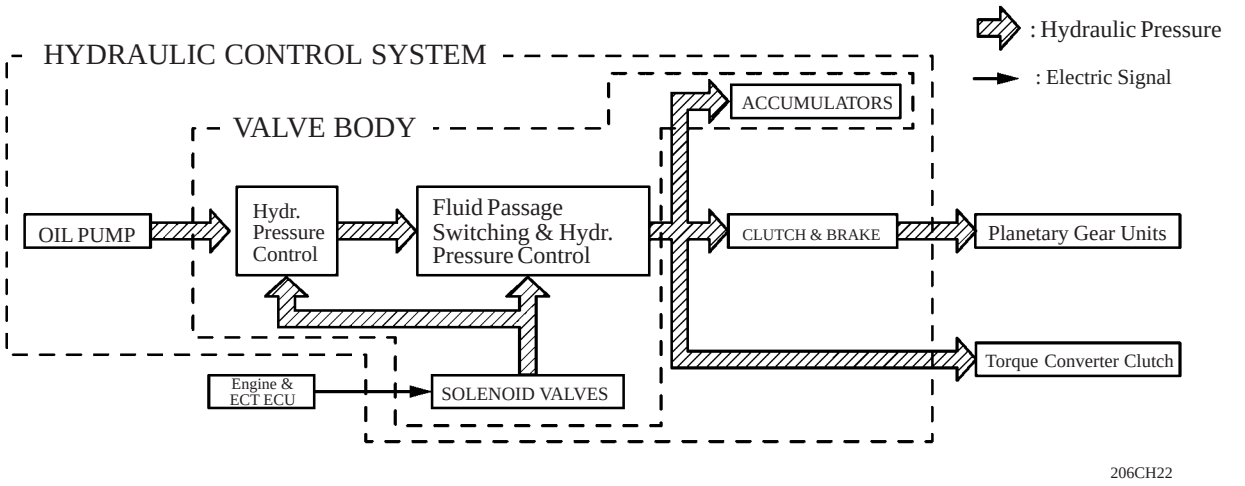

2. Valve Body

The valve body has a two-stage construction. Also, a compact, lightweight, and highly rigid valve body has been realized. All the solenoid valves are installed in the lower valve body.

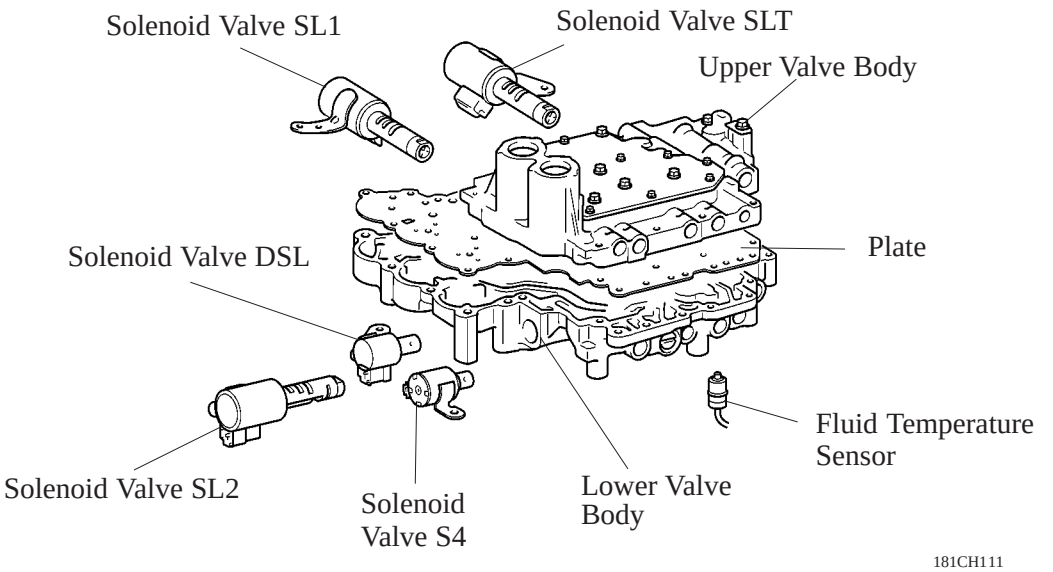

■ELECTRONIC CONTROL SYSTEM

1. Construction

The configuration of the electronic control system in the U214E automatic transaxle is as shown in the following chart.



*: Only for the European LHD Models.

CH

2. Layout of Components

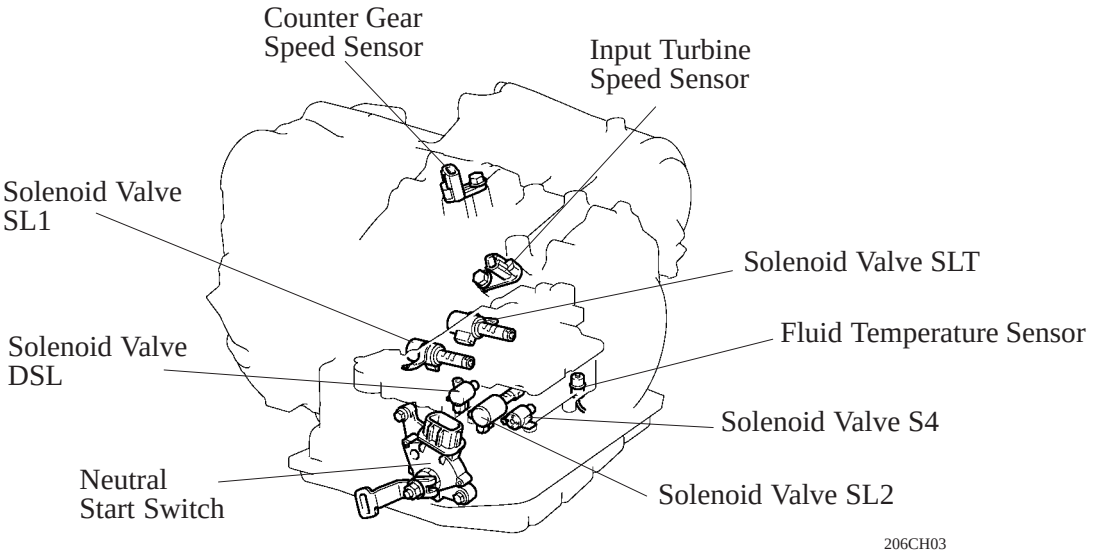

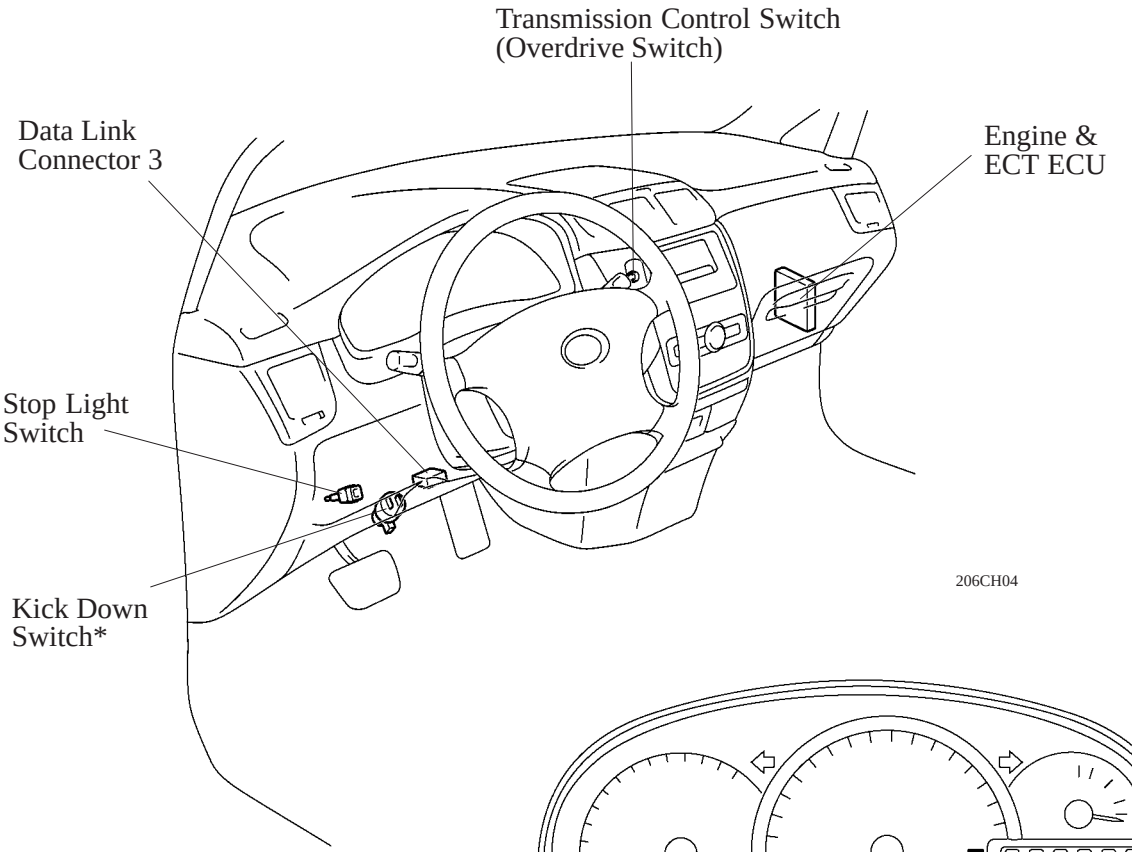

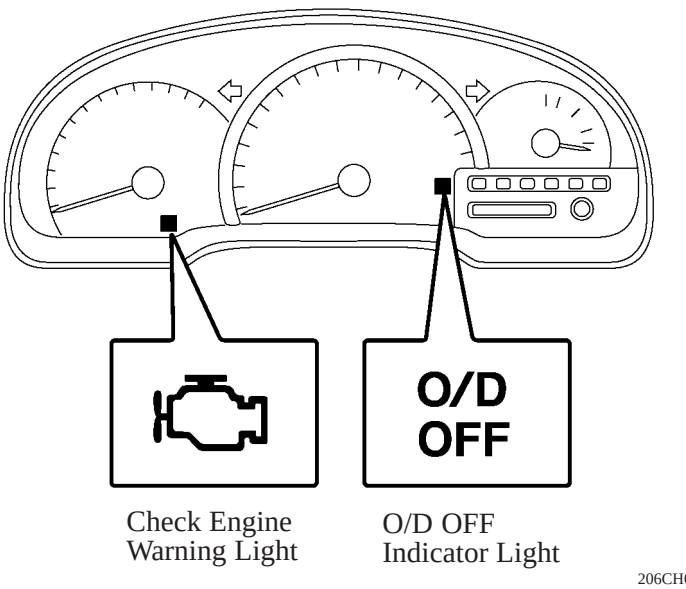

*: Only for the European LHD Models

3. Solenoid Valve

Solenoid Valve SL1, SL2, and SLT

In order to provide a hydraulic pressure that is proportion to current that flows to the solenoid coil, the solenoid valve SL1, SL2 and SLT linearly controls the line pressure and clutch and brake engagement pressure based on the signals it receives from the engine & ECT ECU.

Solenoid Valve	Function
SL1	• B_1 brake pressure control • Lock-up clutch pressure control
SL2	C_2 clutch pressure control
SLT	• Line pressure control • Secondary pressure control

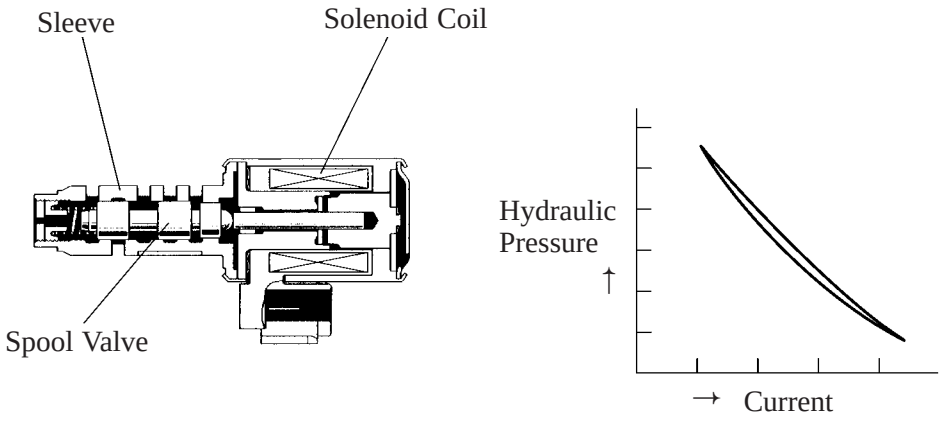

161ES22

Solenoid Valve S4 and DSL

Solenoid Valve	Type	Function
S4	3-way	Switches the 3 – 4 shift valve.
DSL	3-way	• Controls the B_2 control valve via the C_2 lock valve. • Controls the lock-up relay via the C_2 lock valve.

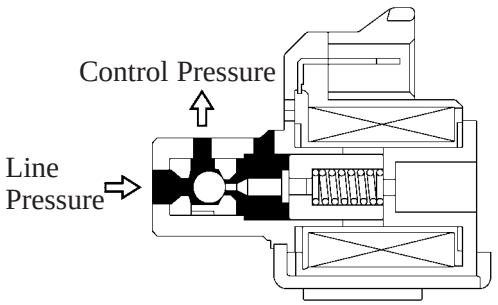

Solenoid Valve ON

161ES65

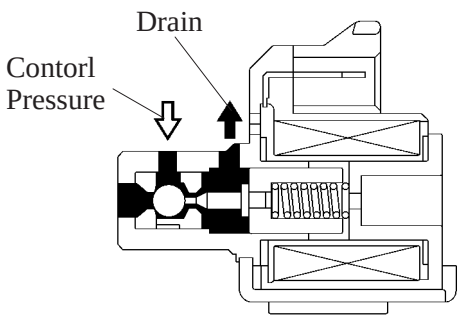

Solenoid Valve OFF

181CH12

4. Fluid Temperature Sensor

A fluid temperature sensor is installed inside the valve body for direct detection of the fluid temperature. Fluid temperature sensor is used for revision of clutches and brakes pressure to keep smooth shift quality every time.

5. Speed Sensors

The U241E automatic transaxle has adopted an input turbine speed sensor (for the NT signal) and a counter gear speed sensor (for the NC signal). Thus, the engine & ECT ECU can detect the timing of the shifting of the gears and appropriately control the engine torque and hydraulic pressure in response to the various conditions.

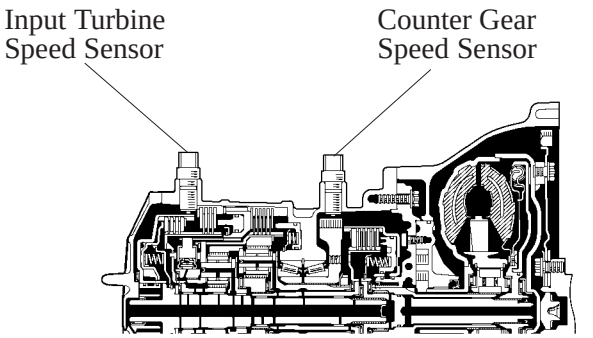

181CH14

■AUTOMATIC TRANSAXLE CONTROL SYSTEM

1. General

The automatic transaxle control system of the U241E automatic transaxle consists of the controls listed below.

System	Function
Clutch Pressure Control (See Page CH-18)	• Controls the pressure that is applied directly to B_1 brake and C_2 clutch by actuating the shift solenoid valve in accordance with the engine & ECT ECU. • The solenoid valves SL1 and SL2 minutely controls the clutch pressure in accordance with the engine output and driving conditions.
Apply Orifice Control (See Page CH-19)	The apply orifice control valve varies the apply orifice to control the flow volume supplied to the B_3 brake.
Centrifugal Fluid Pressure Cancelling Mechanism (See Page CH-20)	Applies an equal pressure from the opposite side to cancel the influence of the pressure that is created by centrifugal force.
Line Pressure Optimal Control (See Page CH-21)	Actuates the solenoid valve SLT to control the line pressure in accordance with information from the engine & ECT ECU and the operating conditions of the transaxle.
Engine Torque Control	Retards the engine ignition timing temporarily to improve shift feeling during up or down shifting.
Shift Timing Control	The engine & ECT ECU sends current to the solenoid valve SL1 and/or SL2 based on signals from each sensor and shifts the gear.
Lock-Up Timing Control	The engine & ECT ECU sends current to the shift solenoid valve based on signals from each sensor and engages or disengages the lock-up clutch.
“N” to “D” Squat Control	When the shift lever is shifted from “N” to “D” range, the gear is temporarily shifted to 3rd and then to 1st to reduce vehicle squat.
Fail-Safe (See Page CH-23)	Even if a malfunction is detected in the sensors or solenoids, the engine & ECT ECU effects fail-safe control to prevent the vehicle’s drivability from being affected significantly.
Diagnosis (See Page CH-24)	When the engine & ECT ECU detects a malfunction, the engine & ECT ECU diagnoses and memorize the failed section.

2. Clutch Pressure Control

Clutch to Clutch Pressure Control

A direct clutch pressure control has been adopted for shifting from the 1st to 2nd gear, and from the 2nd to 3rd gear. Actuates solenoid valves SL1 and SL2 in accordance with the signals from the engine & ECT ECU, and guides this output pressure directly to control valves B_1 and C_2 in order to regulate the line pressure that acts on the B_1 brake and C_2 clutch. As a result, compact B_1 and C_2 accumulators without a back pressure chamber have been realized.

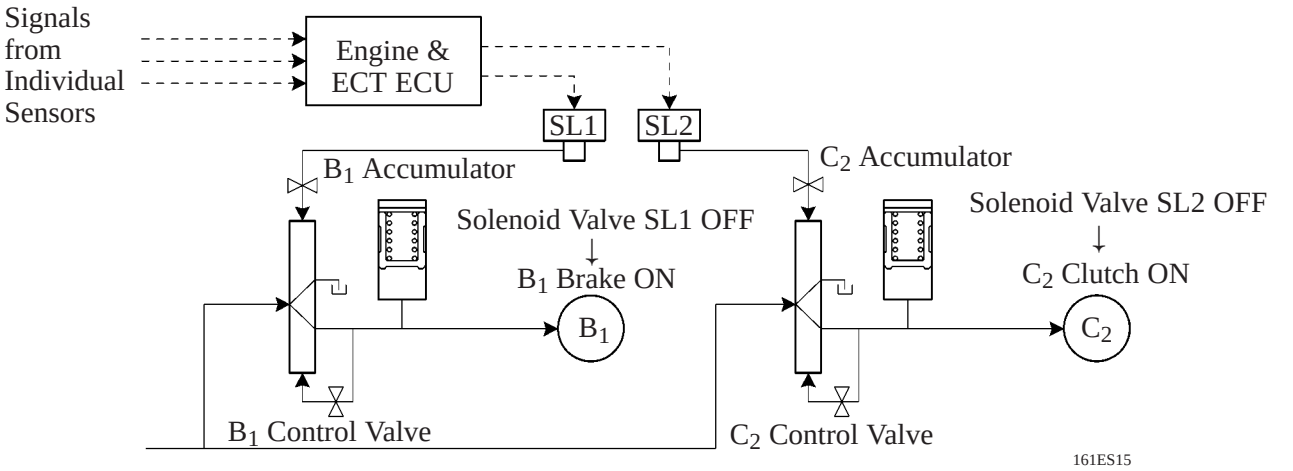

Clutch Pressure Optimal Control

Solenoid valves SL1 and SL2 are used for optimal control of clutch pressure. The engine & ECT ECU monitors the signals from various types of sensors such as the input turbine speed sensor, allowing shift solenoid valves SL1 and SL2 to minutely control the clutch pressure in accordance with engine output and driving conditions. As a result, smooth shift characteristics have been realized.

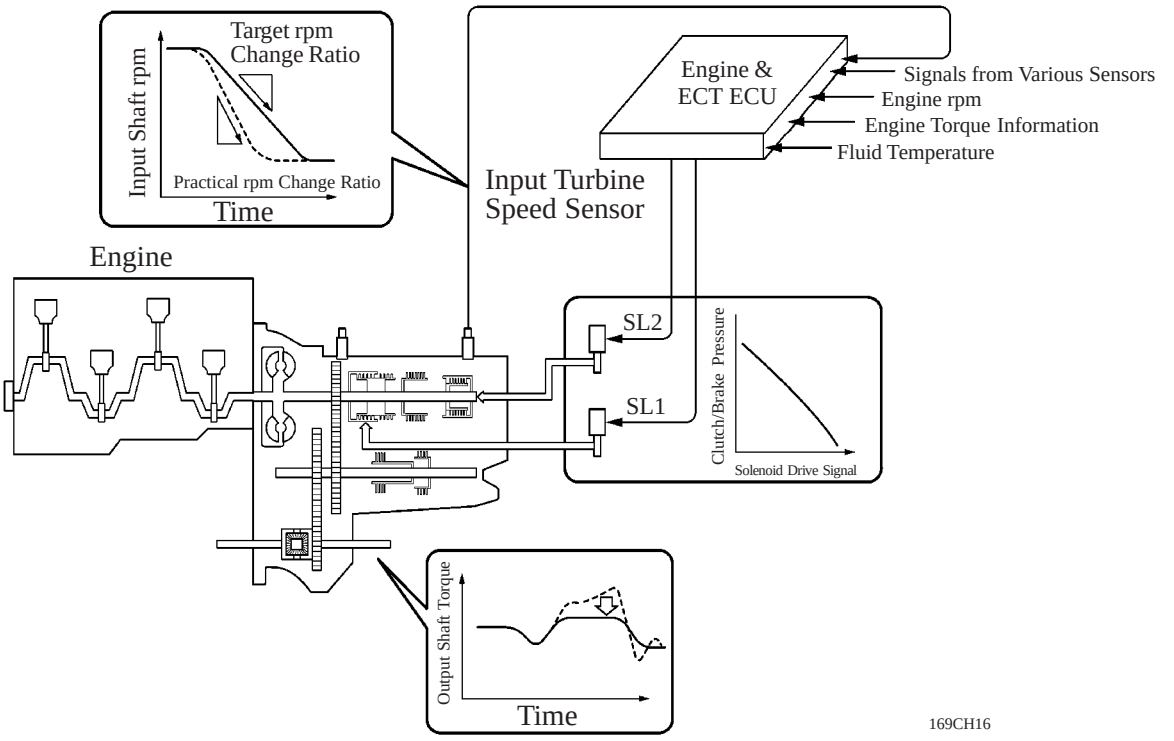

3. Apply Orifice Control

The B_3 orifice control valve has been provided for the B_3 brake, which is applied when shifting from 4th to 3rd. The B_3 orifice control valve is controlled by the amount of the line pressure in accordance with shifting conditions, and the flow volume of the fluid that is supplied to the B_3 brake is controlled by varying the size of the control valve's apply orifice.

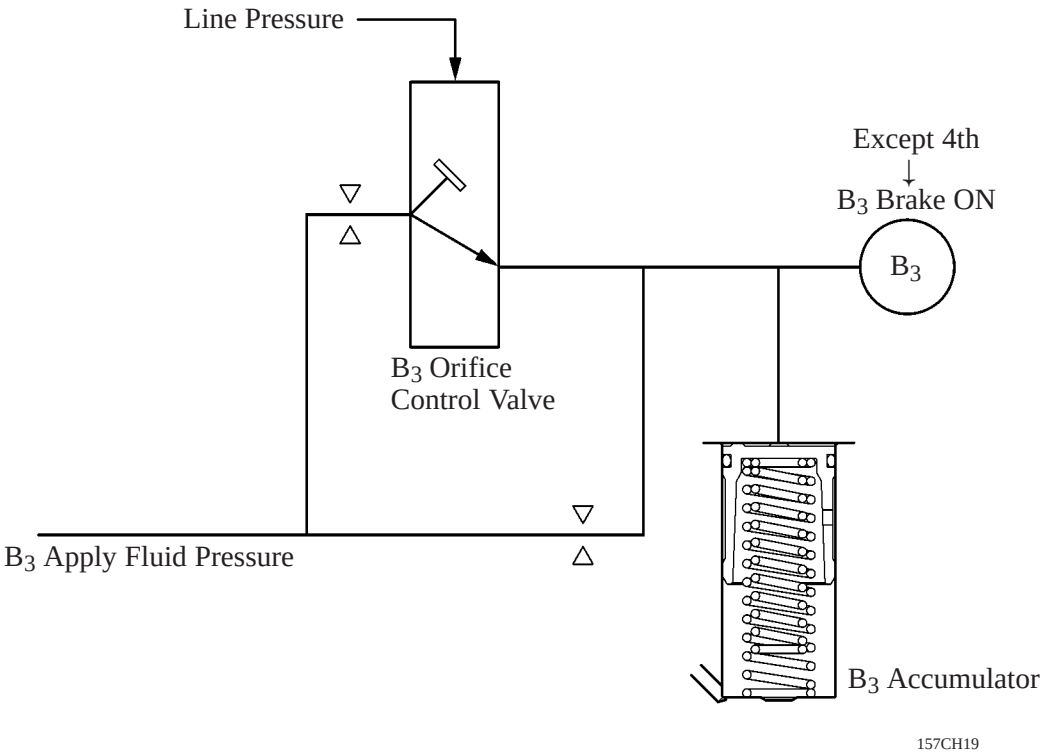

4. Centrifugal Fluid Pressure Canceling Mechanism

A centrifugal fluid pressure canceling mechanism has been adopted in the C_1 , C_2 and C_3 clutches that are applied when shifting from 2nd to 3rd and from 3rd to 4th. In the conventional clutch mechanism, to prevent the generation of pressure by the centrifugal force that is applied to the fluid in the piston fluid pressure chamber when the clutch is released, a check ball is provided to discharge the fluid. Therefore, before the clutch can be subsequently applied, it took time for the fluid to fill the piston fluid pressure chamber. During shifting, in addition to the pressure that is controlled by the valve body, the pressure that acts on the fluid in the piston fluid pressure chamber also exerts influence, which is dependent upon rpm fluctuations. In order to eliminate this influence, a canceling fluid pressure chamber is provided opposite to the piston fluid pressure chamber. By utilizing the lubrication fluid such as that of the shaft, the same amount of centrifugal force is applied, thus canceling the centrifugal force that is applied to the piston itself. Accordingly, it is not necessary to discharge the fluid through the use of a check ball, and a highly responsive and smooth shifting characteristic has been achieved.

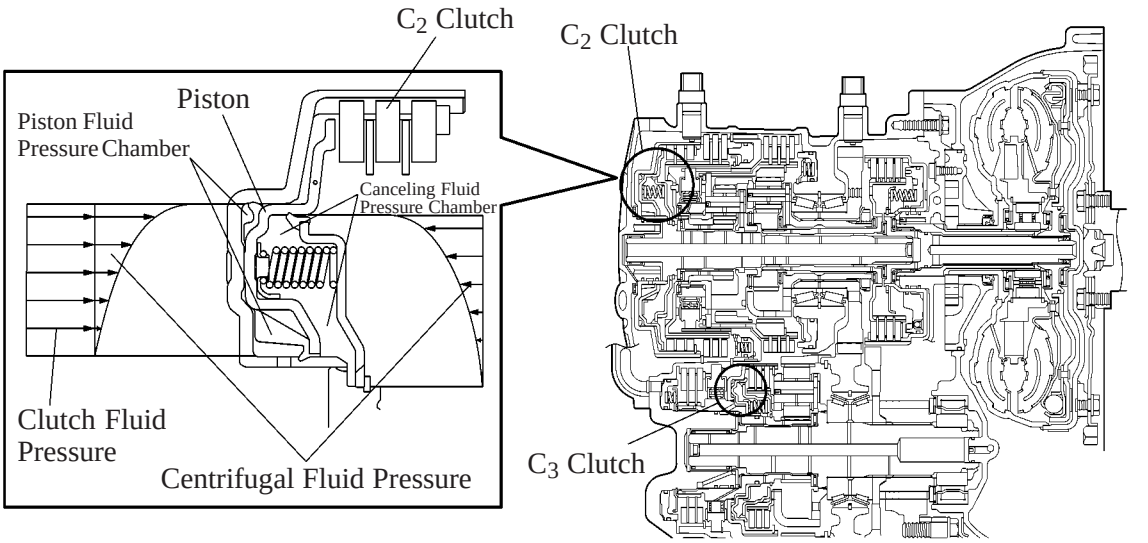

169CH47

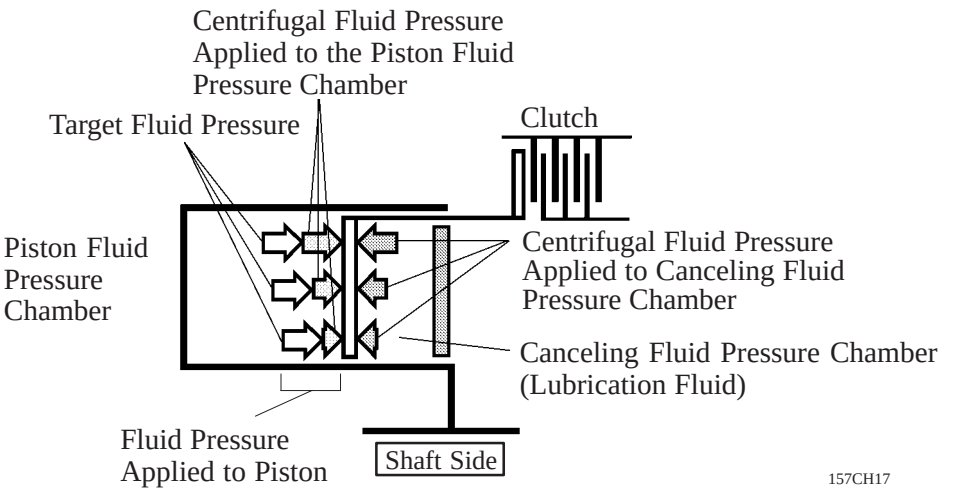

157CH17

Fluid pressure applied to piston	–	Centrifugal fluid pressure applied to canceling fluid pressure chamber	=	Target fluid pressure (original clutch pressure)

5. Line Pressure Optimal Control

The line pressure is controlled by using a solenoid valve SLT. Through the use of the solenoid valve SLT, the line pressure is optimally controlled in accordance with the engine torque information, as well as with the internal operating conditions of the torque converter and the transaxle. Accordingly, the line pressure can be controlled minutely in accordance with the engine output, traveling condition, and the ATF temperature, thus realizing smooth shift characteristics and optimizing the workload on the oil pump.

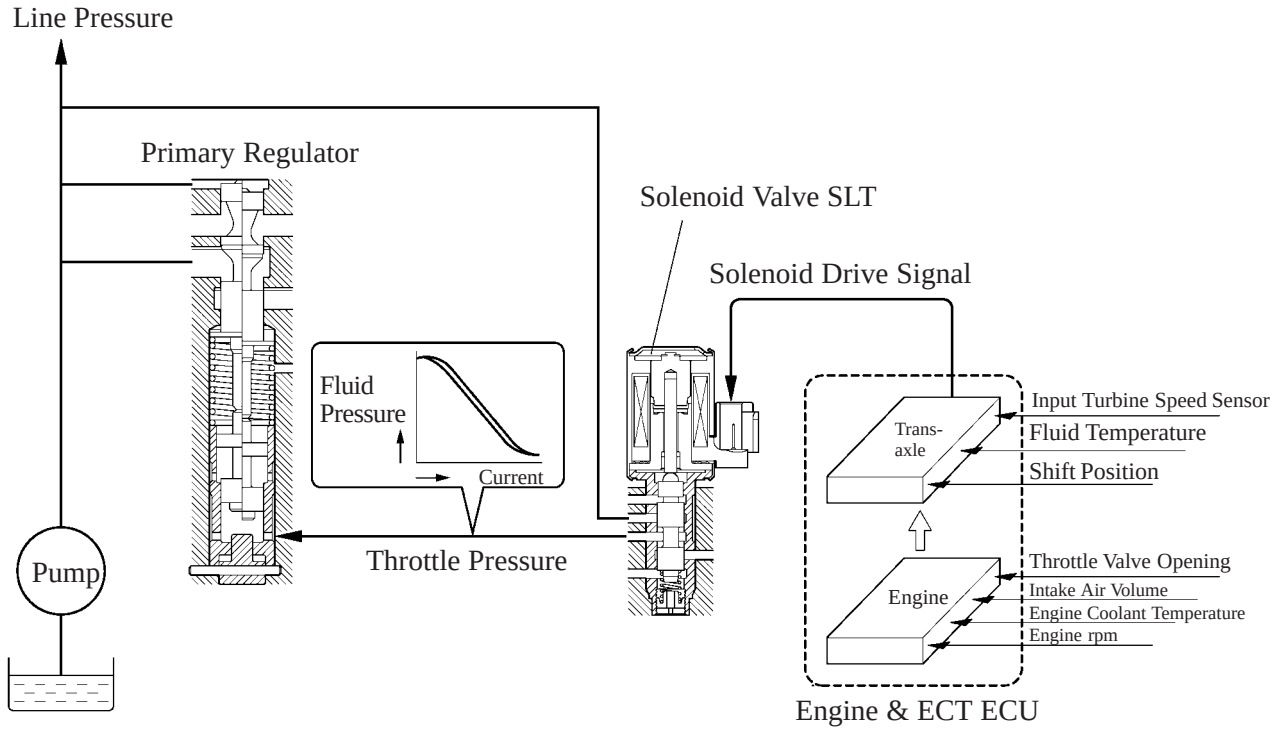

161ES26

CH

■FAIL SAFE FUNCTION

This function minimizes the loss of operability when any abnormality occurs in each sensor or solenoid. Control is effected as follows if a malfunction occurs in the sensors and solenoids:

- During a speed sensor malfunction, the vehicle speed is detected through the signals from the counter gear speed sensor to effect normal control.
- During a counter gear speed sensor malfunction, 4th upshift is prohibited.
- During an ATF temperature sensor malfunction, 4th upshift is prohibited.
- During a malfunction in the solenoid valve SL1, SL2, or S4, the current to the faulty solenoid valve is cut off and control is effected by operating the normal solenoid valves. Shift control is effected as described in the table below, depending on the faulty solenoid.

When all solenoids are normal				When shift solenoid SL1 is abnormal								When SL2 is abnormal				When S4 is abnormal			
				Traveling 3rd or 4th				Traveling 1st or 2nd											
Solenoid			Gear	Solenoid			Gear	Solenoid			Gear	Solenoid			Gear	Solenoid			Gear
SL1	SL2	S4		SL1	SL2	S4		SL1	SL2	S4		SL1	SL2	S4		SL1	SL2	S4	
ON	ON	OFF	1st	×	ON ↓ OFF	OFF	3rd	×*	ON	OFF	2nd	ON ↓ OFF	×	OFF	3rd	ON	ON	×	1st
OFF	ON	OFF	2nd	×	ON ↓ OFF	OFF	3rd	×*	ON	OFF	2nd	OFF	×	OFF	3rd	OFF	ON	×	2nd
OFF	OFF	OFF	3rd	×	OFF	OFF	3rd	×*	OFF ↓ ON	OFF ↓ ON	3rd	OFF	×	OFF	3rd	OFF	OFF	×	3rd
OFF	OFF	ON	4th	×	OFF	ON	4th	×*	OFF ↓ ON	ON	3rd	OFF	×	ON	4th	OFF	OFF	×	3rd

When SL1 and SL2 are abnormal				When SL1 and S4 are abnormal								When SL2 and S4 are abnormal				When SL1, SL2 and S4 are abnormal			
				Traveling 3rd or 4th				Traveling 1st or 2nd											
Solenoid			Gear	Solenoid			Gear	Solenoid			Gear	Solenoid			Gear	Solenoid			Gear
SL1	SL2	S4		SL1	SL2	S4		SL1	SL2	S4		SL1	SL2	S4		SL1	SL2	S4	
×	×	OFF	3rd	×	ON ↓ OFF	×	3rd	×	ON	×	2nd	ON ↓ OFF	×	×	3rd	×	×	×	3rd
×	×	OFF	3rd	×	ON ↓ OFF	×	3rd	×	ON	×	2nd	OFF	×	×	3rd	×	×	×	3rd
×	×	OFF	3rd	×	OFF	×	3rd	×	OFF ↓ ON	×	2nd	OFF	×	×	3rd	×	×	×	3rd
×	×	ON	4th	×	OFF	×	3rd	×	OFF ↓ ON	×	2nd	OFF	×	×	3rd	×	×	×	3rd

*: B_1 is constantly operating.

■ DIAGNOSIS

- The diagnosis system of the U241E automatic transaxle has been adopted the M-OBD (Multiplex On-Board Diagnosis).
- When the engine & ECT ECU detects a malfunction, the engine & ECT ECU makes a diagnosis and memorizes the faild section.
  Furthermore, the check engine warning light in the combination meter illuminates or blinks to inform the driver.
  The engine & ECT ECU will also store the DTCs (Diagnostic Trouble Codes) of the malfunctions.
  The DTCs can be accessed the use of the hand-held tester.

■ ATF WARMER

1. General

An ATF warmer has been adopted for the purpose of warming up the ATF quickly and to set the ATF temperature higher.
As a result, fuel economy has been improved.

▶ Layout of Components ◀

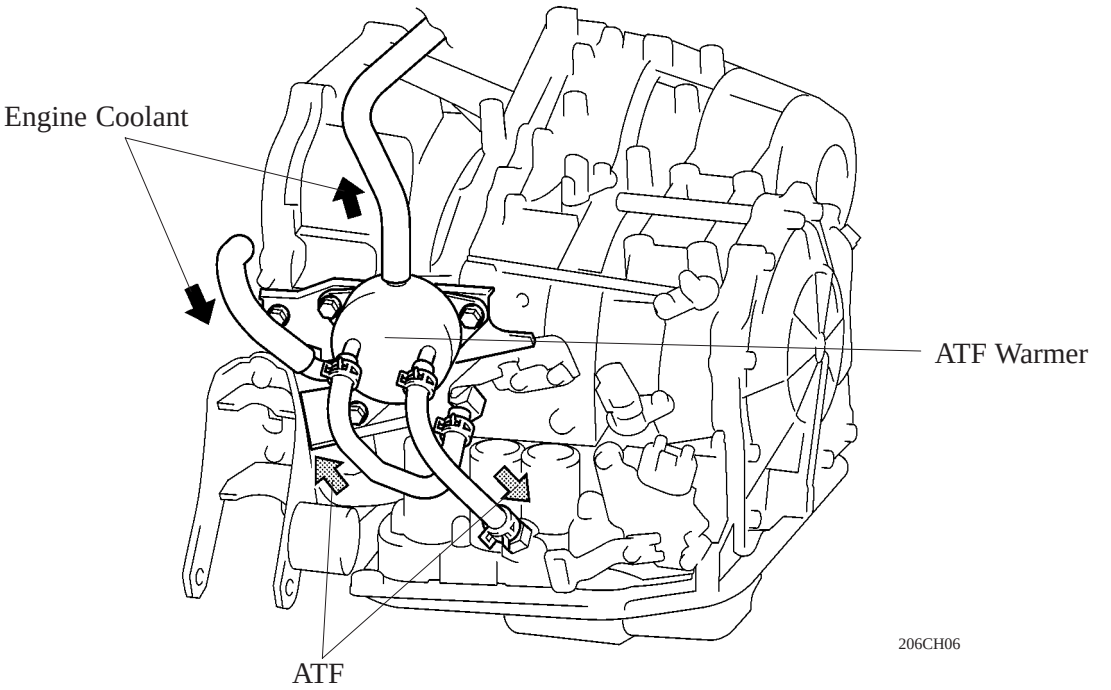

2. Operation

Item	ATF Warmer	Conventional Type
During warm-up	The engine coolant flows directly from the engine to the ATF warmer in order to warm up the ATF quickly even before the thermostat of the engine opens. Consequently, the friction loss of the automatic transaxle is quickly reduced, thus improved fuel economy.	Because the ATF oil cooler is provided in the radiator, the ATF is warmed up only by the actuation of the automatic transaxle oil pump until the thermostat of the engine opens.
After warm-up	The engine coolant flows into the ATF warmer to cool down the ATF before cooling the radiator, thus enables to set up the ATF temperature higher than usual. With this, the friction loss of automatic transaxle will be reduced to improve fuel economy.	After being cooled in the radiator, the engine coolant flows around the ATF oil cooler to cool the ATF.

■OVERDRIVE SWITCH

The overdrive switch has been changed from the previous ON/OFF lock type to the momentary type switch. Pressing the momentary switch closes (turns ON) the contact points, and releasing the switch opens (turns OFF) the contact points. Accordingly, pressing the switch causes the signal to be input into the engine & ECT ECU.

Pressing the switch in overdrive turns OFF the overdrive. Pressing it again turns the overdrive back ON. When the overdrive is OFF, turning the ignition switch from OFF to ON turns the overdrive back ON.

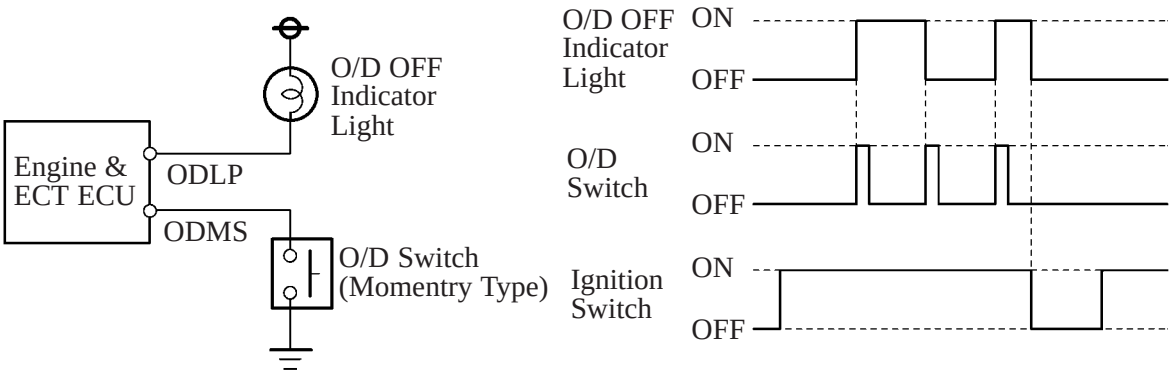

New

172GN01

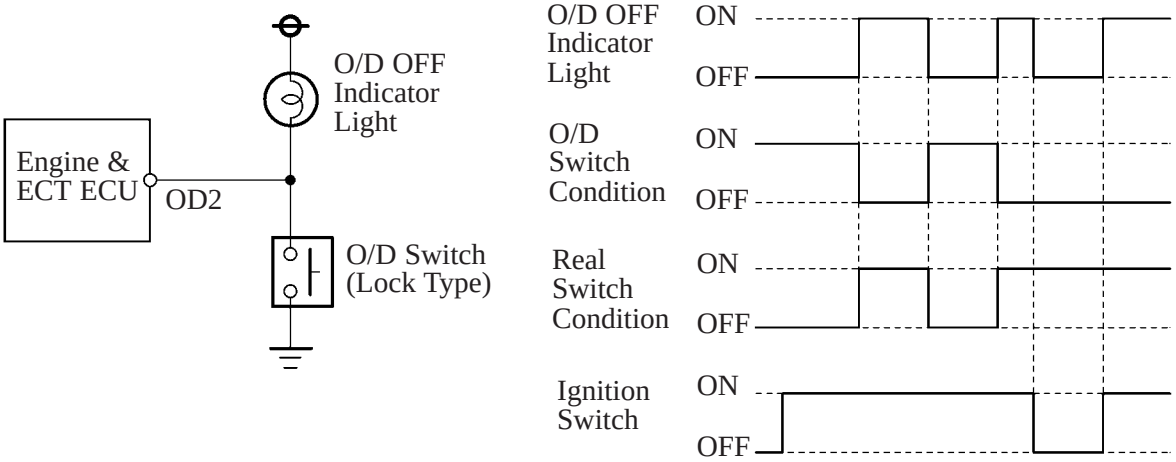

Previous

172GN02

CH

DRIVE SHAFT

■DESCRIPTION

A dynamic damper has been adopted to decrease noise and vibration.

▶ Specifications ◀

Item	1AZ-FE	1CD-FTV
Differential Side	Tripod Type CVJ*1	←
Wheel Side	Rzeppa Type CVJ	←
Dynamic Damper	RH and LH*2	RH and LH

*1: Constant-Velocity Joint
*2: Automatic Transaxle Model Only

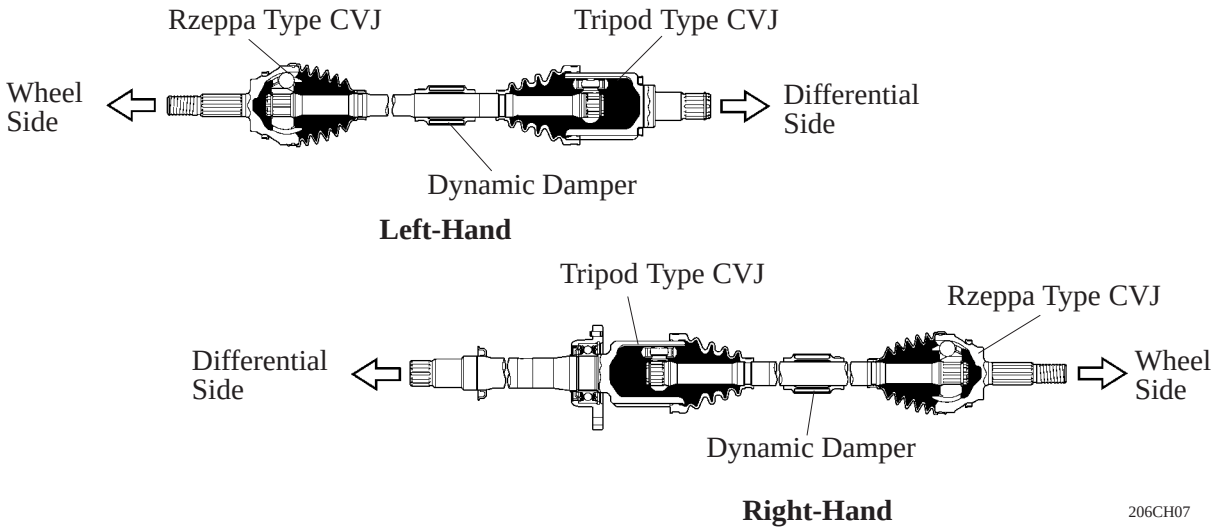

■TRIPOD TYPE CVJ

The tripod type CVJ consisting of a tripod with a spherical tip and double rollers consisting of an outer roller and an inner roller has been adopted for the Avensis Verso/Picnic.
Because the tip of the tripod is spherical, the double roller remains constantly parallel to the outer race groove even if the joint tilts (the illustration at right shows the tripod tilted).
This design enables the double roller to slide smoothly and to realize low vibration at high working angles.

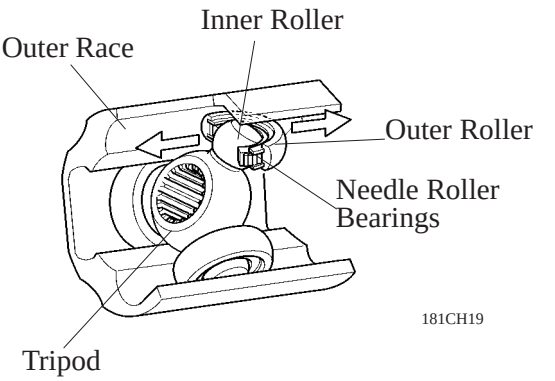

SUSPENSION AND AXLE

■ SUSPENSION

1. General

The table below lists the specifications for the suspension.

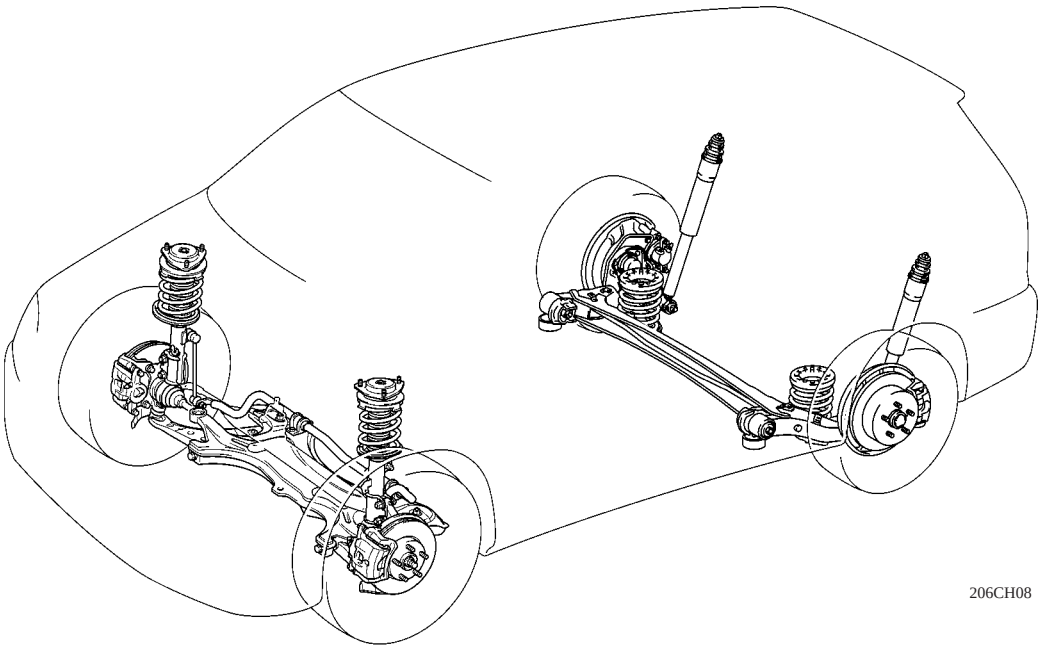

▶ Specifications ◀

Front Suspension	Type		MacPherson Strut
	Stabilizer Bar		STD
	Tread*1	mm (in.)	1505 (59.3)
	Caster*1	degrees	3°03’
	Camber*1	degrees	–0°04’
	Toe-In*1	mm (in.)	1 (0.04)
	King Pin Inclination*1	degrees	10°09’
Rear Suspension	Type		Torsion-Beam
	Stabilizer Bar		STD
	Tread*1	mm (in.)	1498 (58.98)
	Camber*1	degrees	–1°17’
	Toe-In*1	mm (in.)	2.3 (0.09)

*1: Unloaded Vehicle Condition

2. Front Suspension

General

- A MacPherson strut type independent suspension with an L-shaped lower arm, which also provides the function of a strut bar, has been adopted.
- Through the optimal allocation of components, and the adoption of the anti-dive geometry, the front suspension realizes excellent riding comfort, stability, and controllability.
- Low-pressure (N_2) gas sealed shock absorbers with a linear control valve have been adopted.

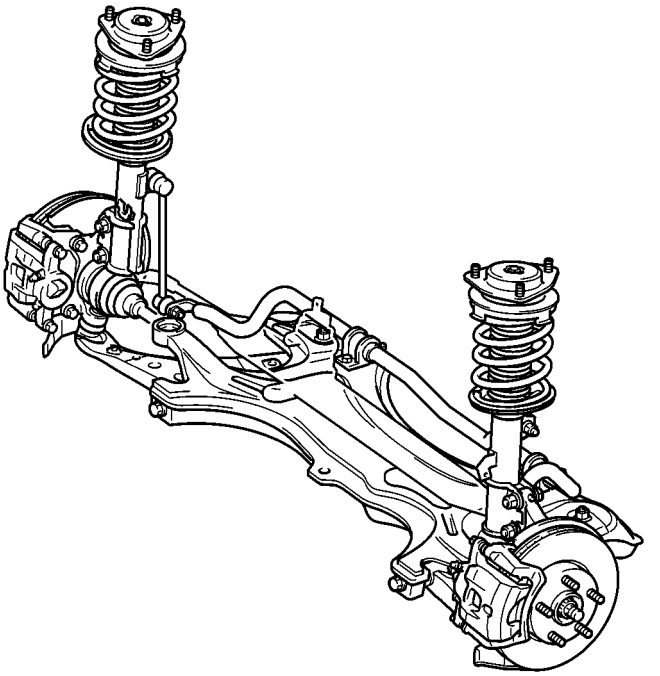

206CH09

Suspension Upper Support and Coil Spring

- The suspension upper support transmits the load that is applied via the spring through its metal structure, while the rubber portion receives only the load that is applied through the shock absorber.
- The center axis of the coil spring is slanted toward the outside of the vehicle compared to the center axis of the shock absorber. This reduces the lateral force bearing on the shock absorber piston rod and piston, and prevents increased sliding resistance while helping to maintain riding comfort.
- The dust cover is designed to completely cover the piston rod to reduce the intrusion of dust and thus realizing excellent durability of the shock absorber.

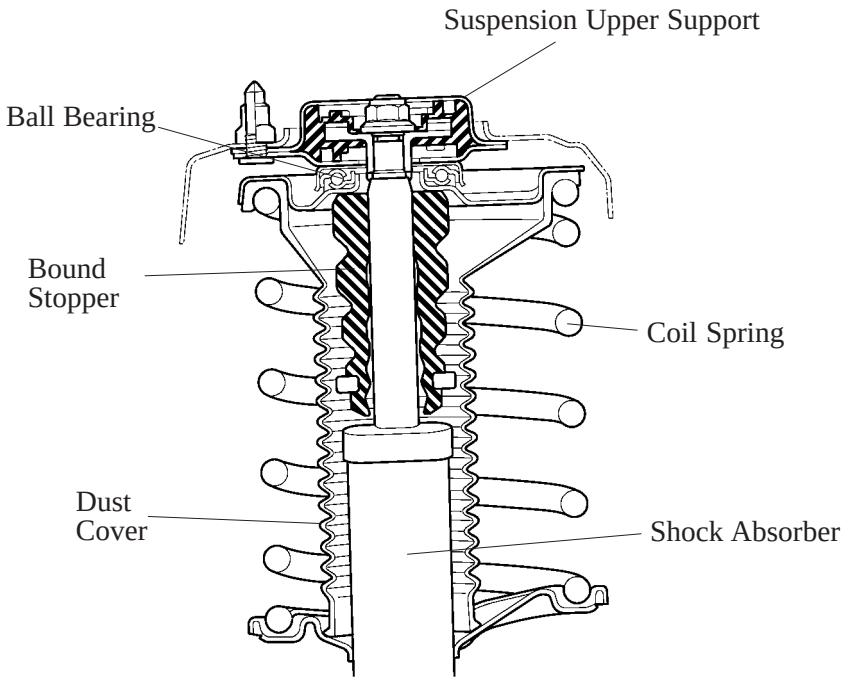

206CH11

Shock Absorber

1) General

The shock absorber has adopted the two functions listed below to realize both driving stability and ride comfort.

- A low-pressure (N_2) gas sealed type construction has been adopted to suppress the generation of cavitation.
- A linear control valve has been adopted to linearize the damping force characteristics

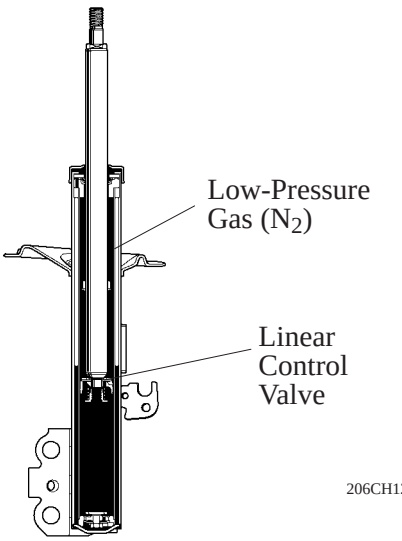

Service Tip

To prevent hazardous conditions, make sure to empty the gas from the shock absorber before discarding a low-pressure (N_2) gas sealed shock absorber. For details, refer to the Avensis Verso/Picnic Chassis & Body Repair Manual (Pub. No. RM864E).

2) Linear Control Valve

The linear control valve consists of a C-valve, a cutout valve, and a leaf valve. These valves have adopted a laminate construction and form orifices. When the vehicle is rolling due to a steering operation, the piston in the shock absorber is in the low-speed state. At that time, the oil flows through the cutouts of the valves to achieve a linear damping force. Through the adoption of the linear control valve, the changes in the damping force are made constant at low piston speed, thus making the vehicle behave more smoothly in relation to the steering operation.

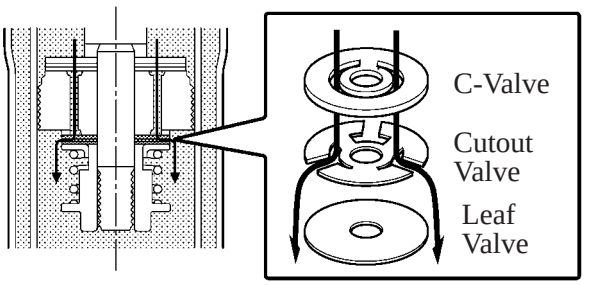

Low Speeds

206CH29

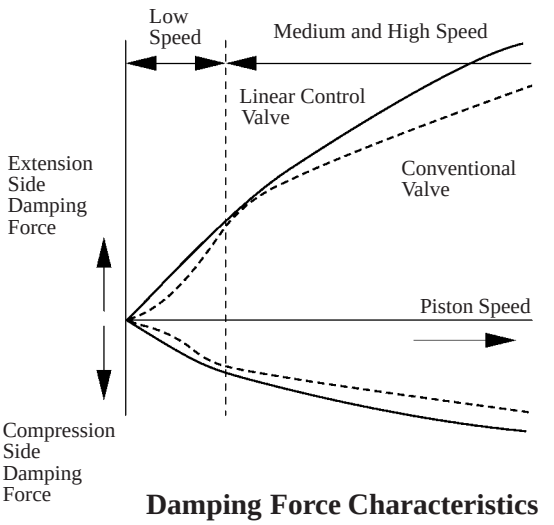

Damping Force Characteristics

199CH110

Lower Arm

- An L-shaped stamped sheet steel lower arm has been adopted.
- Rubber bushings have been adopted, and the mounting position and the construction of the lower arm have been optimized to improve the steering feel.

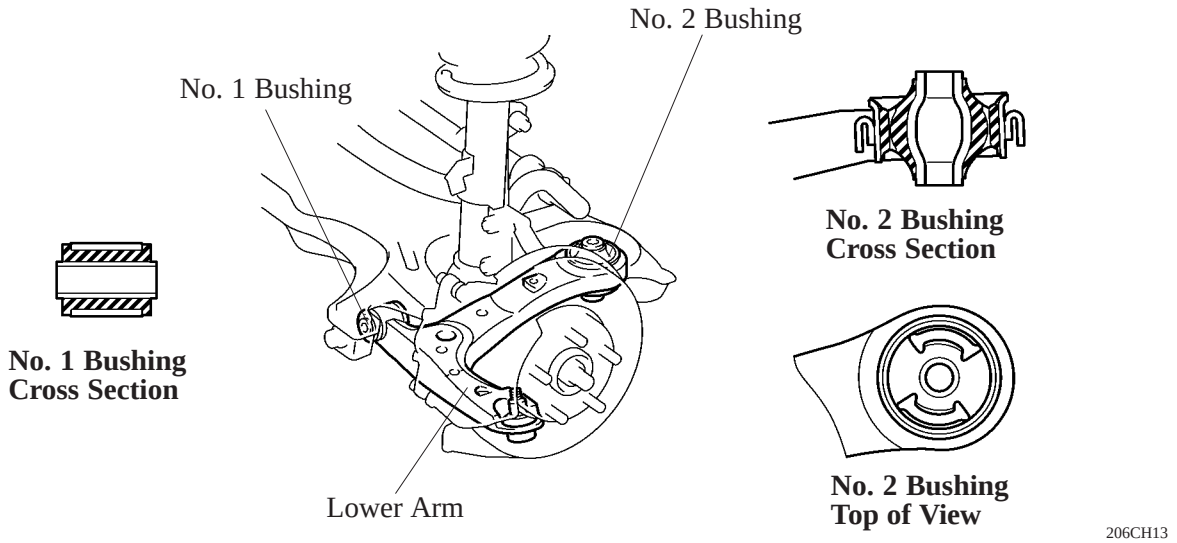

Stabilizer Bar

A ball-joint type stabilizer link has been adopted. Also, by mounting the stabilizer link to the shock absorber, the stabilizing efficiency has been improved while realizing both steering stability and riding comfort.

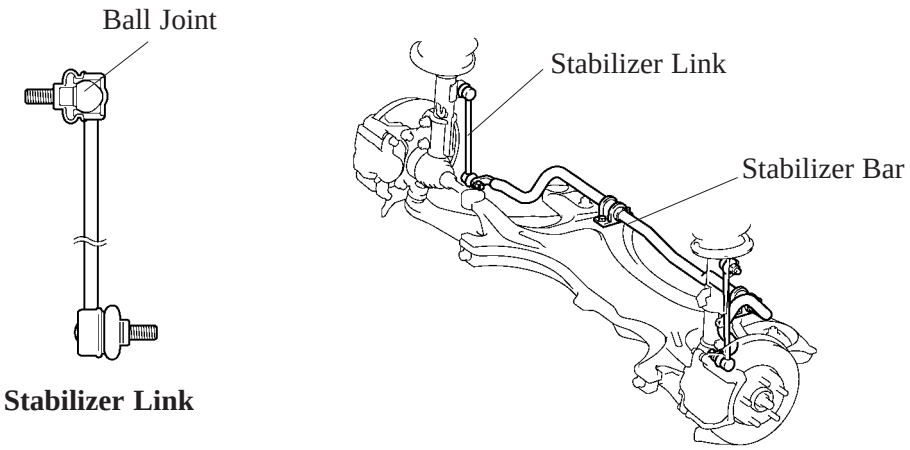

3. Rear Suspension

General

- A torsion beam type suspension has been adopted, in which an axle beam is located in the middle of the trailing arm.
- The coil spring and the shock absorber are positioned separately. In addition, the coil spring is offset from the trailing arm to locate it lower. As a result, a lower floor and a flatter interior have been realized.
- The stabilizer bar has been adopted to realize excellent drivability and stability.
- Through the optimal allocation of components, the optimized changes in toe and camber during bound and rebound, and the adoption of the anti-lift geometry, excellent stability and controllability have been realized.
- A toe-correct function has been adopted in the suspension bushing to realize riding comfort, stability, and controllability.
- A dynamic damper has been adopted under the axle beam bushing to reduce road noise.

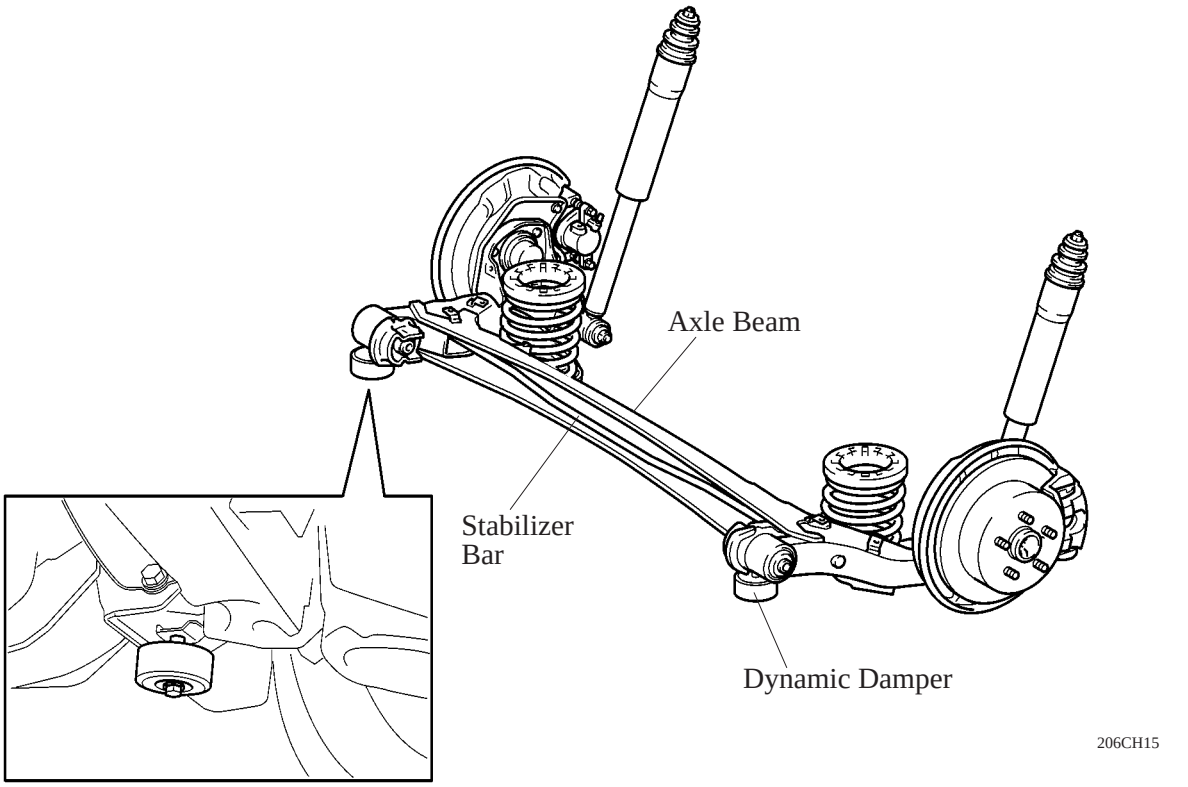

NOTICE

Be sure to use the jack-up points that are provided on the body when raising the vehicle on a jack. Never apply a jack under the axle beam, trailing arm, or the bushing of the rear suspension.

Service Tip

To prevent the dynamic damper from coming in contact with the body, remove the dynamic damper before removing and reinstalling the coil spring. For details, see the Avensis Verso/Picnic Chassis & Body Repair Manual (Pub. No. RM864E).

Toe and Camber Change

This suspension is characterized by the difference in the tire locus behavior, which varies according to whether the right and left wheels undergo the same-direction stroke or an opposite-direction stroke. As a result, this suspension realizes excellent stability both during straightline and cornering operation:

1) Same Direction Stroke (Straightline)

The right and left trailing arms move in the same direction, with the axis on the line which links the bushings at the right and left trailing arm mounting points.
The toe and camber changes that are associated with the same-direction stroke (during straightline driving) are practically constant during bounds and rebounds, which help realize excellent straightline stability.

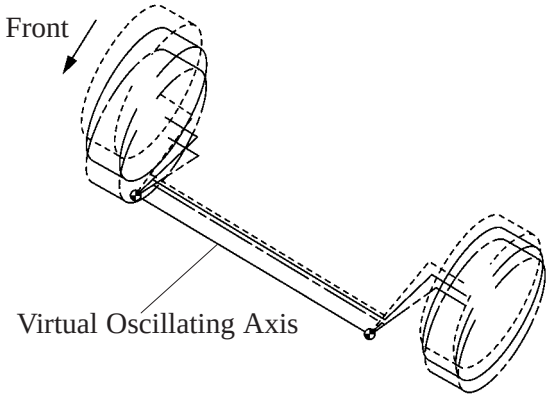

181CH32

2) Opposite Direction Stroke (Cornering)

The right and left trailing arms move in opposite directions, with the center being the line which links the bushings (at the right and left trailing arm mounting points) to the shear center in the middle of the axle beam.
When the vehicle undergoes an opposite direction stroke (during cornering), this suspension allows a greater range in the toe and camber changes occurring in the outer (bound) wheel of the turn, which are caused by the vehicle's postural changes. As a result, excellent maneuverability has been realized.

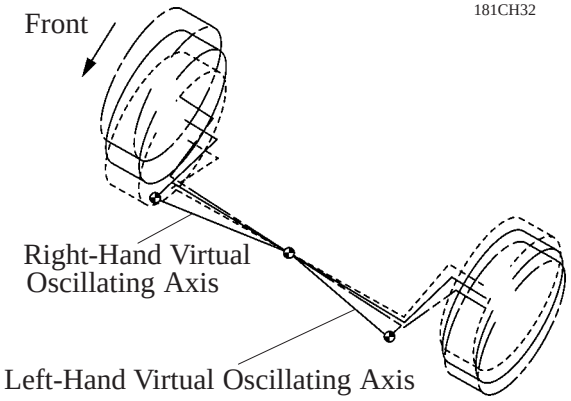

181CH33

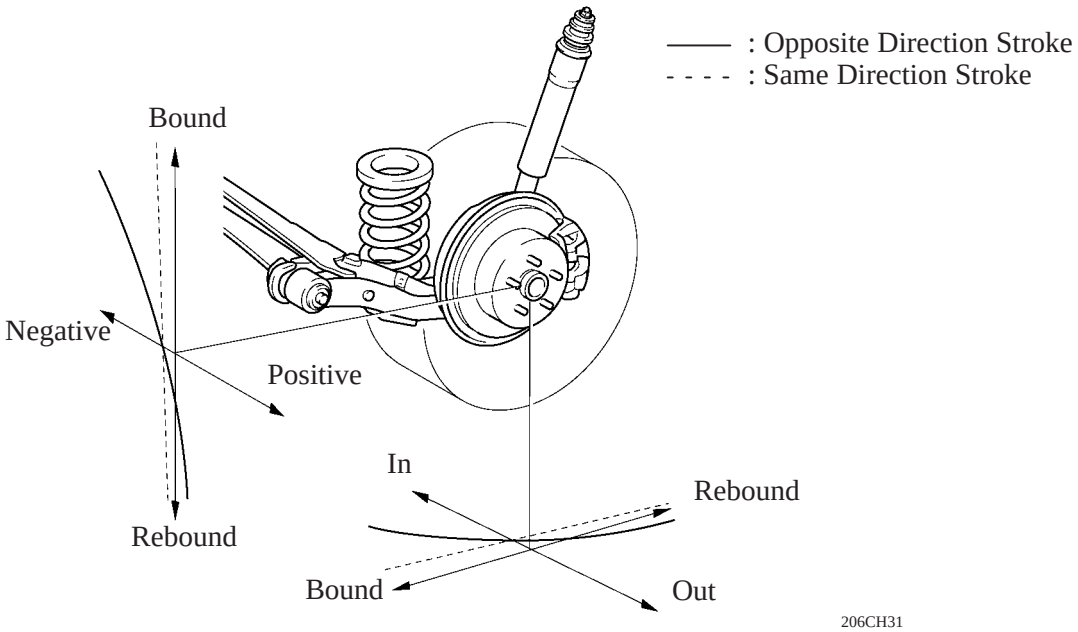

206CH31

Camber Change **Toe Change**

Toe-Correct Function

The longitudinal and lateral forces that are created in the vehicle during cornering causes the bushings in the trailing arms to become deformed.
On a right turn, the right trailing arm moves forward and the left trailing arm moves rearward, creating a tendency for the left wheel to toe out.
In this situation, the bushings that are installed in the trailing arms are designed to utilize the lateral force, which is applied to the bushings during cornering, to correct the left trailing arm towards the toe-in direction.
As a result, excellent stability and controllability are realized.

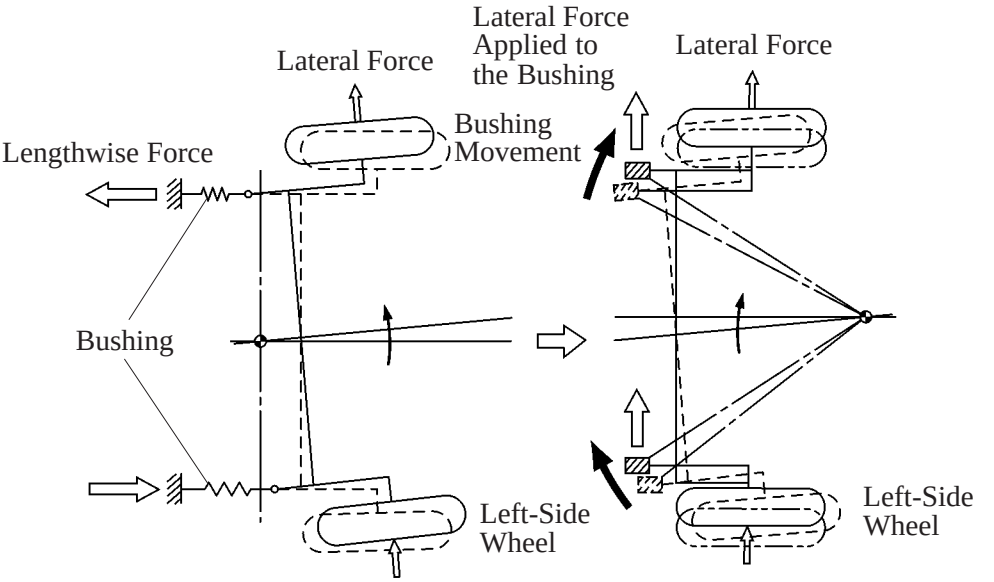

181CH35

Trailing Arm and Axle Beam

A gusset-integrated axle beam has been adopted, and bushings in which rubber and urethane are combined have been adopted. In addition, the rolling rigidity has been optimized through the adoption of the stabilizer bar.

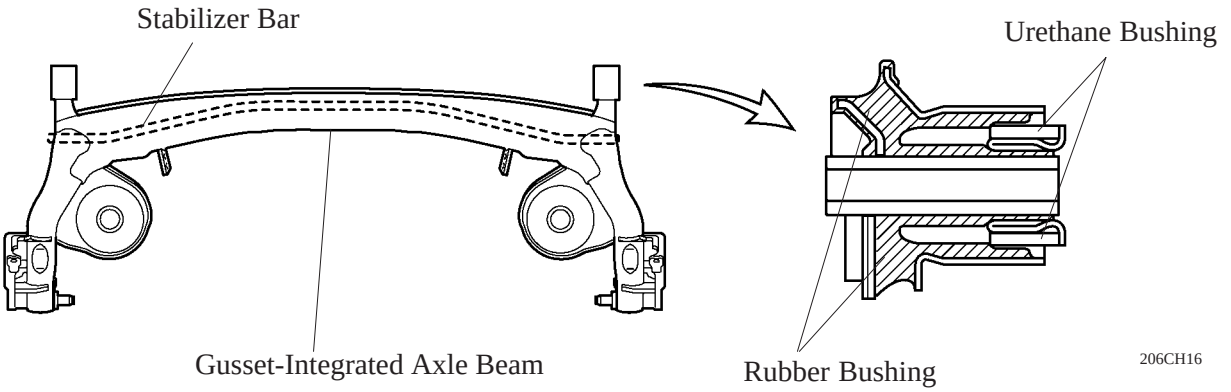

206CH16

■ AXLE

1. Front Axle

- The front axle use a double-row angular ball bearing which offers low rolling resistance.
- A lock nut (12-point) has been adopted and staked for tightening the axle hub in order to ensure the tightening performance. This nut cannot be reused.
- A high-damping grease (which increase the rotational friction torque in proportion to the rise in the frequency of vehicle vibration) is used on the lower ball joint to realize excellent steering feeling and decrease flutter.

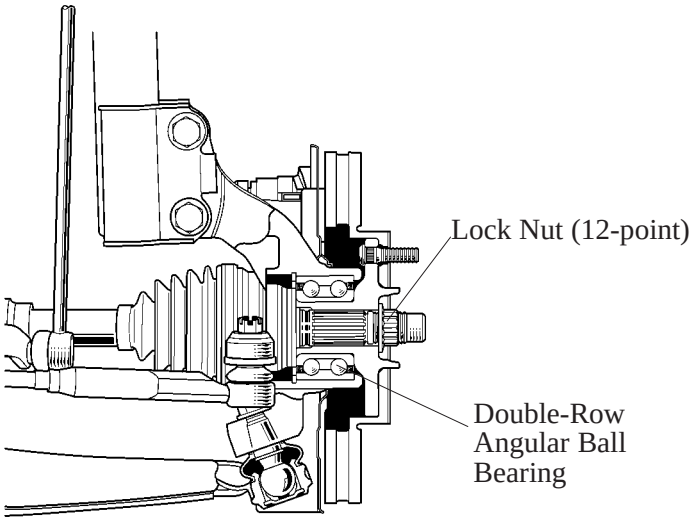

206CH17

2. Rear Axle

- The rear axle use a double-row angular ball bearing which offers low rolling resistance.
- Part of the inner race is integrated with the shaft, thus optimizes the high rigidity.

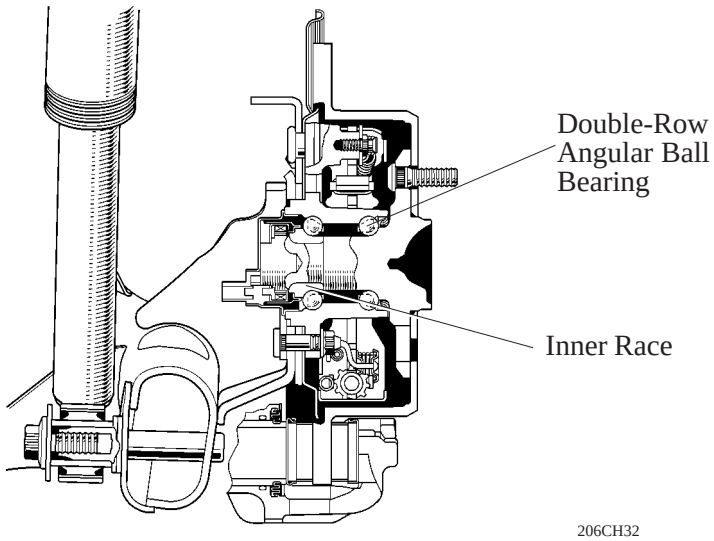

206CH32

BRAKE

■DESCRIPTION

- A small-diameter and long-stroke type master cylinder has been adopted.
- A type of brake booster into which the master cylinder is inserted has been adopted to achieve a compact configuration.

▶ Specifications ◀

Master Cylinder	Type		Tandem
	Diameter	mm (in.)	20.64 (0.81)
Brake Booster	Type		Single
	Size	in.	10”*1 ,9”*2
Front Brake	Type		15” Ventilated Disc
	Caliper Type		Floating Single-Piston
	Wheel Cylinder Dia.	mm (in.)	63.5 (2.5)
	Rotor Size (D × T)*3	mm (in.)	275 × 28 (10.83 × 1.10)
Rear Brake	Type		15” Solid Disc
	Caliper Type		Floating Single-Piston
	Wheel Cylinder Dia.	mm (in.)	42.86 (1.69)
	Rotor Size (D × T)*3	mm (in.)	291 × 12 (11.46 × 0.47)
Parking Brake	Type		Duo-Servo
	Size	mm (in.)	190 (7.48)
	Lever Type		Center Lever
Brake Pedal	Type		Double-Link
ABS*4 with EBD*5 & Brake Assist			Standard

*1: with 1AZ-FE Engine Model
*2: with 1CD-FTV Engine Model
*3: D: Outer Diameter, T: Thickness
*4: ABS: Anti-lock Brake System
*5: EBD: Electronic Brake force Distribution

▶ Layout of Brake System ◀

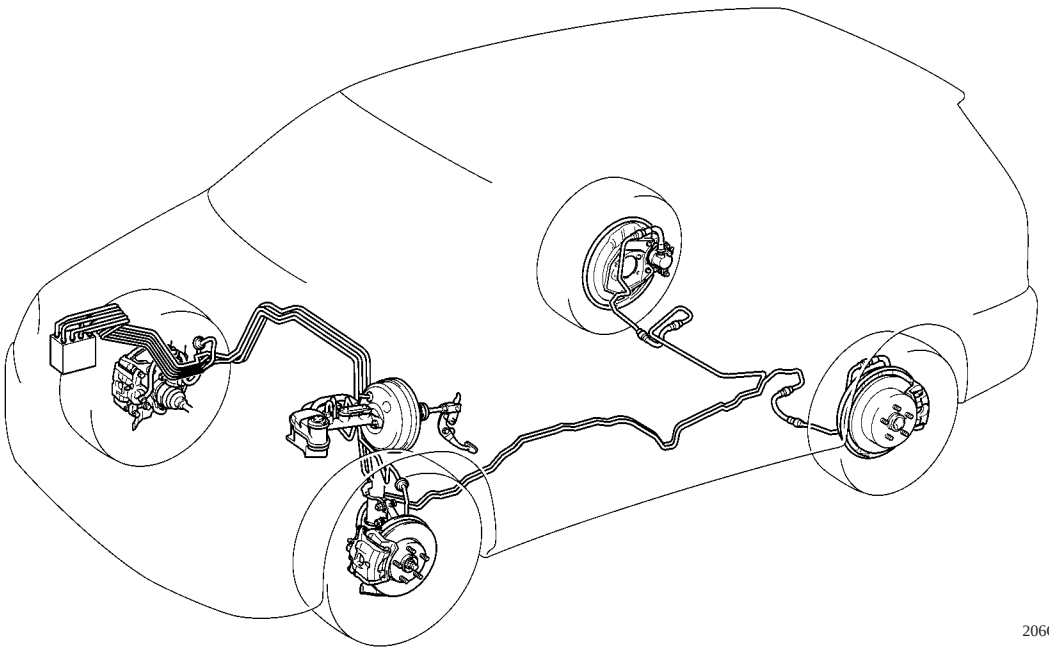

206CH18

LHD Model

▶ Front Brake ◀

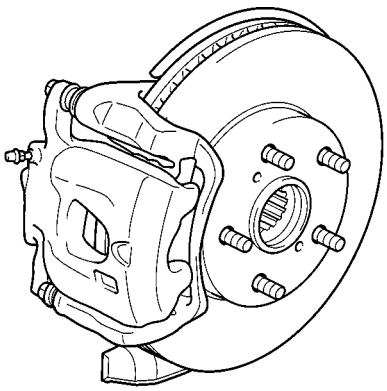

206CH27

▶ Rear Brake ◀

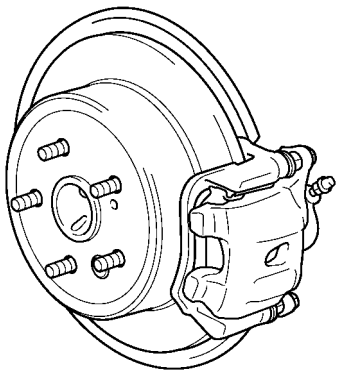

181CH42

■MASTER CYLINDER AND BRAKE BOOSTER

- A small-diameter and long-stroke type master cylinder has been adopted.
  This has been combined with a double-link type variable lever ratio brake pedal to realize excellent brake feeling.
- A type of brake booster into which the master cylinder is inserted has been adopted to achieve a compact configuration.
- The brake master cylinder and the reservoir tank are provided separately to improve serviceability, and the reservoir tank is also shared by the clutch system.

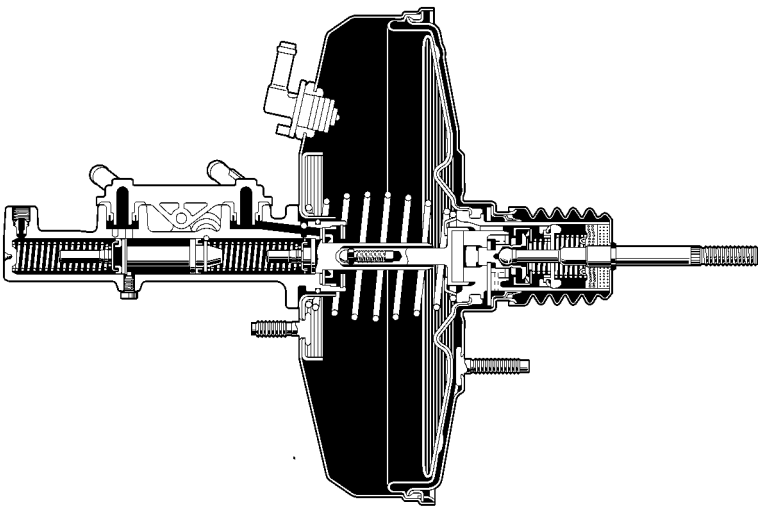

206CH19

■BRAKE PEDAL

1. General

A double-link type variable lever ratio brake pedal has been adopted to provide an excellent brake feeling.

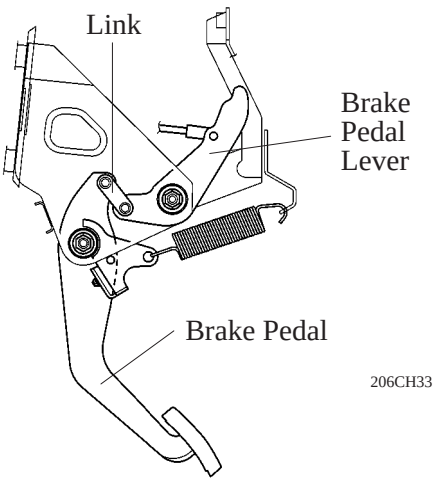

206CH33

2. Construction

The double-link type variable lever ratio brake pedal has adopted a construction in which the brake pedal and brake pedal lever are joined by a link to vary the lever ratio.

3. Operation

When the pedal stroke is small or medium, the lever ratio is increased in order to reduce the pedal effort. When the pedal stroke is large, the lever ratio is decreased to provide ample pedal response.

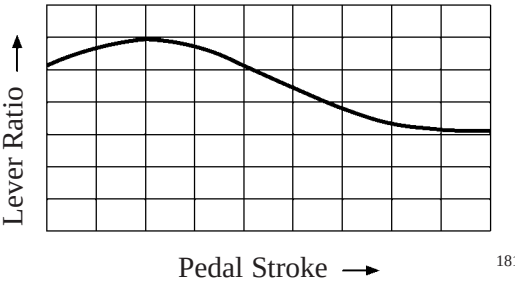

181CH44

■ ABS with EBD & BRAKE ASSIST SYSTEM

1. General

- The ABS helps prevent the wheels from locking when the brakes are applied firmly or when braking on a slippery surface.
- The EBD control utilizes ABS, realizing the proper brake force distribution between front and rear wheels in accordance with the driving conditions.
  In addition, during cornering braking, it also controls the brake forces of right and left wheels.
- The primary purpose of the Brake Assist system is to provided an auxiliary brake force assist to the driver who cannot generate a large brake force during emergency braking, thus maximizing the vehicle's brake performance.

2. System Diagram

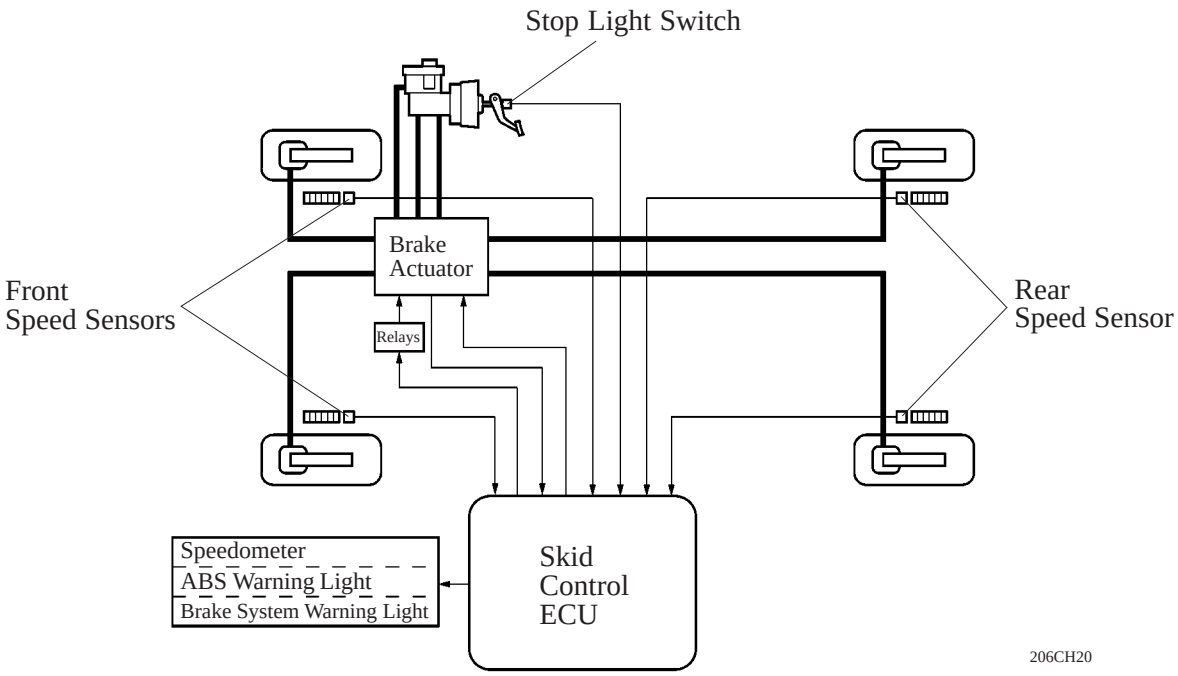

3. Outline of EBD Control

General

The distribution of the brake force, which was performed mechanically in the past, is now performed under electrical control of the skid control ECU, which precisely controls the braking force in accordance with the vehicle's driving conditions.

Front/Rear Wheels Brake Force Distribution

If the brakes are applied while the vehicle is moving straight forward, the transfer of the road reduces the load that is applied to the rear wheels. The skid control ECU determines this condition by way of the signals from the speed sensor, and the brake actuator regulates the distribution of the brake force of the rear wheels to optimally control.
For example, the amount of the brake force that is applied to the rear wheels during braking varies whether or not the vehicle is carrying a load. The amount of the brake force that is applied to the rear wheels also varies in accordance with the extent of the deceleration. Thus, the distribution of the brake force to the rear is optimally controlled in order to effectively utilize the braking force of the rear wheels under these conditions.

▶ EBD Control Concept ◀

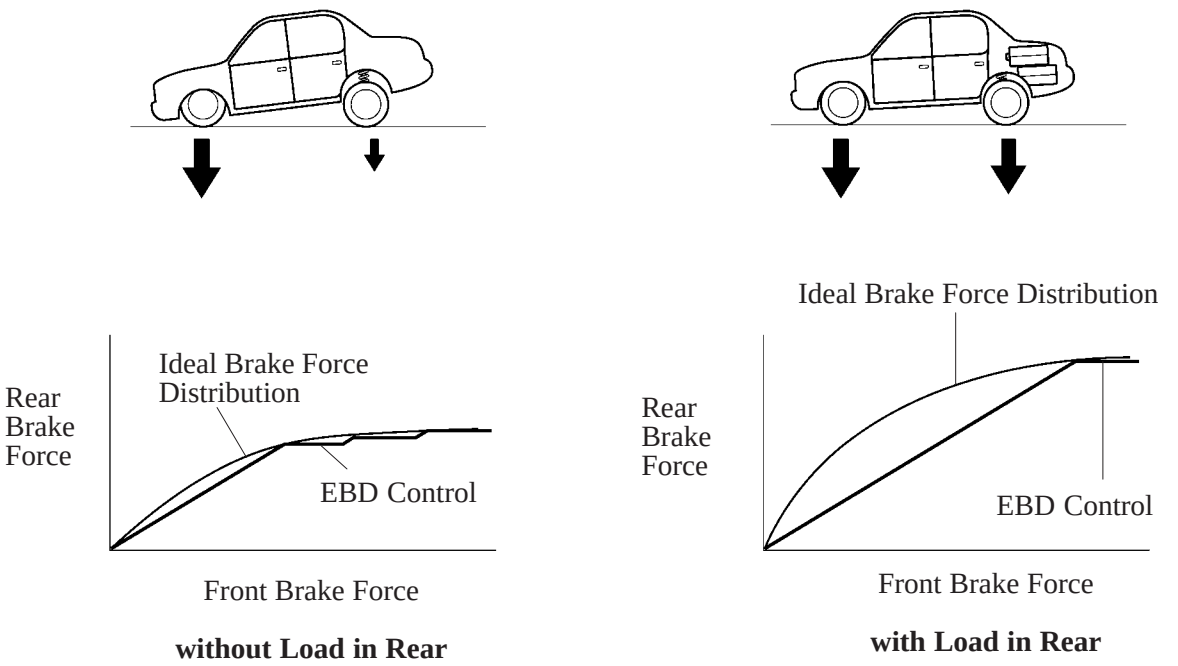

182CH56

Right/Left Wheels Brake Force Distribution (During Cornering Braking)

When the brakes are applied while the vehicle is cornering, the load that applied to the inner wheel decreases while that to the outer wheel increases. The skid control ECU determines this condition by way of the signals from the speed sensor, and the brake actuator regulates the brake force in order to optimally control the distribution of the brake force to the inner wheel and outer wheel.

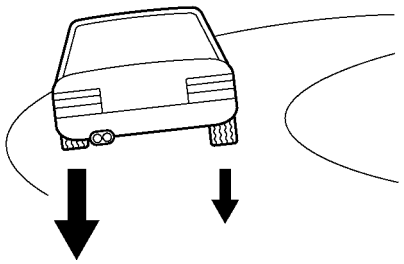

181CH56

4. Outline of Brake Assist System

Brake Assist system interprets a quick push of the brake pedal as emergency braking and supplements the braking power applied if the driver has not stepped hard enough on the brake pedal.
In emergencies, drivers, especially inexperienced ones, often panic and do not apply sufficient pressure on the brake pedal.
Brake Assist system measures the speed and force with which the brake pedal is pushed to determine whether the driver is attempting to brake rapidly, and applies additional pressure to maximize braking performance.
A key feature of Brake Assist system is that the timing and the degree of braking assistance are designed to ensure that the driver does not discern anything unusual about the braking operation.
When the driver intentionally eases up on the brake pedal, the system reduce the amount of assistance it provides.

— REFERENCE —

Effectiveness of the Brake Assist Operation:

a. During emergency braking, an inexperienced driver, or a driver in a state of panic might not be able to firmly depress the brake pedal, although driver can depress it quickly. As a result, only a small amount of brake force is generated.

b. The pedal effort of this type of driver might weaken as time passes, causing a reduction in the braking force.

c. Based on how quickly the brake pedal is depressed, the Brake Assist operation assesses the intention of the driver to apply emergency braking and increases the brake force.

d. After the Brake Assist operation, if the driver intentionally release the brake pedal, the assist operation reduces the amount of Brake Assist in order to reduce the feeling of uneasiness.

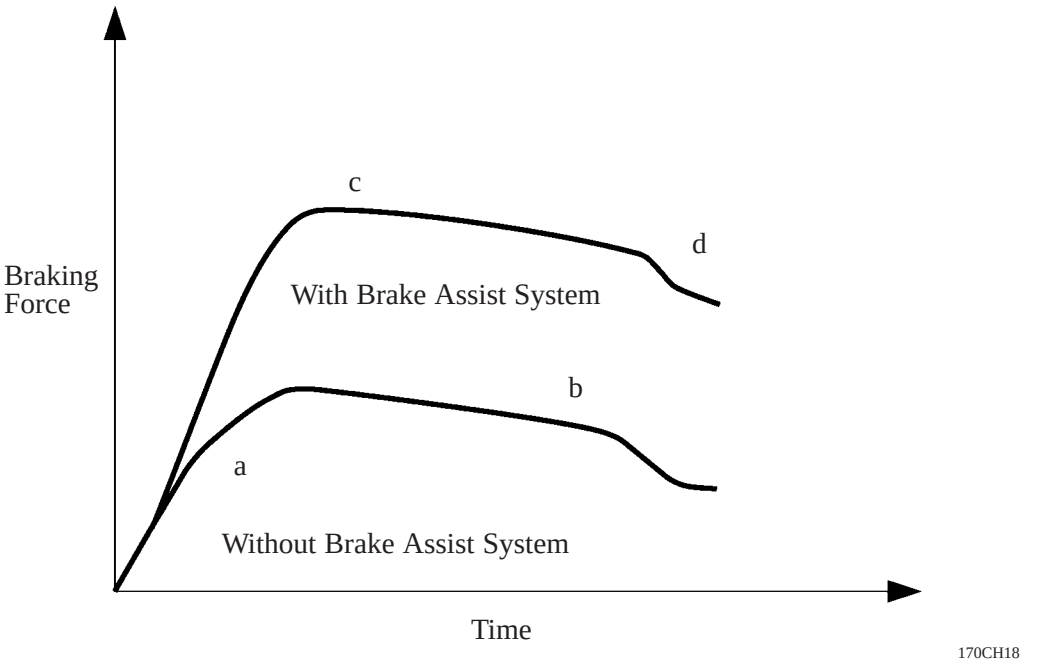

Service Tip

When this system is activated, the brake pedal could shudder, which is a normal occurrence of the system in operation and should not be considered a malfunction.

5. Layout of Component

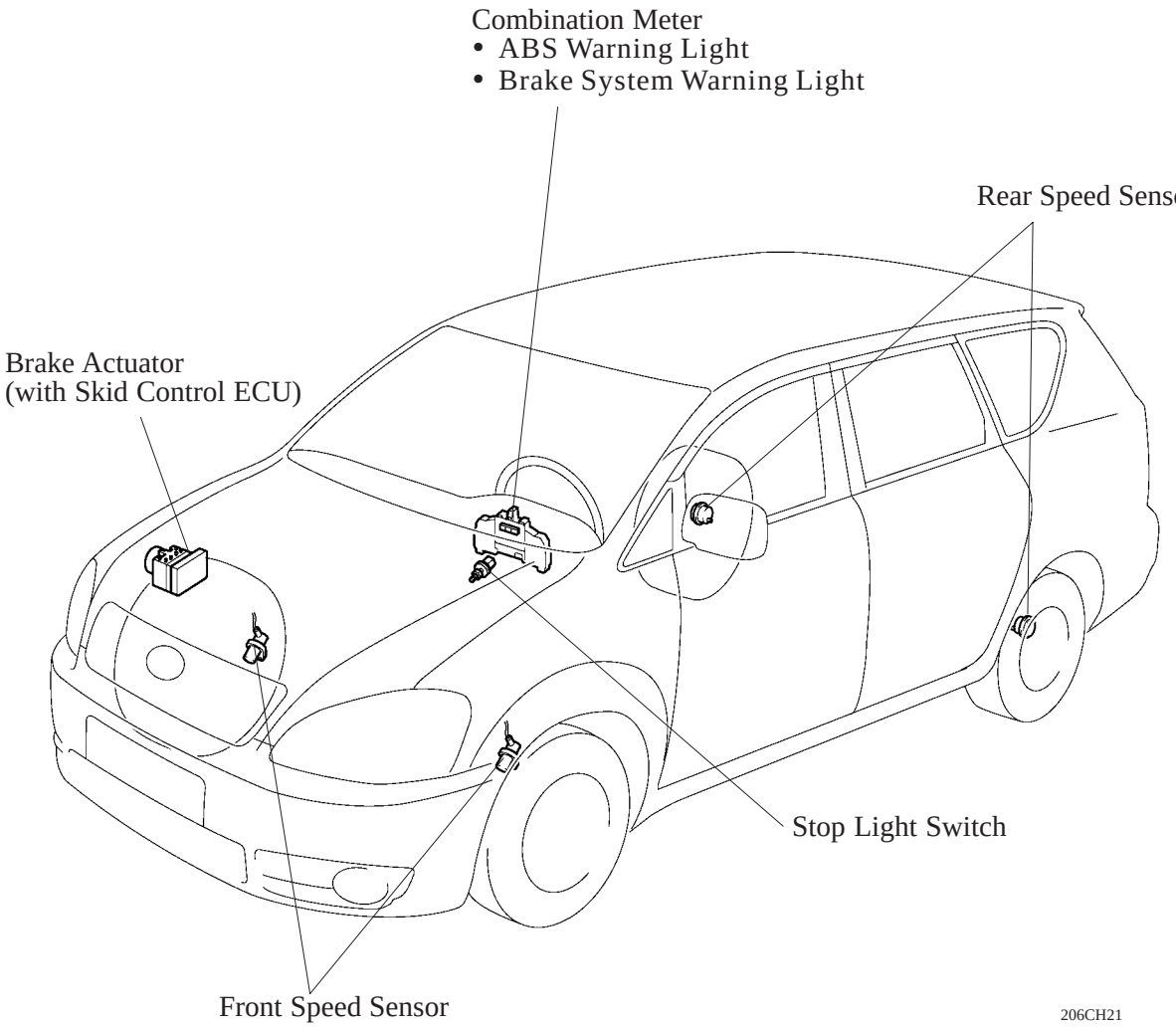

6. Function of Components

Components		Function
Warning Light	ABS Warning Light	Lights up to alert the driver when the ECU detects the malfunction in the ABS or Brake Assist system.
	Brake System Warning Light	Lights up together with the ABS warning light to alert the driver when the ECU detects the malfunction not only in the ABS but also in the EBD control.
Skid Control ECU		Judges the vehicle driving condition based on signals from each sensor, and sends brake control signal to the brake actuator.
Brake Actuator		Changes the fluid path based on the signals from the skid control ECU during the operation of the ABS with EBD & Brake Assist system, in order to control the fluid pressure that is applied to the wheel cylinder.
	Master Cylinder Pressure Sensor	Assembled in the brake actuator and detects the master cylinder pressure.
Control Relay	Pump Motor Relay	Supply power to the pump motor in the actuator.
	Solenoid Relay	Supply power to the solenoid valves in the actuator.
Speed Sensor		Detects the wheel speed of each of four wheels.
Stop Light Switch		Detects the brake depressing signal.

7. Brake Actuator

Hydraulic Circuit

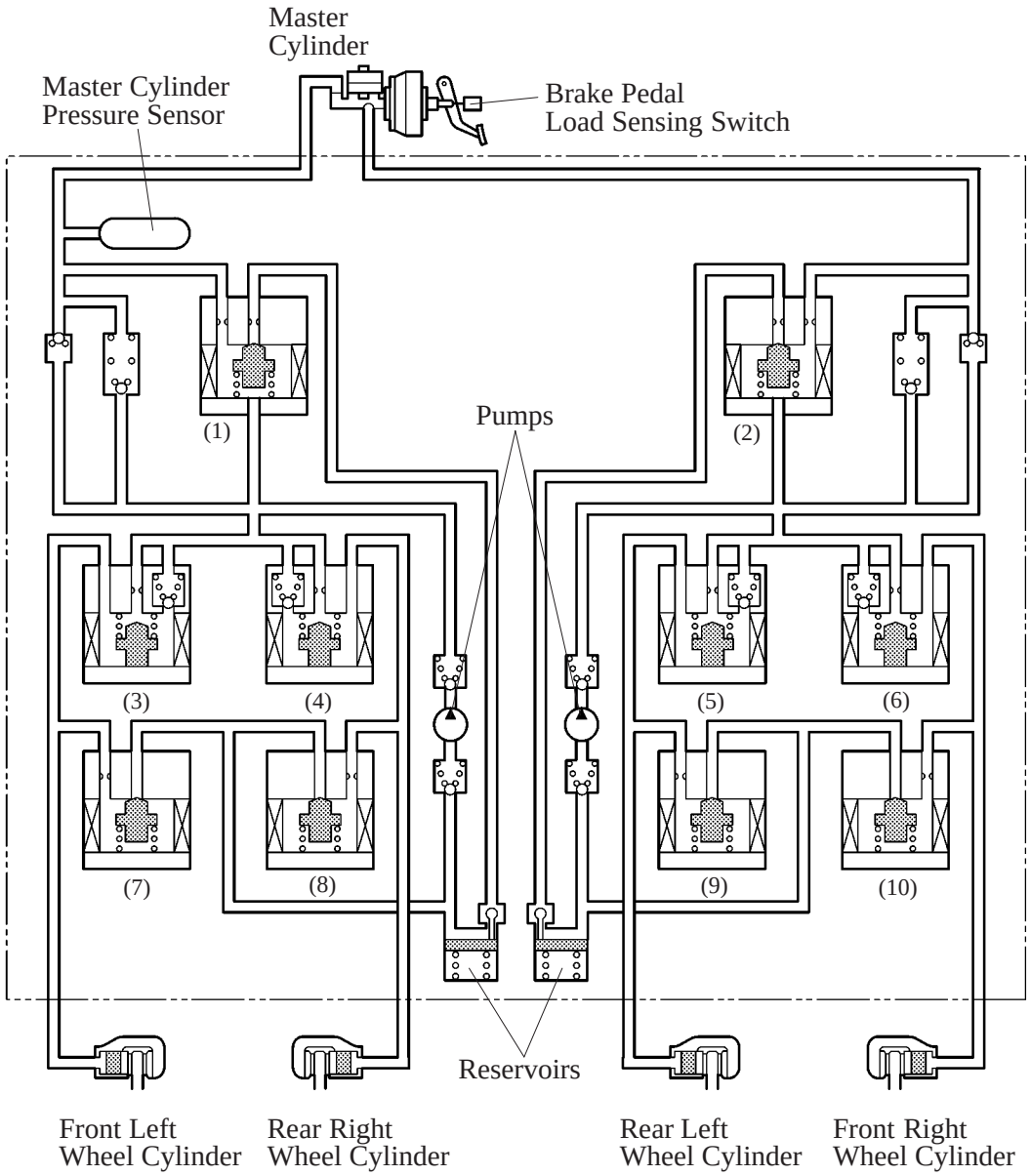

206CH23

Type	10 two-piston solenoid valves, 1 motor 2 pumps, 2 reservoirs, and master cylinder pressure sensor
(1), (2)	Brake Assist Switching Solenoid Valve
(3), (4), (5), (6)	Pressure Holding Valve
(7), (8), (9), (10)	Pressure Reduction Valve

ABS with EBD Operation

Based on the signals received from the 4 wheel speed sensors, the skid control ECU calculates each wheel speed, and checks wheel slipping condition. And according to the slipping condition, the ECU controls the pressure holding valve and pressure reduction valve in order to adjust the fluid pressure of each wheel cylinder in the following 3 modes: pressure reduction, pressure holding, and pressure increase modes.

Not Activated	Normal Braking	—	—
Activated	Pressure Increase Mode	Pressure Holding Mode	Pressure Reduction Mode
Hydraulic Circuit	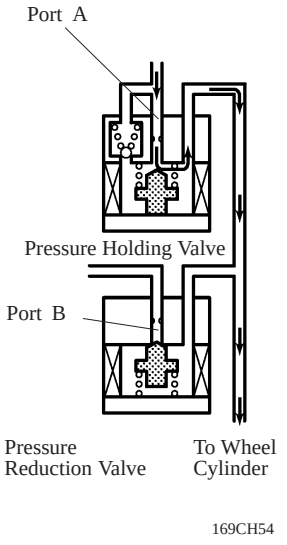	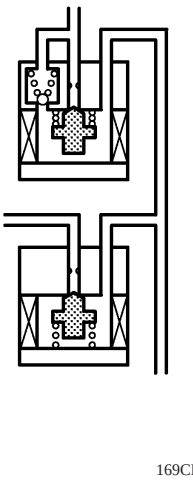	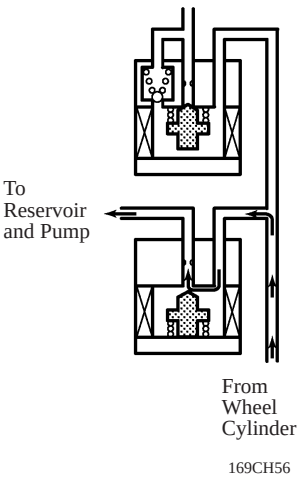
Pressure Holding Valve (Port A)	OFF (Open)	ON (Close)	ON (Close)
Pressure Reduction Valve (Port B)	OFF (Close)	OFF (Close)	ON (Open)
Wheel Cylinder Pressure	Increase	Hold	Reduction

Brake Assist Operation

The fluid pressure that has been generated by the pump in the brake actuator is directed to the wheel cylinders. By applying a greater fluid pressure than the master cylinder, a greater braking force is achieved.

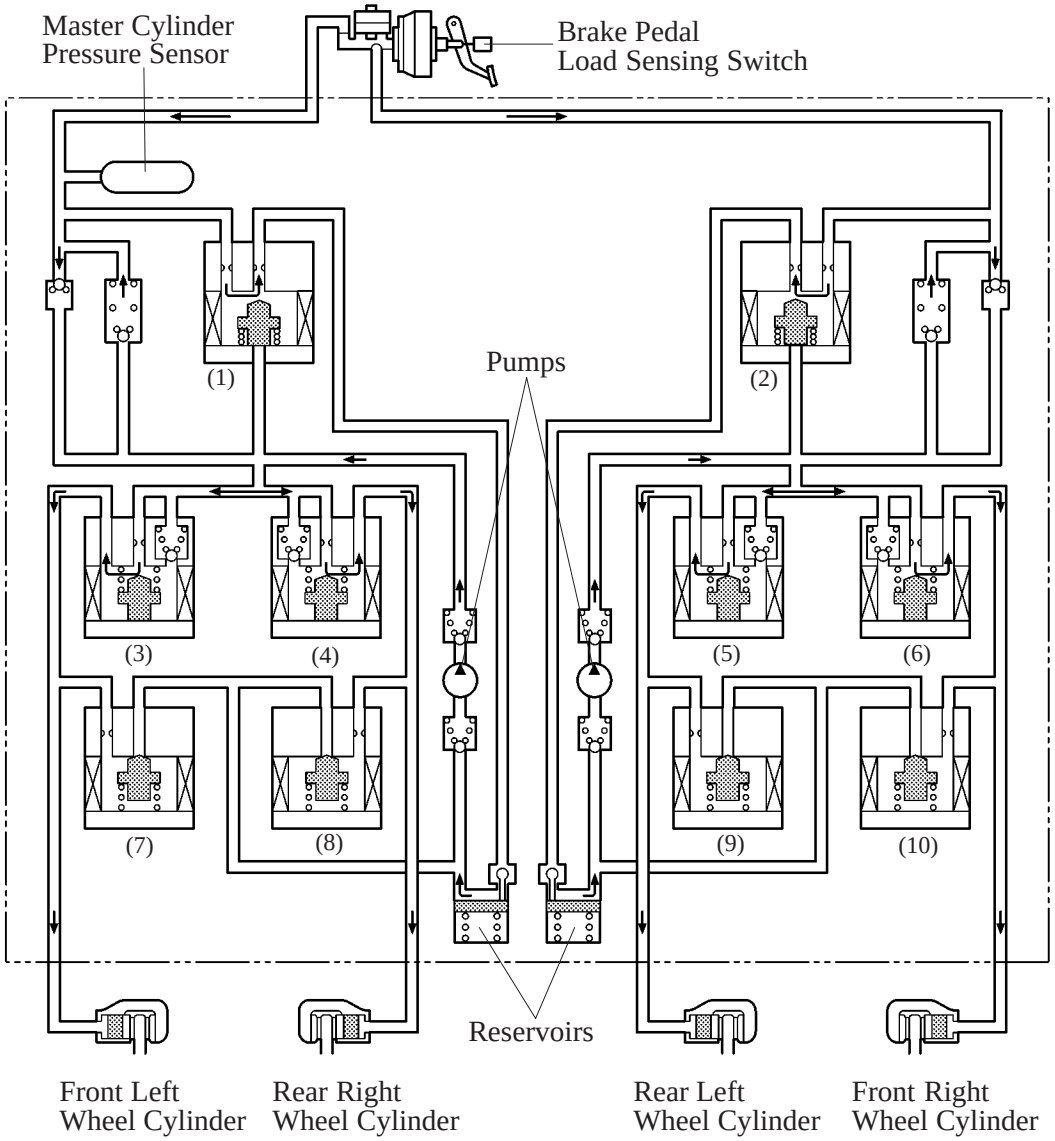

▶ System Diagram ◀

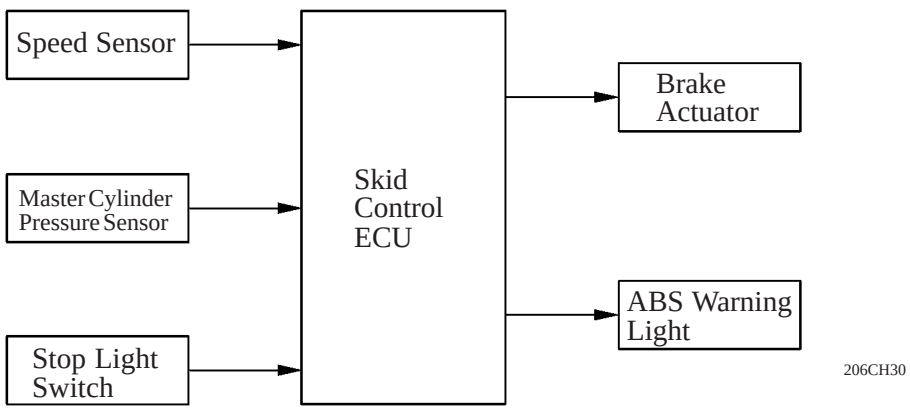

Item		Brake Assist Not Activated	Brake Assist Activated
(1) (2)	Brake Assist Switching Solenoid Valve	OFF (Close)	ON (Open)
	Port: (A), (B)		
(3), (4) (5), (6)	Pressure Holding Valve	OFF (Open)	OFF (Open)
	Port: (C), (D), (E), (F)		
(7), (8) (9), (10)	Pressure Reduction Valve	OFF (Close)	OFF (Close)
	Port: (G), (H), (I), (J)		

8. Skid Control ECU

Initial Check

After the ignition switch is turned ON, and the vehicle attains an approximate speed of 6 km/h (4 mph) or more only at first time, the skid control ECU performs an initial check.
The functions of each solenoid valve and pump motor in the actuator are checked in order.

Self-Diagnosis

- If the skid control ECU detects a malfunction in the ABS with EBD and Brake Assist system, the warning light that corresponds to the function in which the malfunction has been detects lights up, as indicated in the table below, to alert the driver of the malfunction.

○: Light ON —: Light OFF

Item	ABS	EBD	Brake Assist
ABS Warning Light	○	○	○
Brake System Warning Light	—	○	—

- If the skid control ECU detects a malfunction in this system, it illuminates the warning light to alert the driver. At the same time, the DTCs (Diagnostic Trouble Codes) are stored in memory.
  The DTCs can be read by connecting the SST (09843-18040) between the TC and CG terminals of DLC3 and observing the blinking ABS warning light, or by connecting a hand-held tester.
- This system has a sensor signal check function. The operation method of this function is the same as of the above.
- For details on the DTCs that are stored in skid control ECU memory and DTCs that are output through the sensor signal check function, see the Avensis Verso/Picnic Chassis & Body Repair Manual (Pub. No. RM864E).

Fail-Safe

In the event of a malfunction in the skid control ECU turns on the ABS warning light and prohibits the ABS and Brake Assist. In the case of the malfunction that the EBD control can not be carried out, the ECU also turns on the brake system warning light and prohibits the EBD control.

STEERING

■DESCRIPTION

- A rack and pinion type steering gear is used. An engine revolution sensing type power steering is used on all models.
- The stepless tilt steering is used on all models.
- The steering column has adopted an energy absorbing mechanism that uses energy absorbing plate.

▶ Specifications ◀

Gear Ratio (Overal)		16.2 or 16.7
No. of Turns Lock to Lock		3.2 or 3.3
Rack Stroke	mm (in.)	138.0 (5.43)
Fluid Type		ATF Type DEXRON®II or III

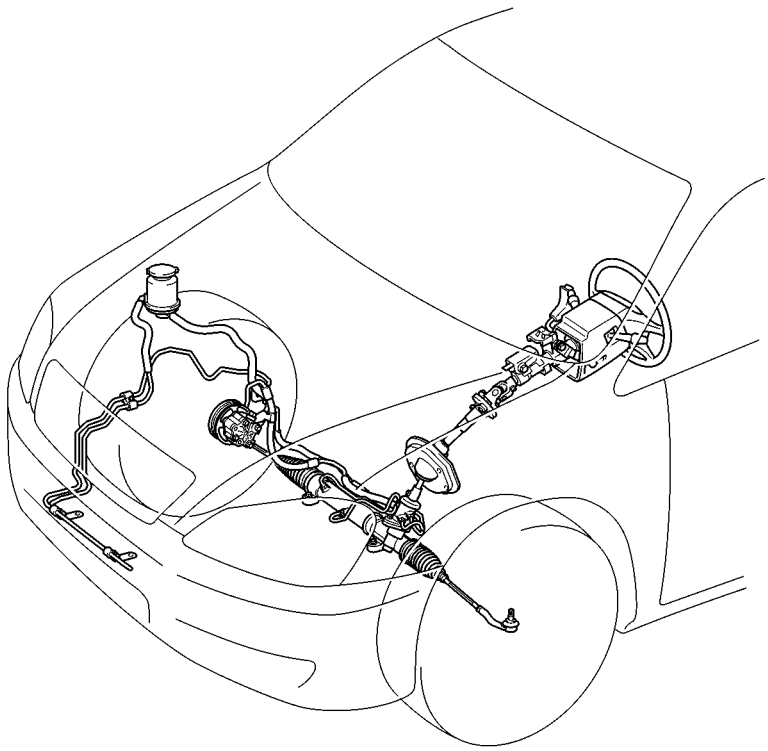

206CH25

LHD Model (1AZ-FE Engine)

■ STEERING GEAR

A low friction rack guide and a cold-forged pinion have been adopted in the power steering gear, and the shape of the valve has been optimized. Also, internal-external tube bushing have been adopted for mounting the steering gear assembly on the vehicle. A natural steering feeling has been realized through these features.

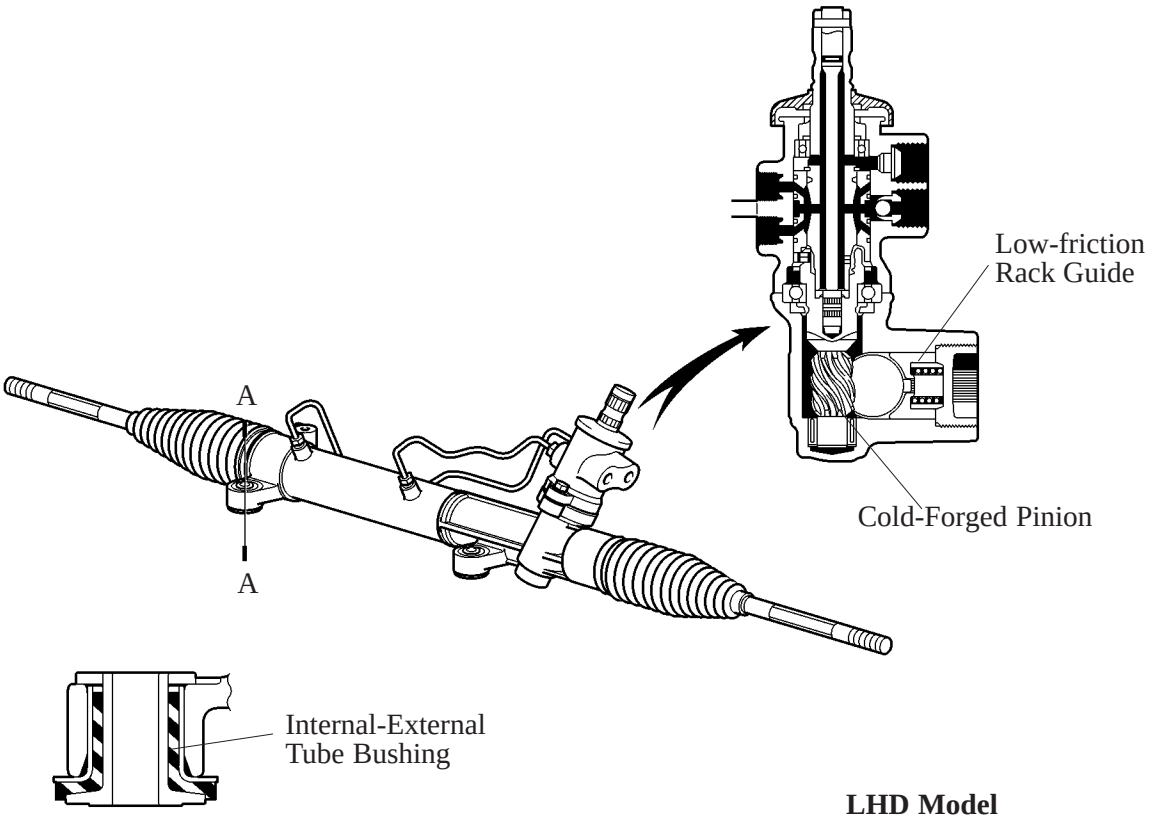

LHD Model

A – A Cross Section

206CH26

■ TILT STEERING

The tilt mechanism mainly consists of a tilt lever, steering column tube attachment, breakaway bracket, tilt lever lock bolt and tilt steering stoppers.
When the tilt mechanism is in its locked state, the tilt lever at B position causes the cam of the tilt steering stoppers to tighten the steering column tube attachment.
When the tilt mechanism is in its free state, the tilt lever at A position causes the cam of the tilt steering stopper to loosen the steering column tube attachment.

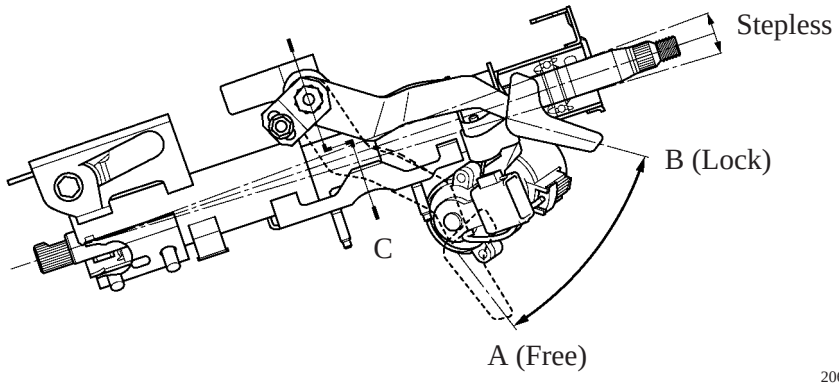

206CH34

▶ C – C Cross Section ◀

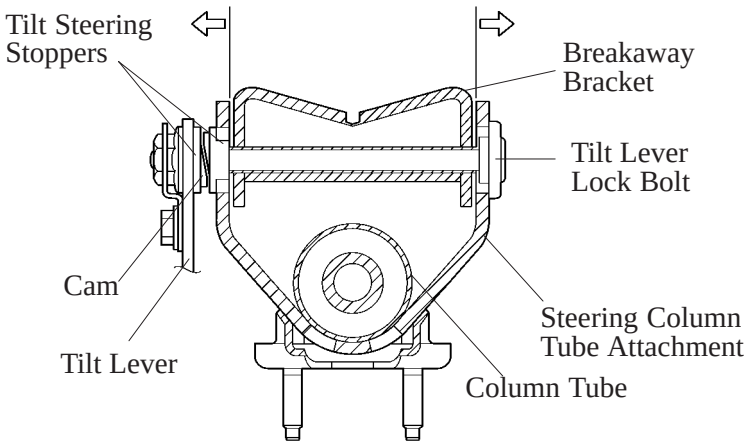

Free
181CH62

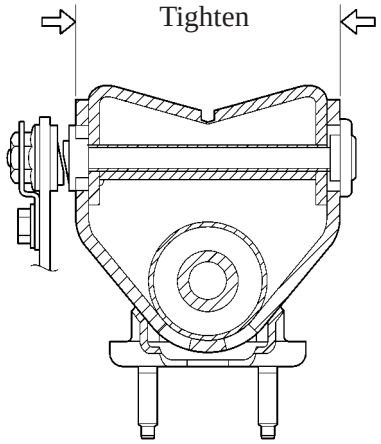

Lock
181CH63

■ENERGY ABSORBING MECHANISM

The energy absorbing mechanism mainly consists of a lower bracket, energy absorbing plate, breakaway bracket and contractil intermediate shaft.
When an impact is transmitted to the steering wheel in a frontal collision (secondary collision), the lower bracket and the bracket spacer, as well as the breakaway bracket and the tilt lever lock bolt separate, causing the entire steering column to move forward.
At the same time, the energy absorbing plate in the lower bracket is deformed by the bracket spacer and help absorbs the impact of the secondary collision.
Furthermore, the amount of forward movement of the entire steering column is absorbed by the contraction of the intermediate shaft.
The contraction of the intermediate shaft also help absorbs the impact (primary collision) causing the steering gear box pressed toward the cabin side and the steering column rearward.

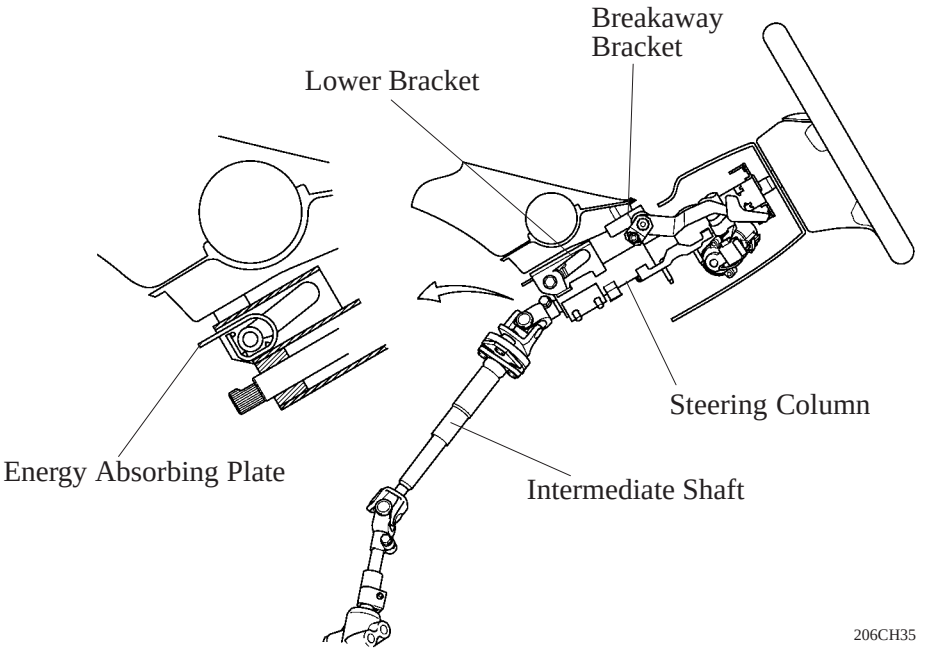

Before Collision

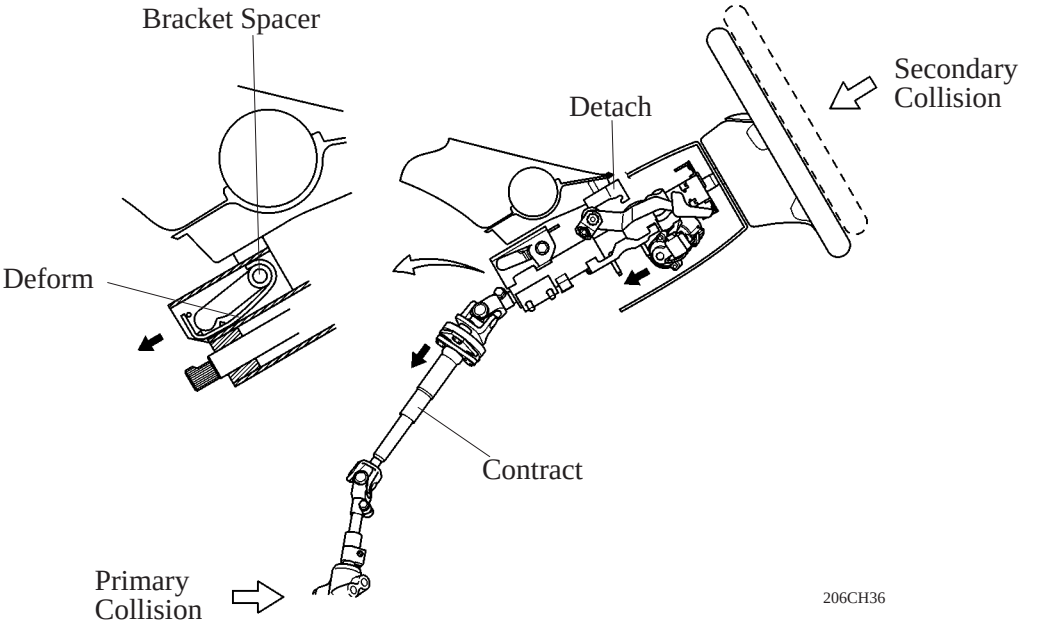

After Collision

ENGINE

1AZ-FE ENGINE

■ DESCRIPTION

- The 1AZ-FE engine, which is an in-line, 4-cylinder, 2.0-liter, 16-valve DOHC engine, base on the 1AZ-FE engine on the current RAV4.
- This engine has adopted the VVT-i (Variable Valve Timing-intelligent) system and big bore / long port intake manifold. It has been developed to realize high performance, quietness, fuel economy and clean emissions.
- The PS (Planetary reduction-Segment conductor motor) starter has been newly adopted on the automatic transaxle model.
- This engine meets the European STEP III regulation requirements.

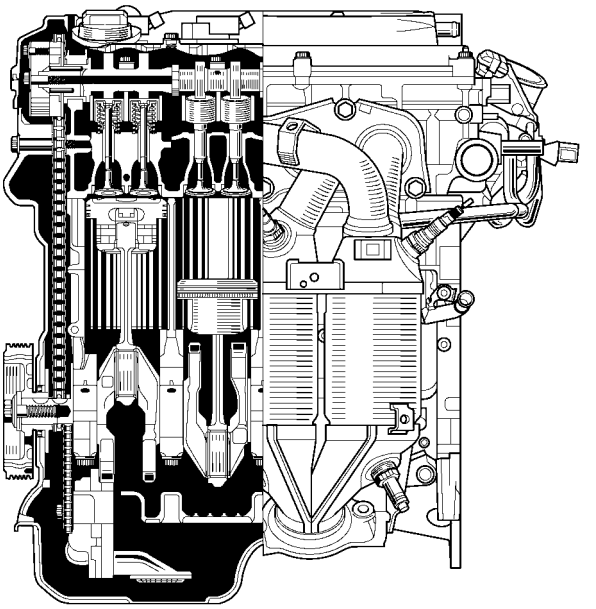

206EG01

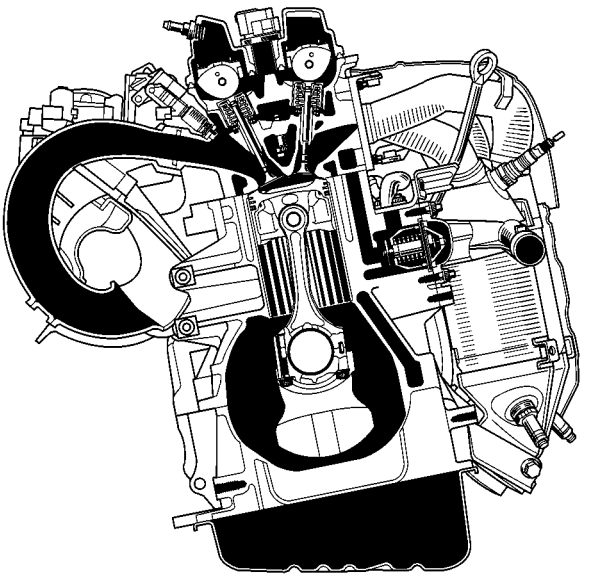

206EG02

▶ Engine Specification ◀

Model		Avensis Verso/Picnic	RAV4
Engine Type		1AZ-FE	←
No. of Cyls. & Arrangement		4-Cylinder, In-line	←
Valve Mechanism		16-Valve, DOHC, Chain Drive	←
Combustion Chamber		Pentroof Type	←
Manifolds		Cross-Flow	←
Fuel System		EFI	←
Displacement	(cu. in.)	1998 (121.9)	←
Bore × Stroke	mm (in.)	86.0 × 86.0 (3.39 × 3.39)	←
Compression Ratio		9.8 : 1	←
Max. Output	[EEC]	110 kW @ 6000 rpm	←
Max. Torque	[EEC]	192 N·m @ 4000 rpm	←
Research Octane Number	Australia	91 or More	←
	Other	95 or More	←
Dry Weight		Approx. 122 kg (Approx. 269 lb)	←
Oil Grade		API SJ, EC or ILSAC	←

EG

▶ Performance Curve ◀

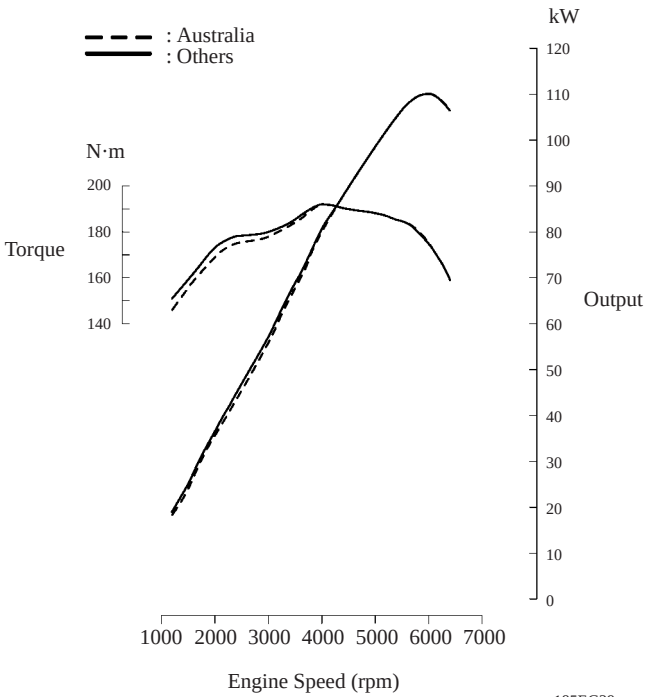

185EG39

▶ Valve Timing ◀

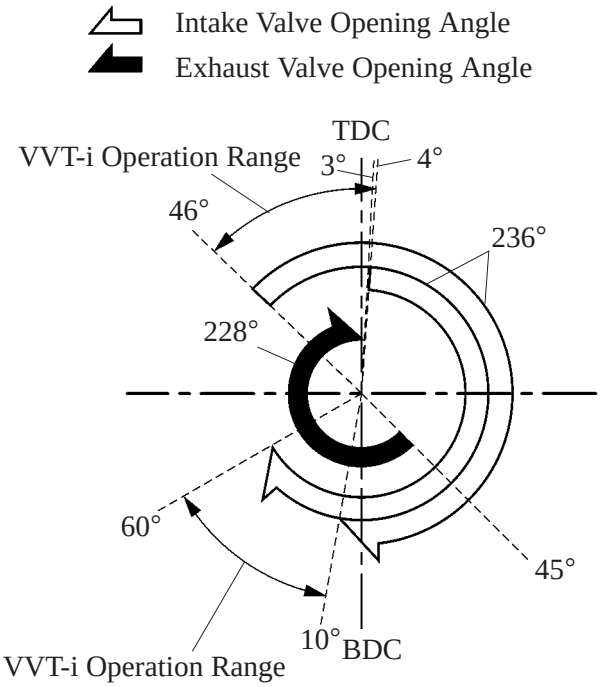

206EG03

■FEATURES OF 1AZ-FE ENGINE

The 1AZ–FE engine has been able to achieve the following performance through the adoption of the items listed below.

(1) High performance and fuel economy

(2) Lightweight and compact design

(3) Good serviceability

(4) Clean emission

Item	(1)	(2)	(3)	(4)	Avensis Verso /Picnic	RAV4
The VVT-i system is used.	○			○	○	○
A cylinder block made of aluminum alloy along with a magnesium head cover has been adopted.		○			○	○
The taper squish shape has been adopted for the piston head, increasing combustion efficiency.	○			○	○	○
The DIS (Direct Ignition System) makes ignition timing adjustment unnecessary.	○		○	○	○	○
A serpentine belt drive system has been adopted.		○	○		○	○
Timing chain has been used.		○	○		○	○
The fuel returnless system has been adopted.		○	○	○	○	○
Quick connectors are used to connect the fuel hose with the fuel pipe.			○		○	○
12-hole type fuel injectors with high atomizing performance have been adopted.	○			○	○	○
Iridium-tipped spark plugs have been adopted.	○		○		○	○
Intake manifold made of plastic has been adopted.		○			○	○
A dual type exhaust manifold has been adopted.	○				○	○
A thin-wall ceramic TWC (Three-Way Catalytic Converter) has been adopted.				○	○	○
The use of an air fuel ratio sensor allows for precise control.				○	○	○
The PS (Planetary reducution-Segment conductor motor) starter has been adopted on automatic transaxle model.		○			○	—

■ENGINE PROPER

1. Cylinder Head Cover

- A lightweight magnesium alloy diecast cylinder head cover is used.
- The cylinder head cover gasket and the spark plug gasket have been integrated to reduce the number of parts.
- Acrylic rubber, which excels in heat resistance and reliability, has been adopted for the cylinder head cover gasket.

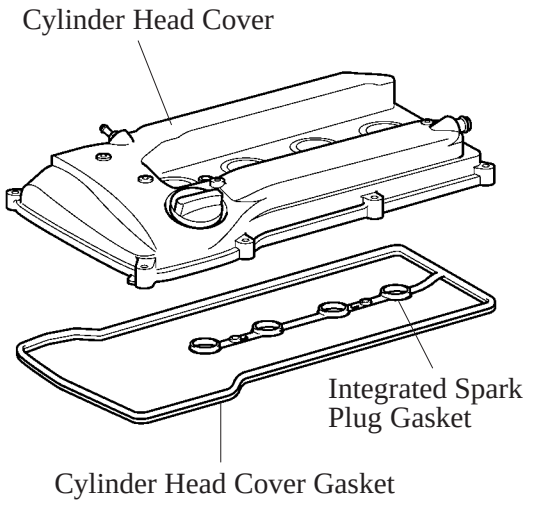

185EG35

2. Cylinder Head Gasket

A steel-laminate type cylinder head gasket has been adopted.
A shim has been added around the cylinder bore to increase the sealing surface, thus improving the sealing performance and durability.

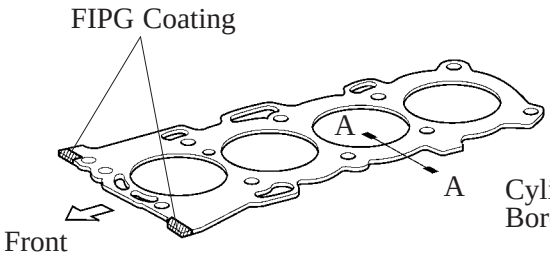

181EG04

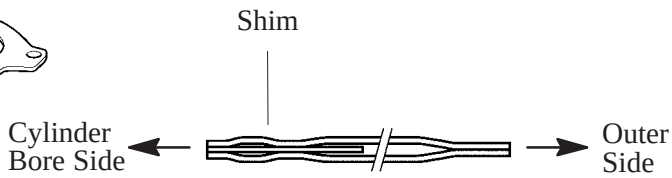

A – A Cross Section

178EG40

Service Tip

Please coat the contact points on the front of the gasket (cylinder head, cylinder block and chain cover) with FIPG at the time that the gasket is installed.

3. Cylinder Head

- Through the adoption of the taper squish combustion chamber, the engine's knocking resistance and fuel efficiency have been improved.
- An upright intake port has been adopted to improve the intake efficiency.
- Installing the injectors in the cylinder head enables the injectors inject fuel as close as possible to the combustion chamber. This prevents the fuel from adhering to the intake port walls, which reduces HC exhaust emissions.
- The routing of the water jacket in the cylinder head has been optimized to improve the cooling performance. In addition, a water bypass passage has been provided below the exhaust ports to reduce the number of parts and to achieve weight reduction.

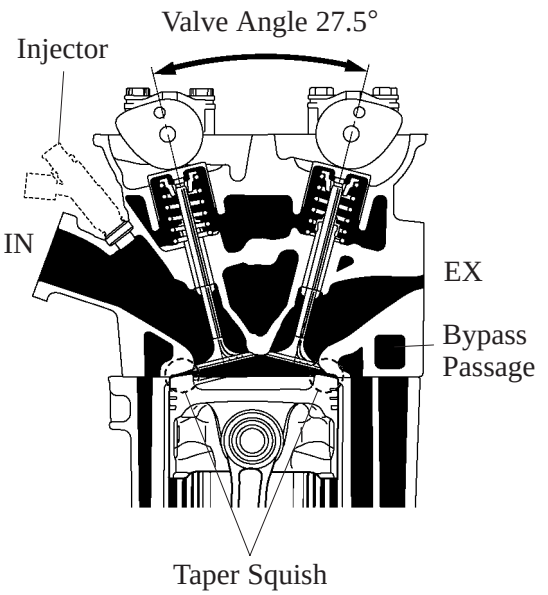

A – A Cross Section 206EG04

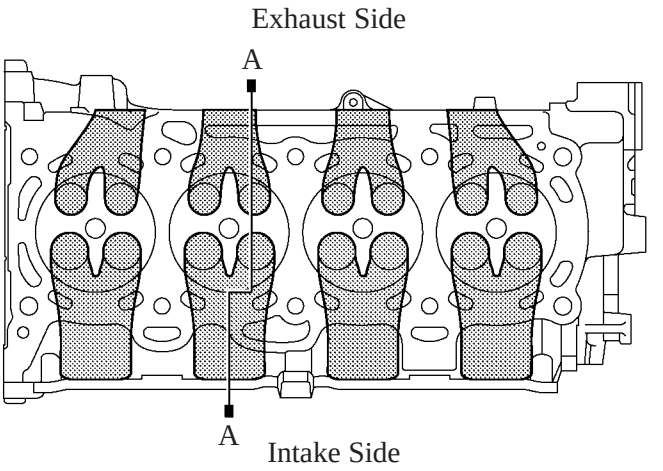

View From The Back Side 198EG29

4. Cylinder Block

- Lightweight aluminum alloy is used for the cylinder block.
- By producing the thin cast-iron liners and cylinder block as a unit, compaction is realized.
- Passage holes are provided in the crankshaft bearing area of the cylinder block. As a result, the air at the bottom of the cylinder flows smoother, and pumping loss (back pressure at the bottom of the piston generated by the piston's reciprocal movement) is reduced to improve the engine's output.
- The oil filter and the air conditioner compressor bracket are integrated the crankcase, also the water pump swirl chamber, and the thermostat housing integrated the cylinder block to reduce the number of parts.

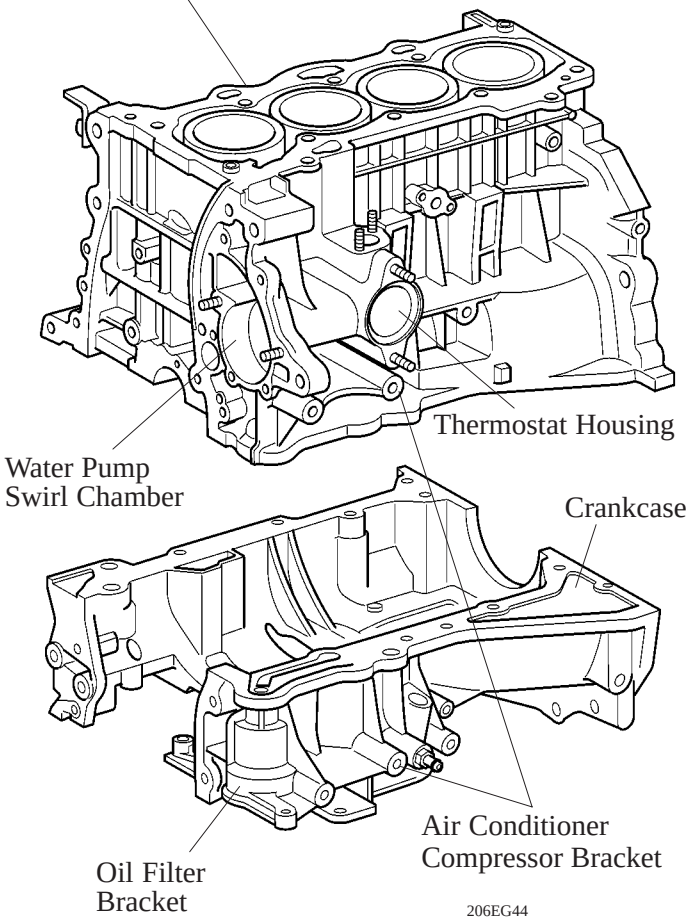

▶ Air Flow During Engine Revolution ◀

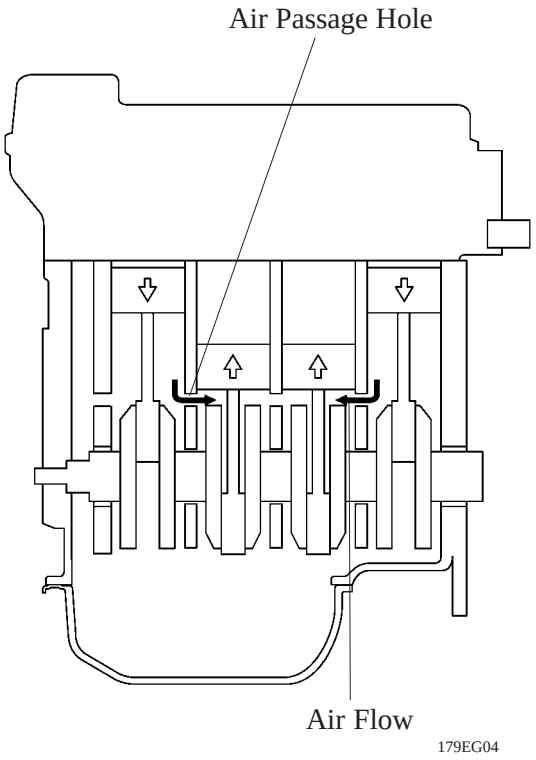

5. Piston

- The piston is made of aluminum alloy and skirt area is made compact and lightweight.
- The piston head portion has adopted a taper squish shape to improve the fuel combustion efficiency.
- The piston skirt has been coated with resin to reduce the friction loss.
- Full floating type piston pins are used.
- By increasing the machining precision of the cylinder bore diameter, the outer diameter of the piston has been made into one type.

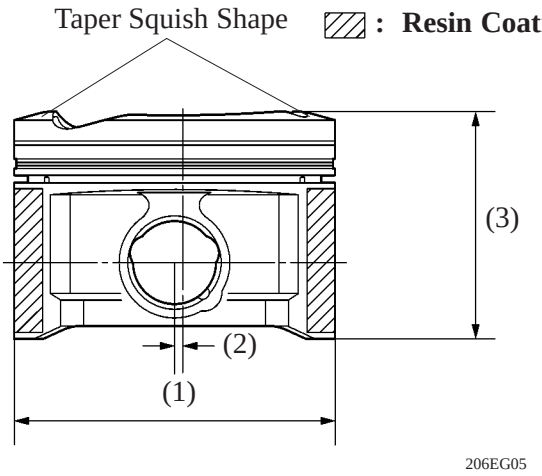

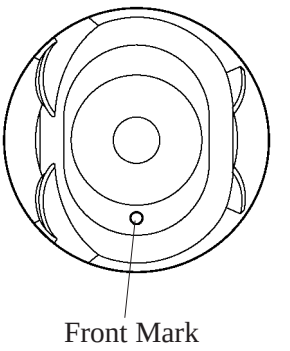

View From The Top Side

▶ Specification ◀

Piston	(1) Basic Diameter	mm (in.)	8.5932 (3.38)
	(2) Piston Pin Offset	mm (in.)	0.5 (0.02)
	(3) Height	mm (in.)	60.9 (2.40)
	Material		Aluminum Alloy
Piston Pin	Diameter × Length	mm (in.)	22.0 × 56.0 (0.87 × 2.20)
	Material		Chrominum Steel

6. Connecting Rod

- The connecting rods and caps are made of high-strength material for weight reduction.
- Nutless-type plastic region tightening bolts of the connecting rod are adopted for a lighter design.
- The connecting rod bearings have been reduced in width to reduce friction.

▶ Specification ◀

(1)	Big End Inside Diameter mm (in.)	51.0 (2.01)
(2)	Small End Inside Diameter mm (in.)	22.0 (0.87)
(3)	Center distance between big and small ends mm (in.)	149.5 (5.89)

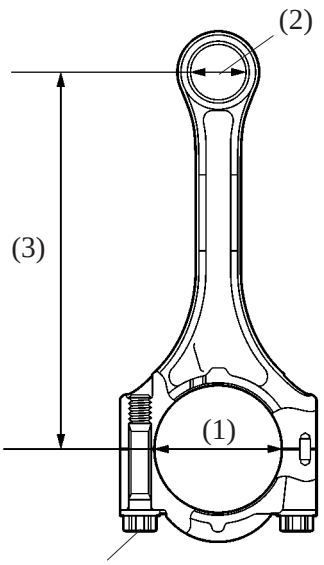

206EG07

EG

7. Crankshaft

- The forged crankshaft has 5 journals and 8 balance weights.
- The crankshaft bearings have been reduced in width to reduce friction.
- The precision and surface roughness of the pins and journals have been improved to reduce friction.

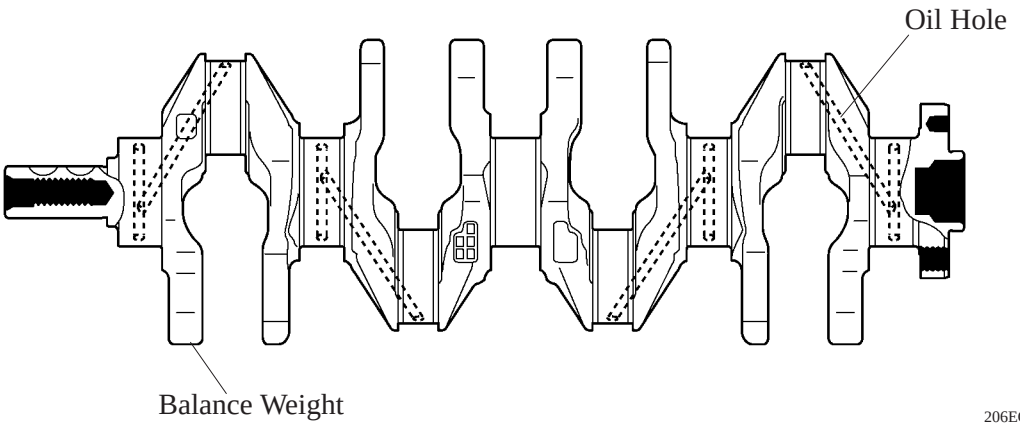

206EG08

■VALVE MECHANISM

1. General

- Each cylinder is equipped with 2 intake valves and 2 exhaust valves. Intake and exhaust efficiency has been increased due to the larger total port areas.
- The valves are directly opened and closed by 2 camshafts.
- The intake and exhaust camshafts are driven by a chain.
  The VVT-i system is used to improve fuel economy, engine performance and reduce exhaust emissions.
  For details, see page EG-30 in the VVT-i system section.
- The shimless type valve lifter is used.

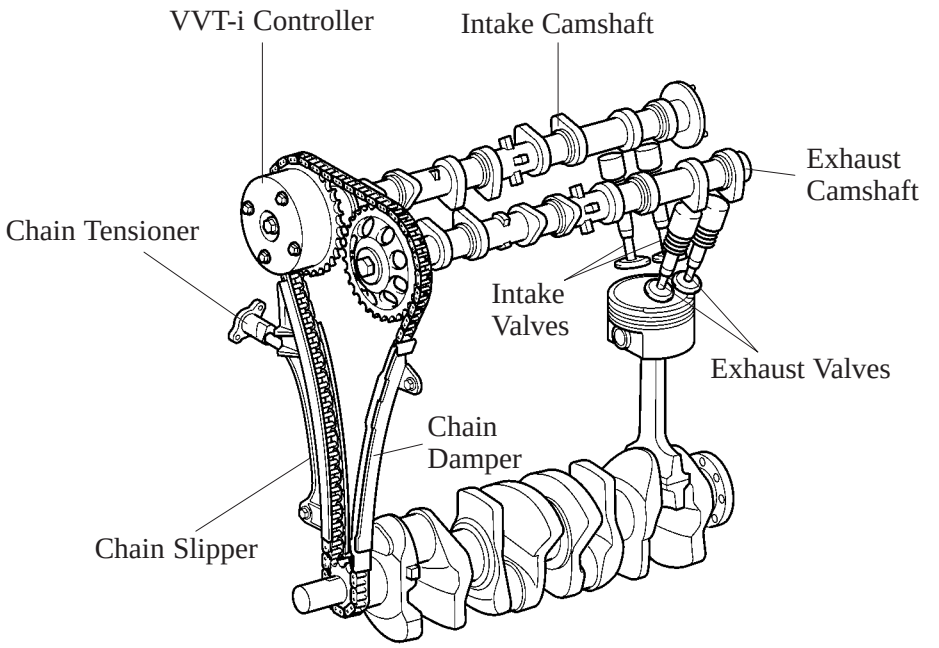

185EG24

2. Camshaft

- The intake camshaft is provided with timing rotor to trigger the camshaft position sensor.
- In conjunction with the adoption of the VVT-i system, an oil passage is provided in the intake camshaft in order to supply engine oil pressure to the VVT-i system.
- A VVT-i controller has been installed on the front of the intake camshaft to vary the timing of the intake valves.

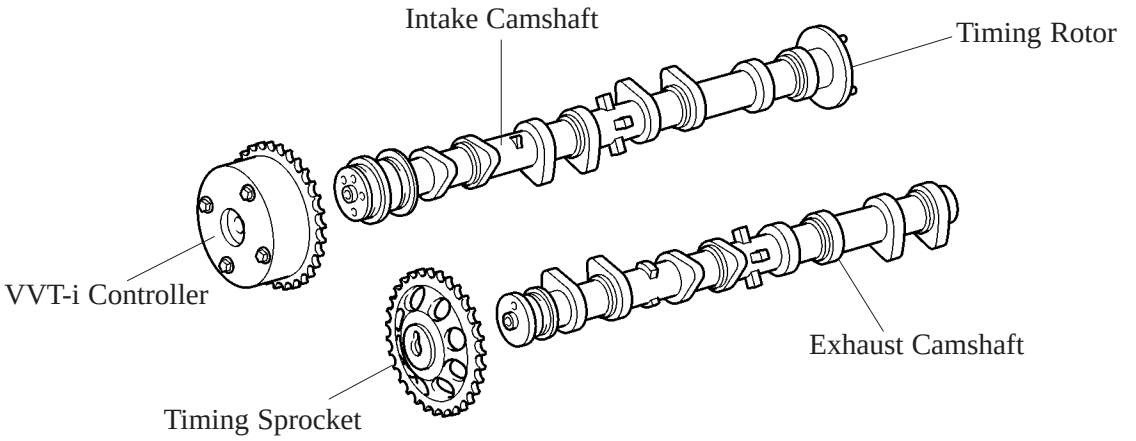

181EG11

3. Intake and Exhaust Valves

- Intake and exhaust valves with large-diameter valve face have been adopted to improve the intake and exhaust efficiency.
- Narrow valve stems have been adopted to reduce the intake and exhaust resistance and for weight reduction.

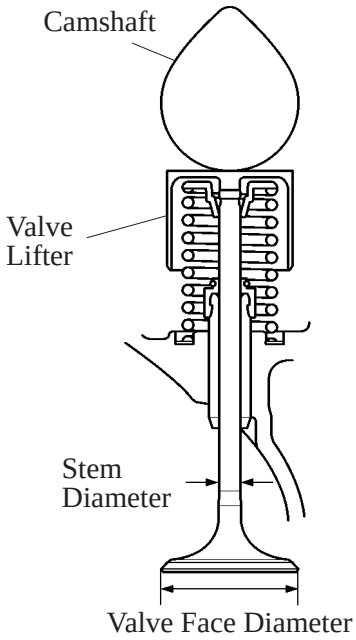

▶ Specification ◀

Valve	Intake	Exhaust
Valve Lift	9.2 mm (0.36 in.)	8.6 mm (0.34 in.)
Valve Face Diameter	34.0 mm (1.34 in.)	29.5 mm (1.16 in.)
Stem Diameter	5.5 mm (0.216 in.)	←

- Along with the increased amount of valve lift, shimless valve lifters that provide a larger cam contact surface have been adopted.
  The adjustment of the valve clearance is accomplished by selecting and replacing the appropriate valve lifters.

Service Tip

A total of 35 valve lifters are available in 0.020 mm (0.008 in.) increments, from 5.060 mm (0.199 in.) to 5.740 mm (0.226 in.). For details, refer to see the 1AZ-FE Engine Repair Manual (RM865E).

4. Timing Chain

- A roller chain with an 8 mm pitch has been adopted to make the engine more compact.
- The timing chain is lubricated by an oil jet.

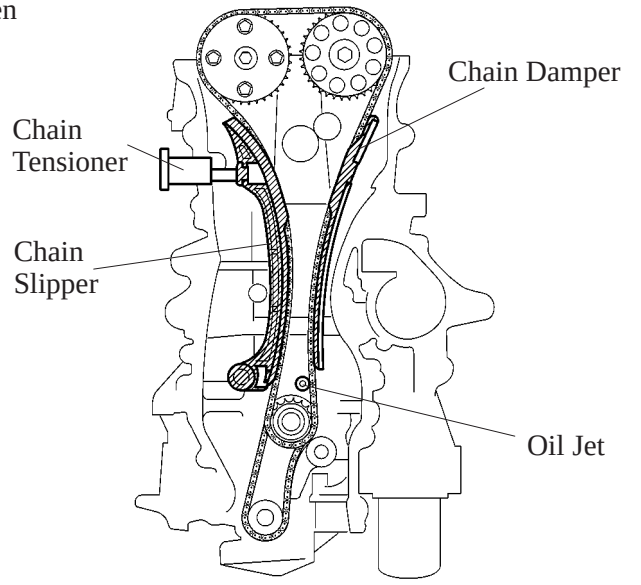

185EG25

5. Chain Tensioner

- The chain tensioner uses a spring and oil pressure to maintain proper chain tension at all times. The chain tensioner suppresses noise generated by the chain.
- A ratchet type non-return mechanism is also used.
- To improve serviceability, the chain tensioner is constructed so that it can be removed and installed from the outside of timing chain cover.

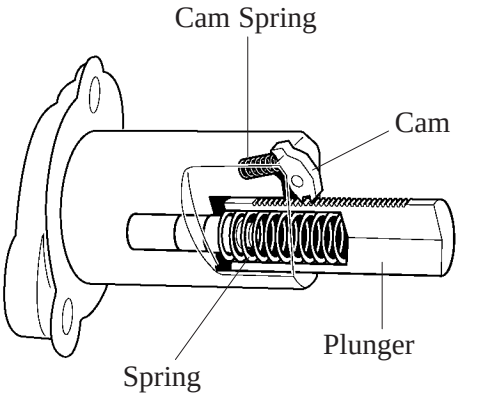

181EG14

■LUBRICATION SYSTEM

1. General

- The lubrication circuit is fully pressurized and oil passes through an oil filter.
- The trochoidal type oil pump is chain-driven by the crankshaft.
- The oil filter is attached downward from the crankcase to improve serviceability.
- Along with the adoption of the VVT-i system, the cylinder head is provided with a VVT-i controller and a camshaft timing oil control valve. This system is operated by the engine oil.

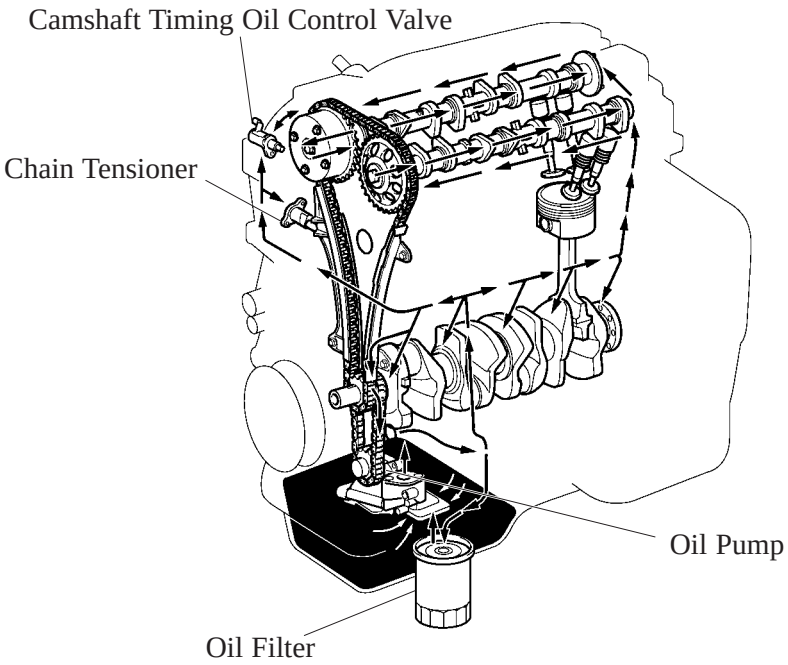

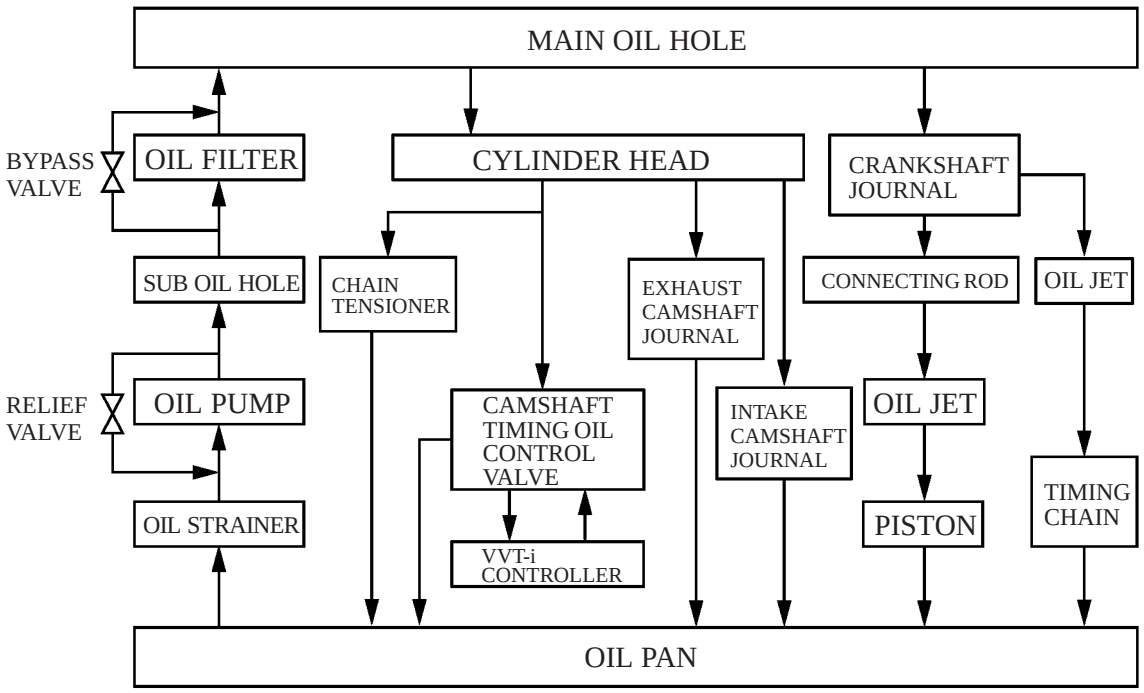

▶ Specification ◀

Oil Capacity	Dry	4.9 liters (5.2 US qts, 4.3 Imp. qts)
	with Oil Filter	4.2 liters (4.4 US qts, 3.7 Imp. qts)
	without Oil Filter	4.0 liters (4.2 US qts, 3.5 Imp. qts)
Oil Pump	Type	Trochoid Gear
	Pump Speed	600 rpm — 6000 rpm
	Discharge Volume	3.4 l/min — 48.1 l/min
	Discharge Pressure	100 kPa (1.0 kgf/cm^2, 14.2 psi) — 290 kPa (3.0 kgf/cm^2, 42.7 psi)
	Relief Valve Opening Pressure	456 kPa (4.6 kgf/cm^2, 65.4 psi)
Oil Filter	Type	Full-flow
	Displacement	75 cm^3 (4.8 cu. in.)
	Bypass Valve Opening Pressure	80 – 120 kPa (0.8 – 1.2 kgf/cm^2)

2. Oil Pump

- The trochoidal type oil pump is chain-driven by the crankshaft, and fits compactly inside the timing chain cover.
- Friction has been reduced by means of 2 relief holes in the internal relief system.

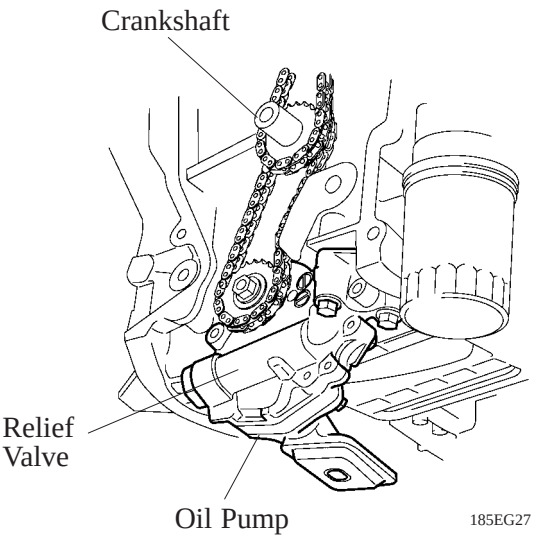

■COOLING SYSTEM

- The cooling system is a pressurized, forced-circulation type.
- A thermostat with a bypass valve is located on the water inlet housing to maintain suitable temperature distribution in the cooling system.
- An aluminum radiator core is used for weight reduction.
- The flow of the engine coolant makes a U-turn in the cylinder block to ensure a smooth flow of the engine coolant. In addition, a bypass passage is enclosed in the cylinder head and the cylinder block.
- Warm water from the engine is sent to the throttle body to prevent freeze-up.
- Along with the adoption of an independent automatic transaxle oil cooler (ATF warmer), a dedicated water passage has been provided.

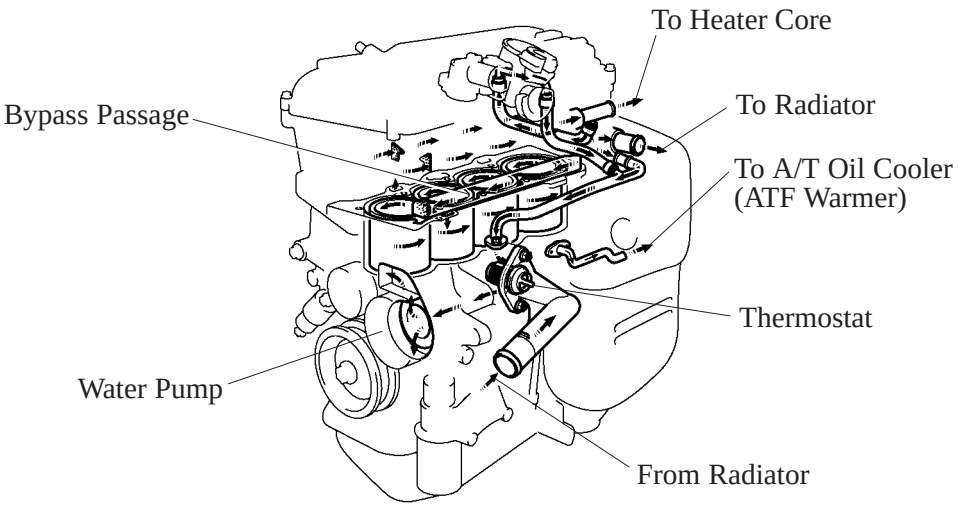

206EG11

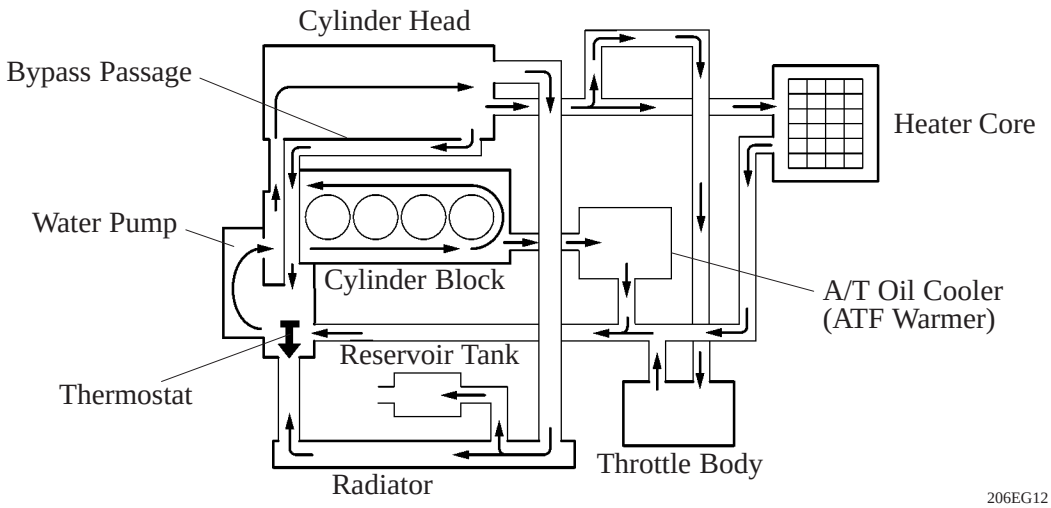

206EG12

■INTAKE AND EXHAUST SYSTEM

1. Air Cleaner

A frameless, full-fabric air cleaner element has been adopted to reduce weight and to simplify its disposal.

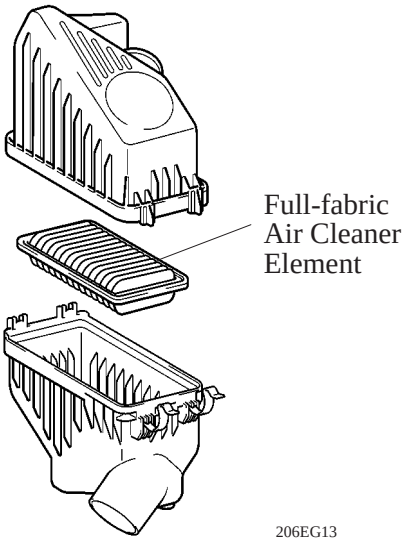

206EG13

2. Throttle Body

- A spherical-plated throttle valve has been adopted on the manual transmission models.
- By adding a spherical curve to the intake air volume, the drivability of the vehicle during the initial phase of the throttle valve opening process has been improved.
- This allows for easy acceleration pedal control and improved acceleration feel.

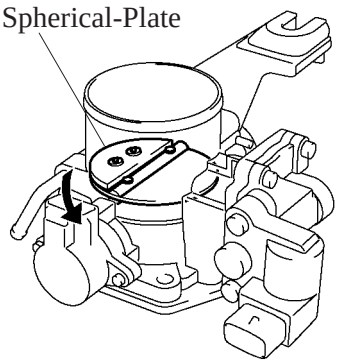

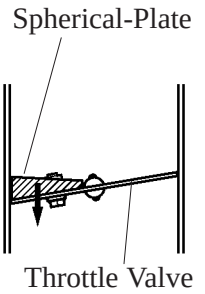

206EG14

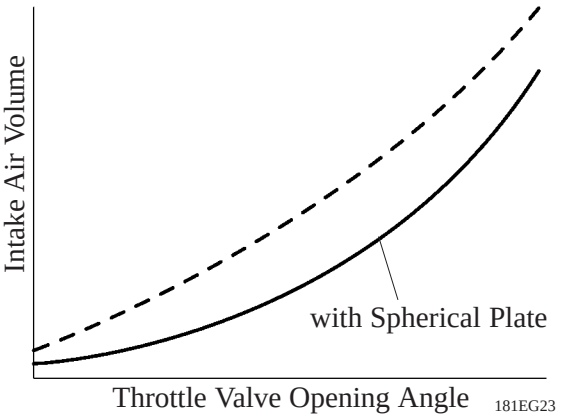

181EG23

3. Intake Manifold

- The intake manifold has been made of plastic to reduce the weight and the amount of heat transferred from the cylinder head. As a result, it has become possible to reduce the intake air temperature and improve the intake volumetric efficiency.
- A resonator is installed inside the air intake chamber which makes use of the intake pulse to improve torque in the mid-speed range.
- Throttle body mesh is used in between the throttle body and the intake manifold to improve the flow of air within the intake manifold.

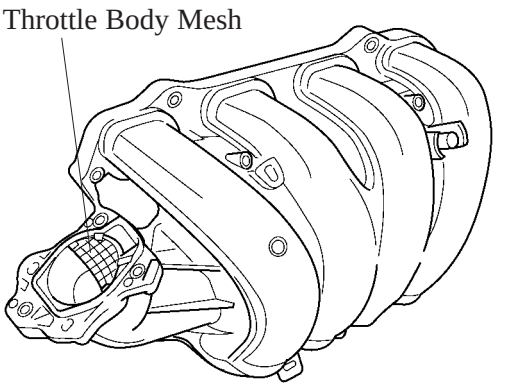

181EG15

4. Exhaust Manifold

- A dual type exhaust manifold has been installed on the front of the vehicle.
- A stainless steel exhaust manifold is used for weight reduction.
- A thin-wall ceramic TWC (Three-Way Catalytic Converter) has been adopted.
- Two air-fuel ratio sensors and two heated oxygen sensors have been provided on the exhaust manifold.

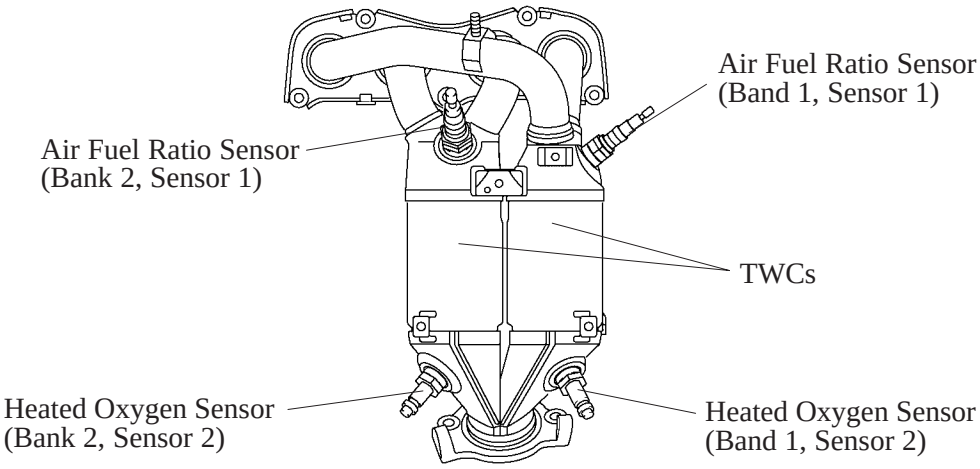

206EG15

5. Three-Way Catalytic Converter

An ultra thin-wall, high-cell density ceramic type TWC has been adopted. This TWC enables to improve exhaust emissions by optimizing the cells density and the wall thickness.

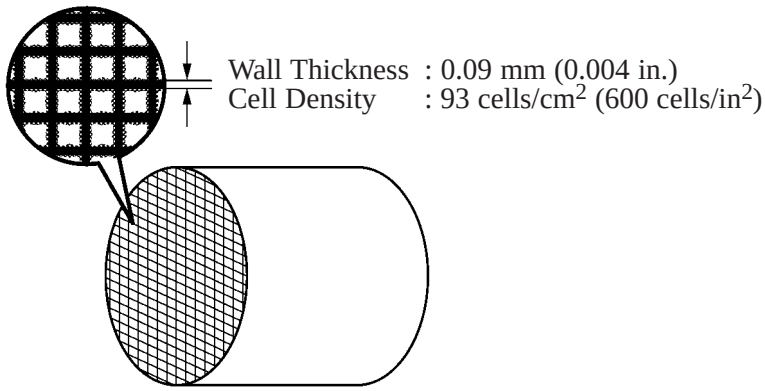

198EG06

■FUEL SYSTEM

1. General

- The fuel returnless system has been adopted to reduce evaporative emissions.
- A fuel cut control has been adopted to stop the fuel pump when the SRS airbag is deployed.
- A quick connector has been adopted to connect the fuel pipe with the fuel hose to improve serviceability.
- A compact fuel pump in which a fuel filter, pressure regulator, and fuel sender gauge are integrated in the fuel pump assembly has been adopted.
- A compact 12-hole type injector with high atomizing performance has been adopted to improve the atomization of fuel.
- The aluminum die-cast delivery pipe has been integrated with the pulsation damper to improve serviceability.
- A tether has been provided on the fuel filler cap to prevent the cap from being lost, which results in preventing the leakage of fuel or the evaporative gas.

2. Fuel Returnless System

This system has been adopted to reduce the evaporative emission. As show below, integrating the fuel filter, pressure regulator, and fuel sender gauge with fuel pump assembly it possible to discontinue the return of fuel from the engine area and prevent temperature rise inside the fuel tank.

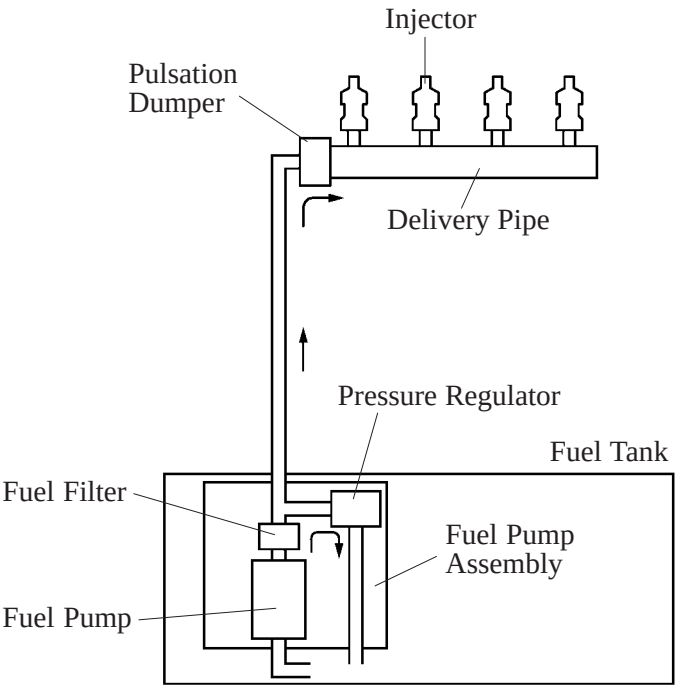

185EG16

3. Fuel Pump Assembly

A compact fuel pump in which a fuel filter, pressure regulator, and fuel sender gauge are integrated in the fuel pump assembly has been adopted.

▶ Specification ◀

Item	Output Pressure (kPa)	Output Volume (L/h)
Output Pressure (Operating Condition)	324	80
Max. Output Pressure	441 ~ 588	—

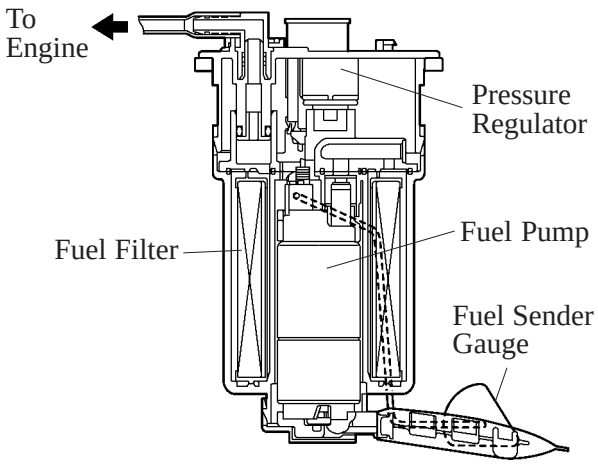

206EG16

4. Fuel Injector

The 12-hole type injector has been adopted to improve the atomization of fuel.

▶ Specification ◀

Quantity of Nozzle Hole	12
Diameter of Nozzle Hole mm (in.)	0.16 (0.006)

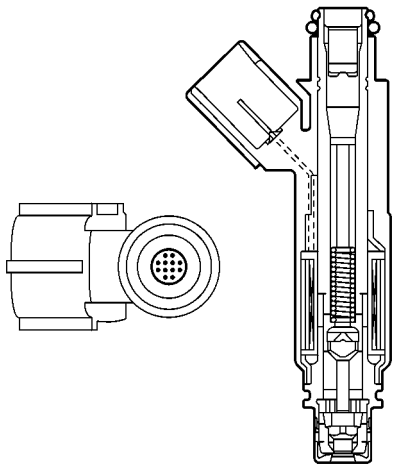

185EG04

■IGNITION SYSTEM

1. General

A DIS (Direct Ignition System) has been adopted. The DIS improves the ignition timing accuracy, reduces high-voltage loss, and enhances the overall reliability of the ignition system by eliminating the distributor. The DIS in this engine is an independent ignition system which has one ignition coil (with igniter) for each cylinder.

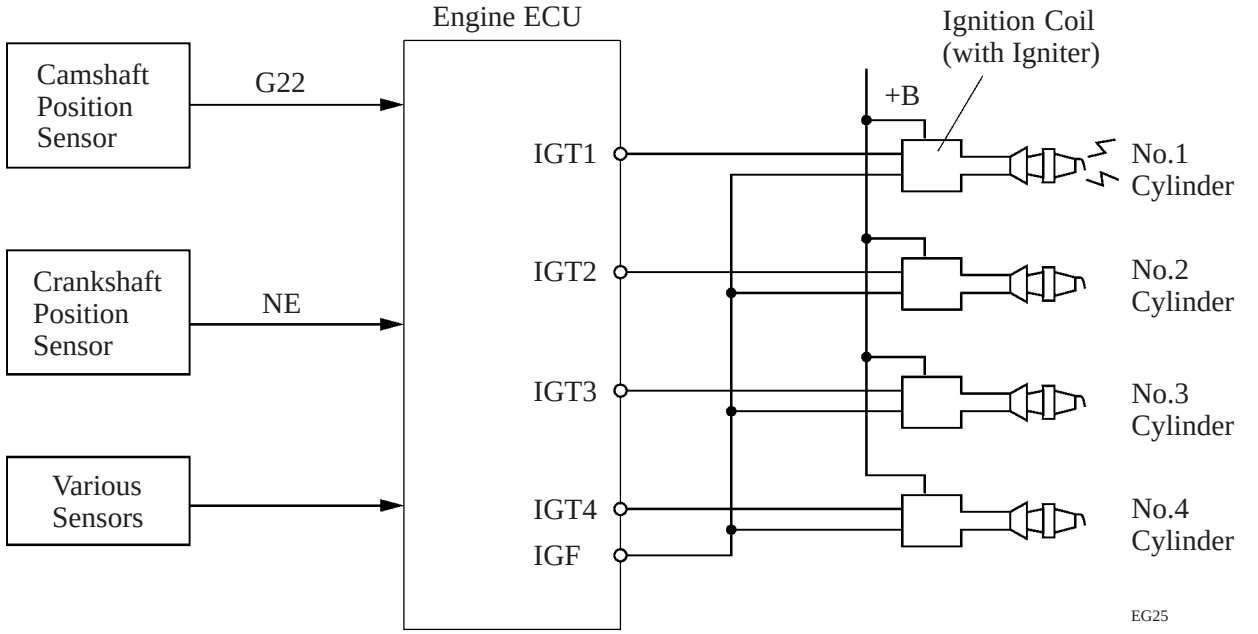

2. Ignition Coil

The DIS provides 4 ignition coils, one for each cylinder. The spark plug caps, which provide contact to the spark plugs, are integrated with an ignition coil. Also, an igniter is enclosed to simplify the system.

3. Spark Plug

Iridium-tipped spark plugs have been adopted to improve ignition performance while maintaining the same durability of the platinum-tipped spark plugs.

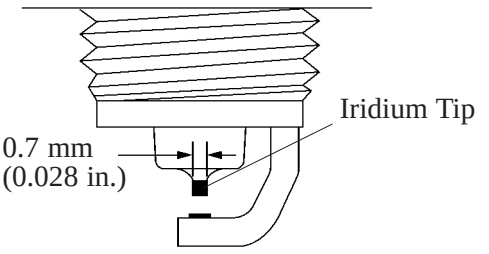

▶ Recommended Spark Plugs ◀

DENSO	SK20R11
NGK	IFR6A11
Plug Gap	1.0 – 1.1 mm (0.039 – 0.043 in.)

■STARTING SYSTEM

Starter

1) General

- The automatic transaxle model has adopted a compact and lightweight PS (Planetary reduction-Segment conductor motor) starter. The manual transaxle model has adopted the conventional starter.
- Because the PS starter contains an armature that uses square-shaped conductors, and its surface functions as a commutator, it has resulted in both improving its output torque and reducing its overall length.
- In place of the field coil used in the conventional starter, the PS starter uses of permanent magnets.

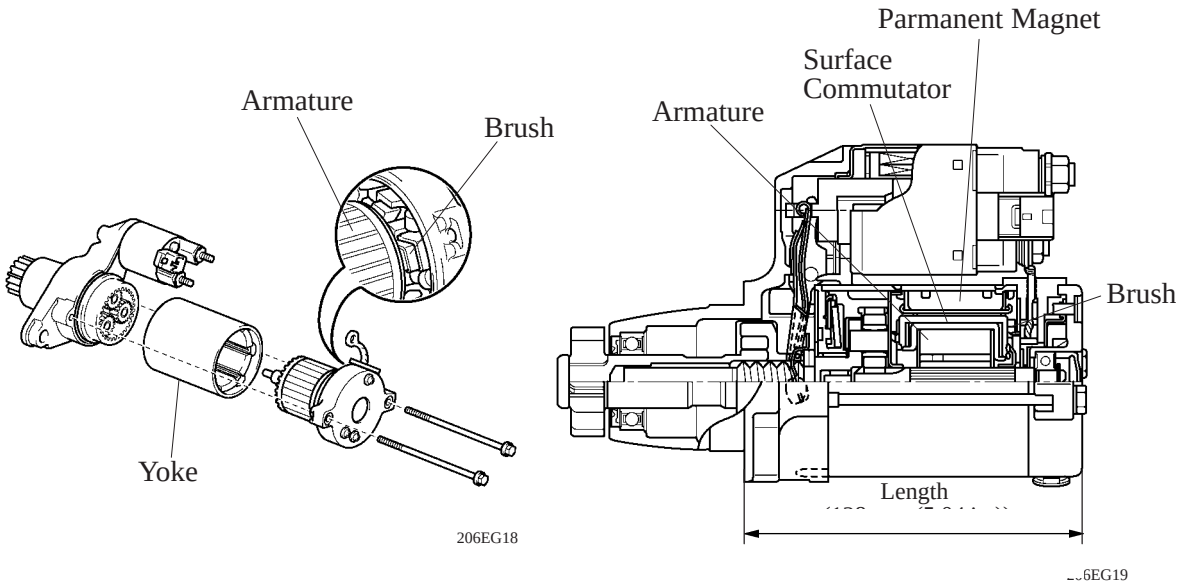

PS Starter

▶ Specification ◀

Model	PS Starter (Automatic Transaxle Model)	Conventional Type Starter (Manual Transaxle Model)
Length	128 mm (5.04 in.)	134 mm (5.28 in.)
Weight	2900 g	3550 g
Rating Voltage	12 V	12 V
Rating Output	1.3 kW	1.2 kW
Rotating of Direction	Counter Clock Wise*	Counter Clock Wise*

*: Viewed from Pinion Side

2) Construction

- Instead of the construction of the armature coil of the conventional starter that uses round-shaped conductor wires, the PS starter uses square conductors. With this type of construction, the same conditions that are realized by winding numerous round-shaped conductor wires can be achieved without increasing the mass. As a result, the output torque has been increased, and the armature coil has been made more compact.
- Because the surface of the square-shaped conductors that are used in the armature coil functions as a commutator, the overall length of the PS starter has been shortened.

Conventional Type Starter

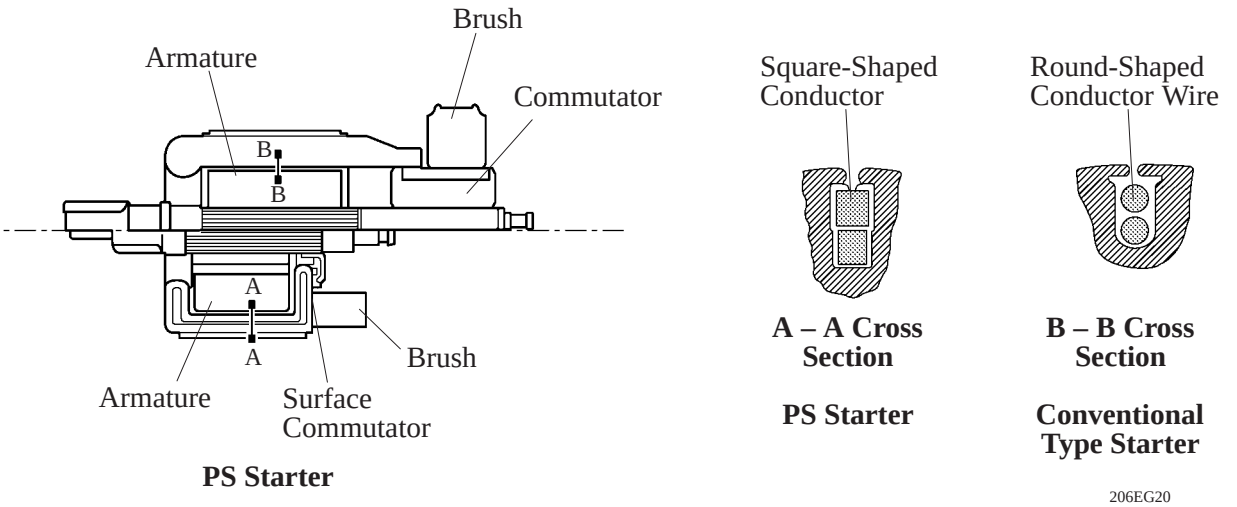

PS Starter

A – A Cross Section

PS Starter

B – B Cross Section

Conventional Type Starter

206EG20

■SERPENTINE BELT DRIVE SYSTEM

- Accessory components are driven by a serpentine belt consisting of a single V-ribbed belt. It reduces the overall engine length, weight and number of engine parts.
- An automatic tensioner eliminates the need for tension adjustment.

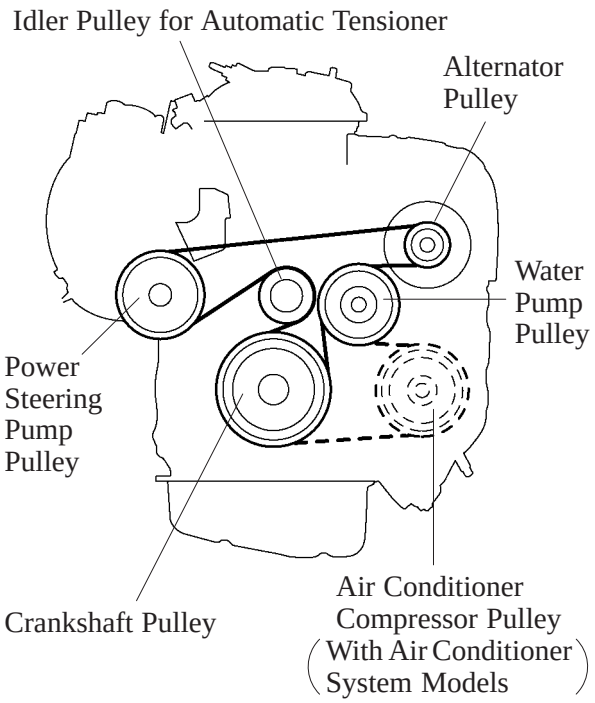

181EG17

■ENGINE CONTROL SYSTEM

1. General

The engine control system of the Avensis Verso/Picnic's 1AZ-FE engine is basically the same in construction and operation as that of the RAV4's 1AZ-FE engine.
The engine control system of the Avensis Verso/Picnic's 1AZ-FE engine and RAV4's 1AZ-FE engine are compared below.

System	Outline	Avensis Verso/ Picnic	RAV4
EFI (Electronic Fuel Injection)	• An L-type EFI system directly detects the intake air volume with a hot-wire type air flow meter. • The fuel injection system is a sequential multiport fuel injection system.	○	○
ESA (Electronic Spark Advance)	Ignition timing is determined by the engine ECU based on signals from various sensors. The engine ECU corrects ignition timing in response to engine knocking.	○	○
ISC (Idle Speed Control)	A rotary solenoid type ISC valve controls the fast idle and idle speeds.	○	○
VVT-i (Variable Valve Timing-intelligent) (See page EG-30)	Controls the intake camshaft to an optimal valve timing in accordance with the engine condition.	○	○
Fuel Pump Control (See page EG-35)	• Fuel pump operation is controlled by signal from the engine ECU. • To stop the fuel pump while the SRS driver's and front passenger's airbags are in operation.	○	○
Air Fuel Ratio Sensor, Oxygen Sensor Heater Control	Maintains the temperature of the air fuel ratio sensor and oxygen sensor at an appropriate level to increase accuracy of detection of the oxygen concentration in the exhaust gas.	○	○
Evaporative Emission Control	The engine ECU controls the purge flow of evaporative emissions (HC) in the charcoal canister in accordance with engine conditions.	○	○
Air Conditioner Cut-off Control*1	By turning the air conditioner compressor ON or OFF in accordance with the engine condition, drivability is maintained.	○	○
Cooling Fan Control (See page EG-36)	Radiator cooling fan operation is controlled by signals from engine ECU based on the water temperature sensor signal (THW) and the condition of the air conditioner operation.	○	—
Engine Immobiliser*2	Prohibits fuel delivery and ignition if an attempt is made to start the engine with an invalid ignition key.	○	○
Diagnosis	When the engine ECU detects a malfunction, the engine ECU diagnoses and memorizes the failed section.	○	○
Fail-Safe	When the engine ECU detects a malfunction, the engine ECU stops or controls the engine according to the data already stored in memory.	○	○

*1: with Air Conditioner System
*2: with Engine Immobiliser System

2. Construction

The configuration of the engine control system in the 1AZ-FE engine in the new Avensis Verso/Picnic is as shown in the following chart.

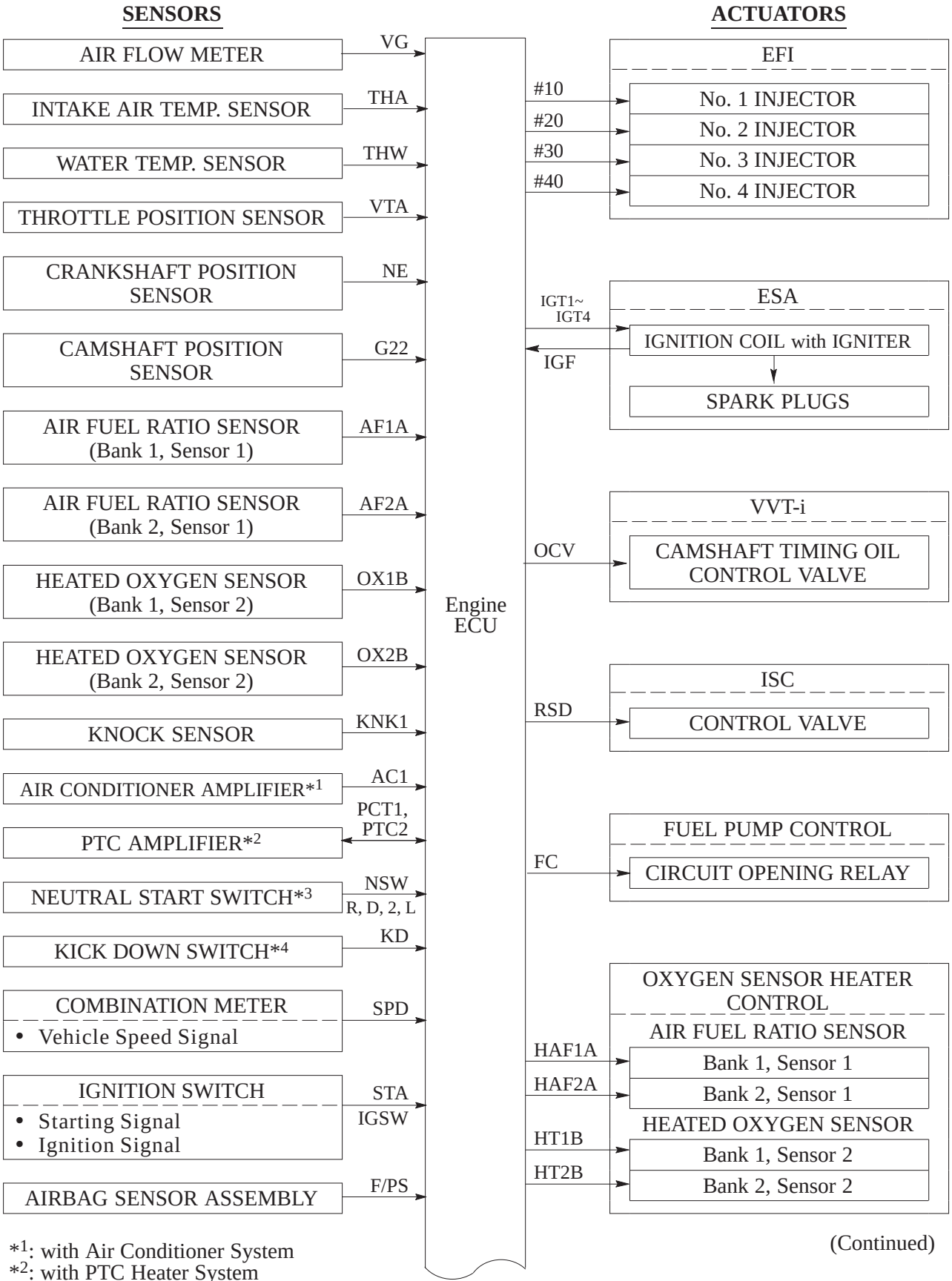

(Continued)

*1: with Air Conditioner System
*2: with PTC Heater System
*3: Only for Automatic Transaxle
*4: LHD models with automatic transaxle for Europe only

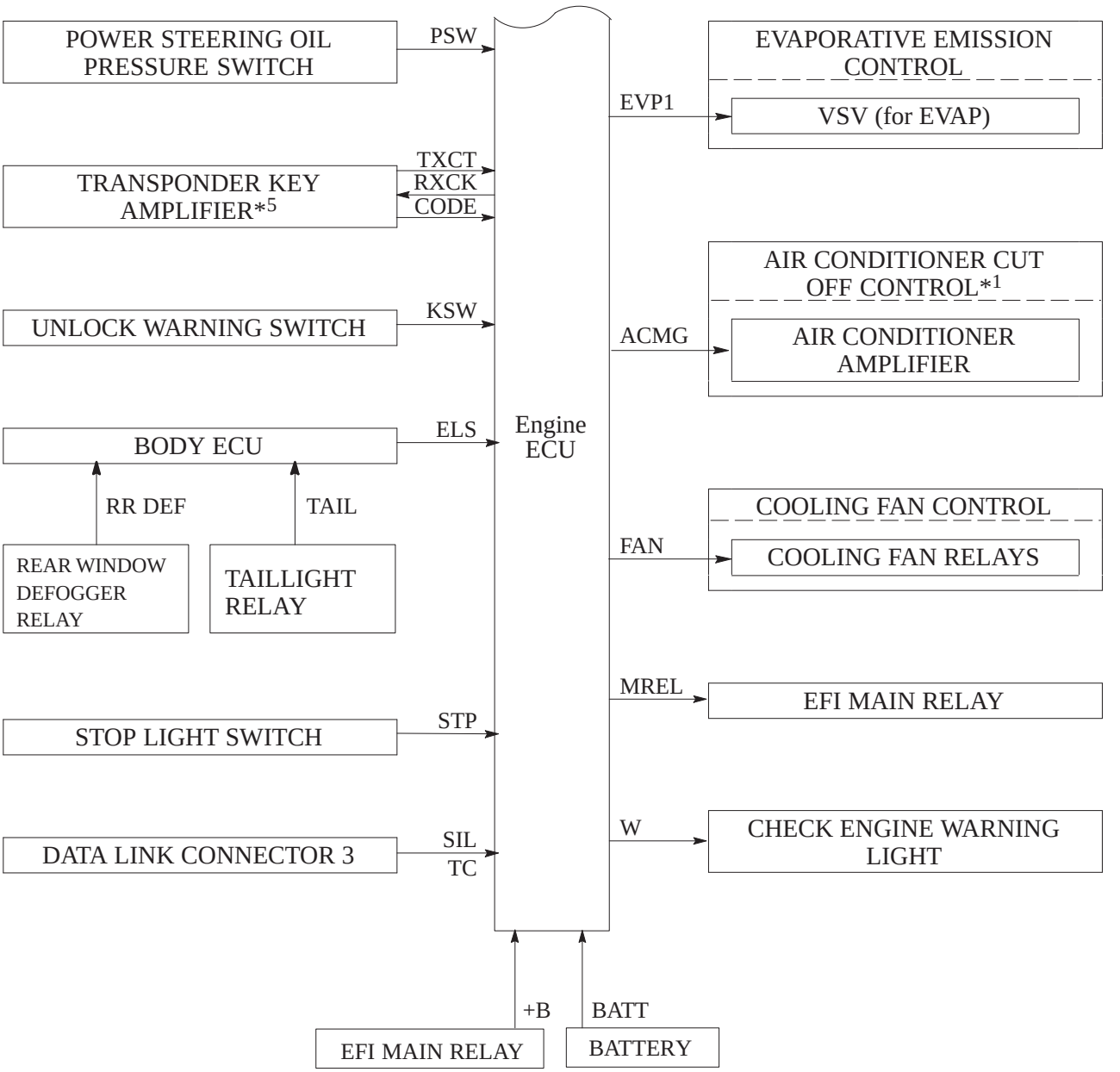

*5: with Engine Immobiliser System

3. Engine Control System Diagram

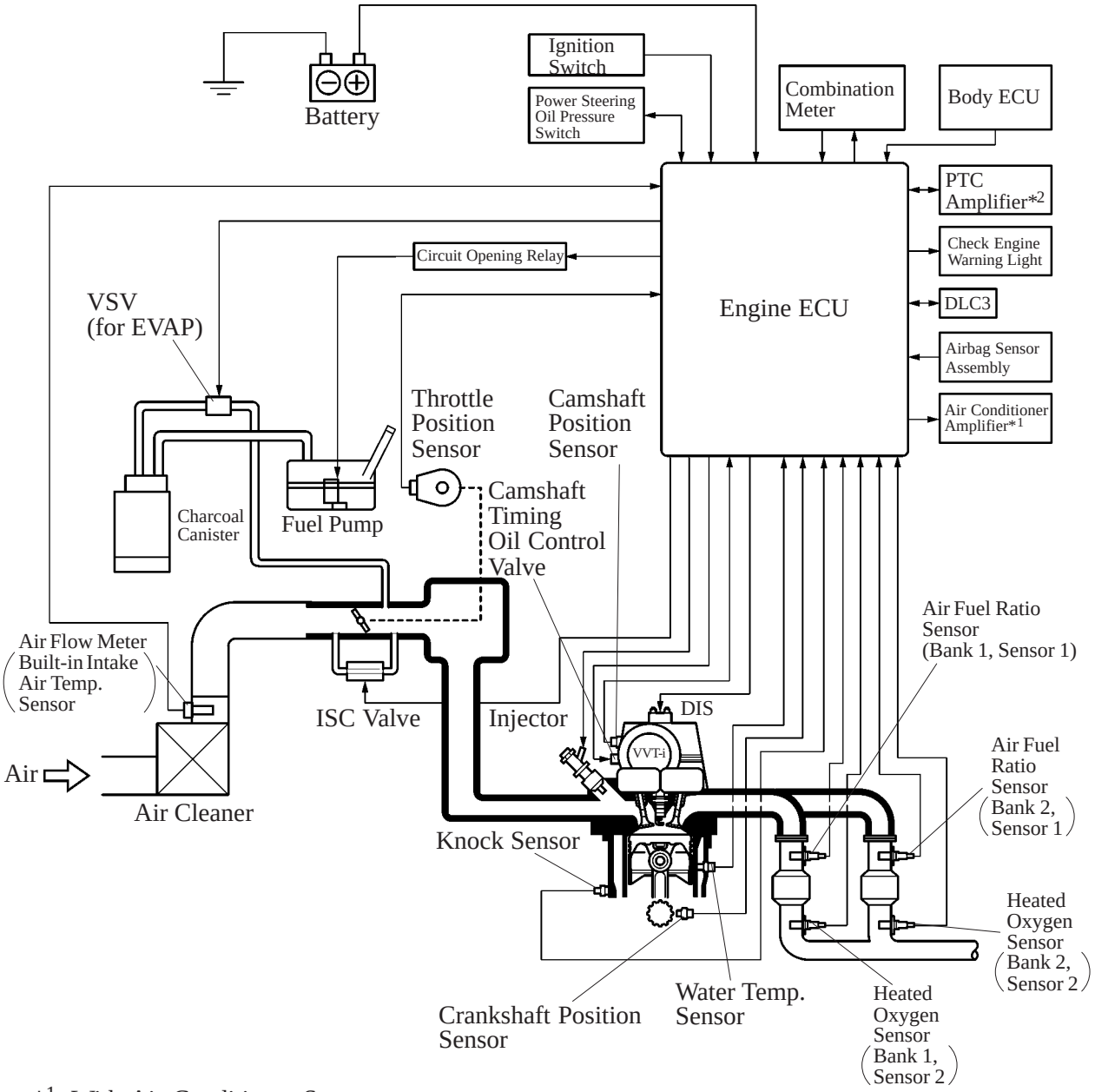

*1: With Air Conditioner System
*2: With PTC Heater System

EG

4. Layout of Main Components

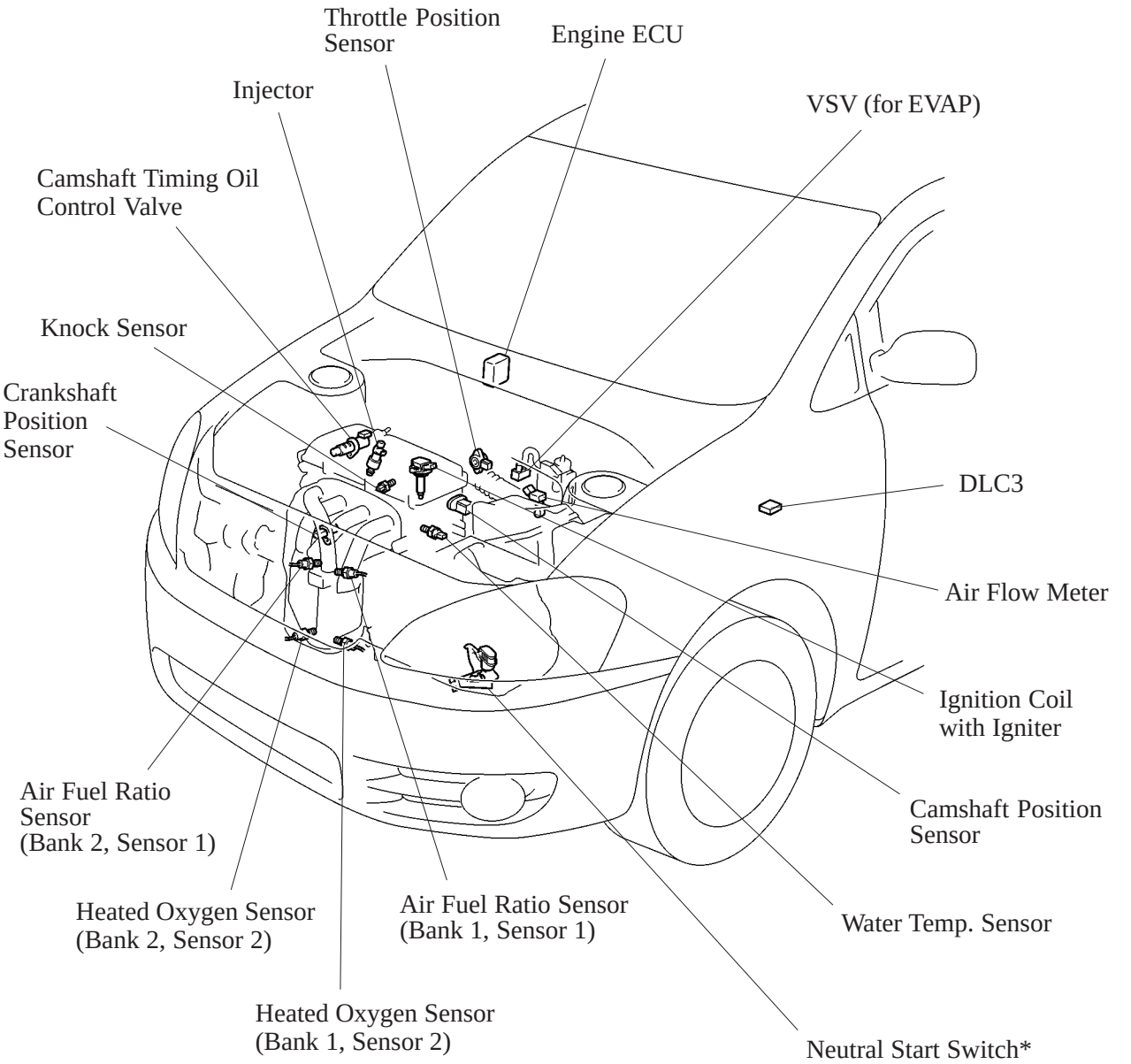

*: Only for Automatic Transaxle

5. Main Components of Engine Control System

General

The main components of the 1AZ-FE engine control system are as follows:

Components	Outline	Quantity
Air Flow Meter	Hot-Wire Type	1
Crankshaft Position Sensor (Rotor Teeth)	Pick-Up Coil Type (36-2)	1
Camshaft Position Sensor (Rotor Teeth)	Pick-Up Coil Type (3)	1
Throttle Position Sensor	Linear Type	1
Knock Sensor	Built-In Piezoelectric Element Type	1
Air Fuel Ratio Sensor (Bank 1, Sensor 1) (Bank 2, Sensor 1)	Type with heater	2
Oxygen Sensor (Bank 1, Sensor 2) (Bank 2, Sensor 2)	Type with heater	2
Injector	12-Hole Type	4
ISC Valve	Rotary Solenoid Type (1-Coil Type)	1

EG

Air Fuel Ratio Sensor

As illustrated below, the conventional oxygen sensor is characterized by a sudden change in its output voltage at the threshold of the stoichiometric air-fuel ratio (14.7 : 1). In contrast, the air-fuel ratio sensor outputs a voltage that is approximately proportionate to the existing air-fuel ratio by converting the oxgen density to the voltage. As a result, the detection precision of the air-fuel ratio has been improved.

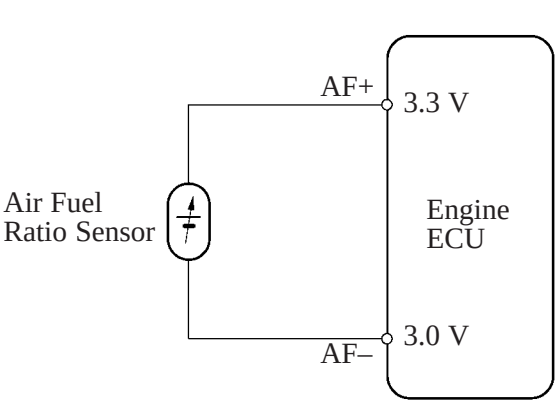

185EG43

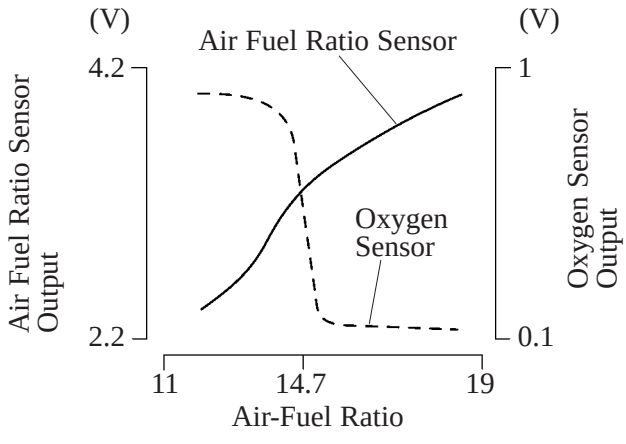

Output Characteristics

185EG44

6. VVT-i (Variable Valve Timing-intelligent) System

General

The VVT-i system is designed to control the intake camshaft within a wide range of 50° (of crankshaft angle) to provide a valve timing that is optimally suited to the engine condition, thus realizing improved torque in all the speed ranges and fuel economy, and reduce exhaust emissions. The actual intake valve timing is feedback by means of the camshaft position sensor for constant control to the target valve timing.

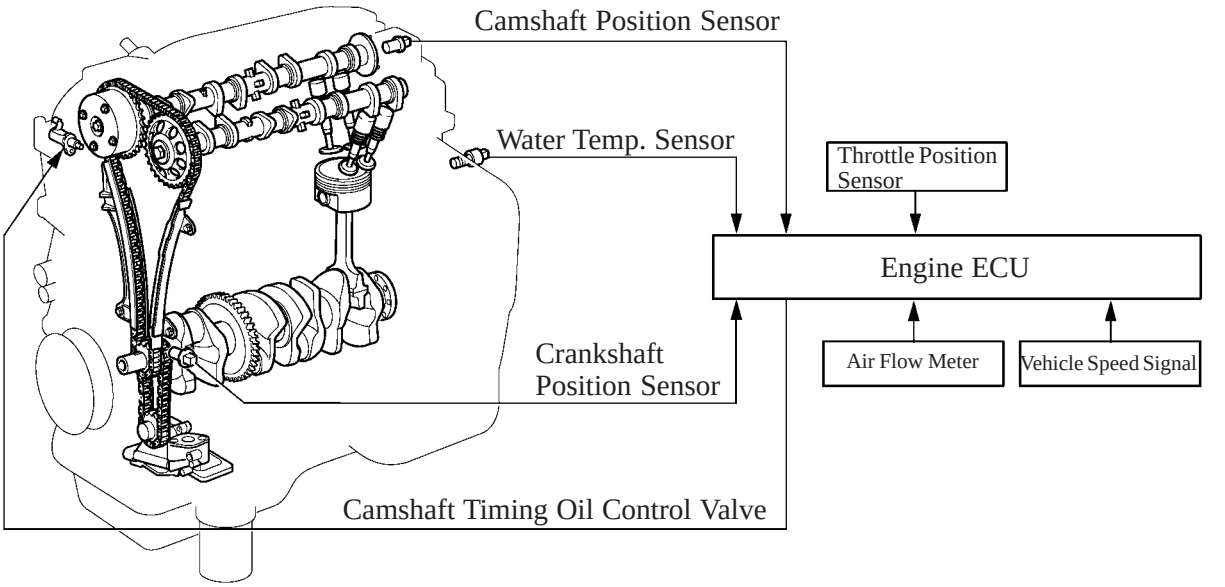

198EG19

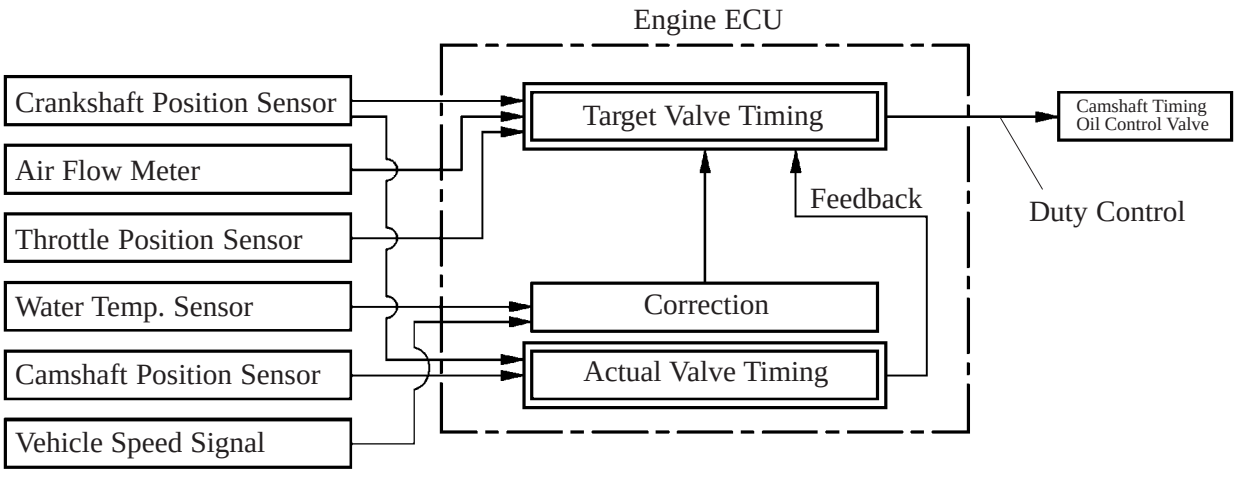

172CR07

Construction

1) VVT-i Controller

This controller consists of the housing driven from the timing chain and the vane coupled with the intake camshaft.
The oil pressure sent from the advance or retard side path at the intake camshaft causes rotation in the VVT-i controller vane circumferential direction to vary the intake valve timing continuously.
When the engine is stopped, the intake camshaft will be in the most retarded state to ensure startability.
When hydraulic pressure is not applied to the VVT-i controller immediately after the engine has been started, the lock pin locks the movement of the VVT-i controller to prevent a knocking noise.

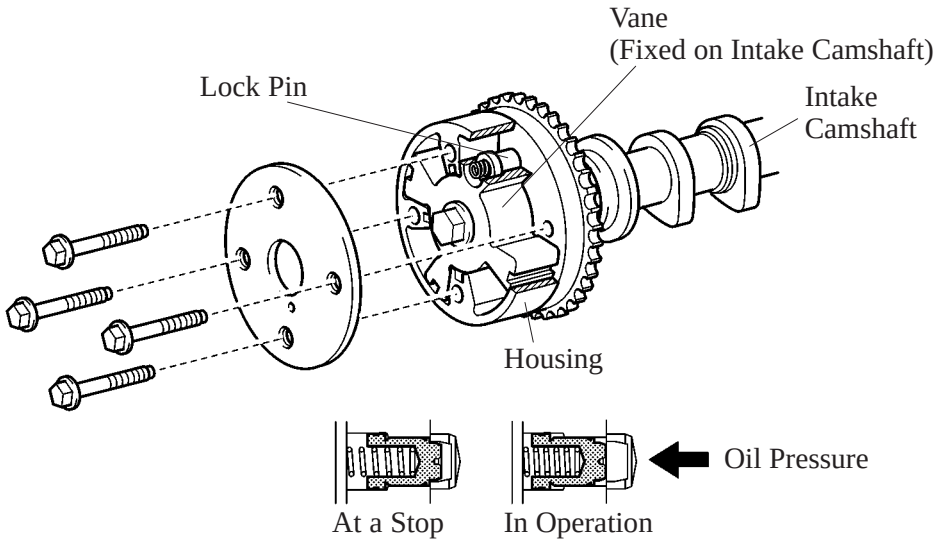

Lock Pin

169EG36

2) Camshaft Timing Oil Control Valve

The camshaft timing oil control valve controls the spool valve position in accordance with the duty control from the engine ECU thus allocating the hydraulic pressure that is applied to the VVT-i controller to the advance and the retard side. When the engine is stopped, the camshaft timing oil control valve is in the most retarded state.

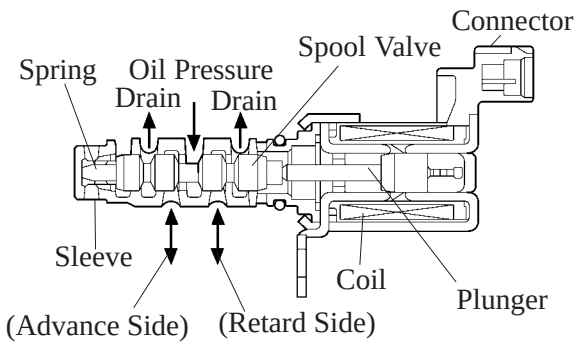

To VVT-i Controller

181EG39

Operation

- The camshaft timing oil control valve selects the oil path to the VVT-i controller according to the advance, retard or hold signal from the engine ECU. The VVT-i controller rotates the intake camshaft in the timing advance or retard position or holds it according to the position where the oil pressure is applied.

1) Advance

When the camshaft timing oil control valve is positioned as illustrated below by the advance signal from the engine ECU, the resultant oil pressure is applied to the timing advance side vane chamber to rotate the camshaft in the timing advance direction.

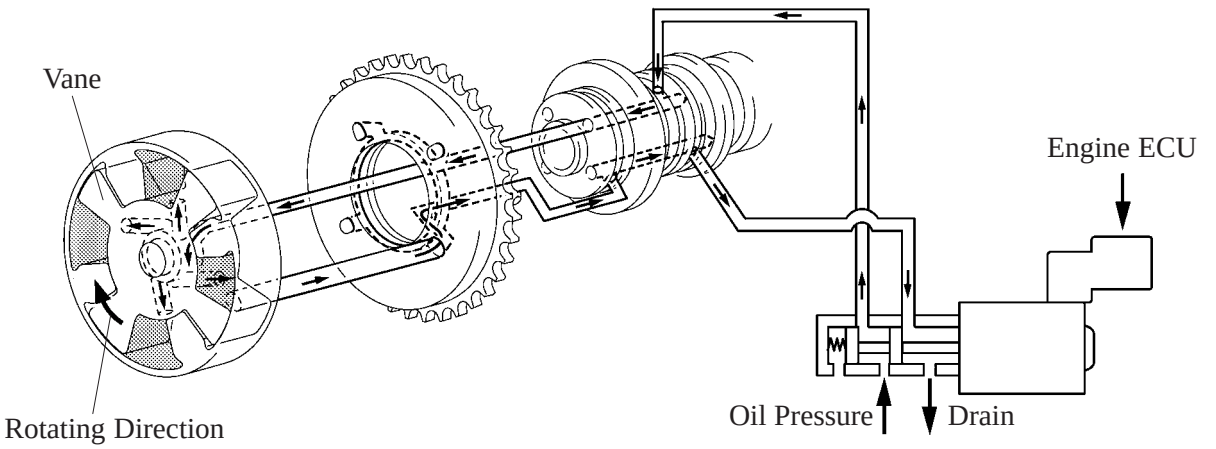

198EG35

2) Retard

When the camshaft timing oil control valve is positioned as illustrated below by the retard signal from the engine ECU, the resultant oil pressure is applied to the timing retard side vane chamber to rotate the camshaft in the timing retard direction.

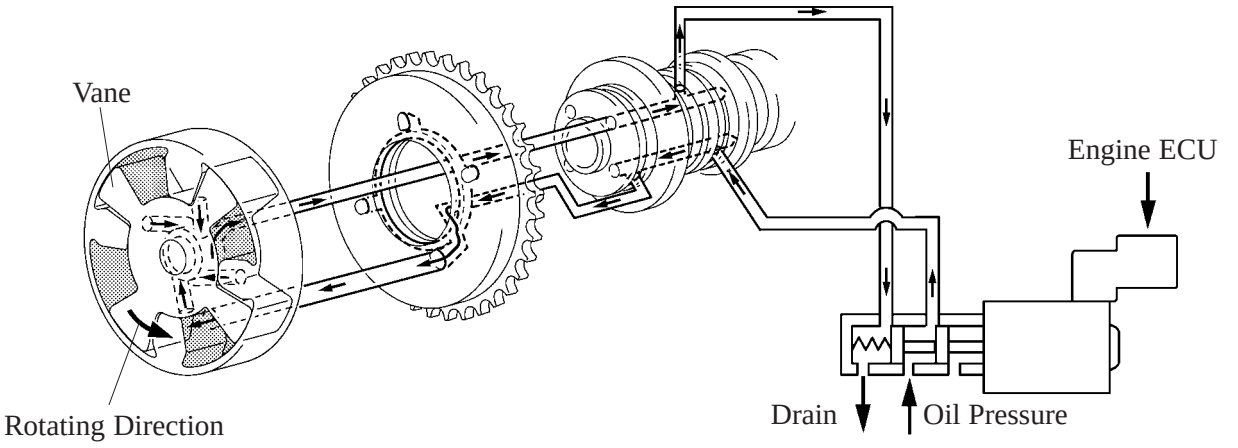

198EG36

3) Hold

The engine ECU calculated the target timing angle according to the traveling state to perform control as described in the previous page. After setting at the target timing, the valve timing is held by keeping the camshaft timing oil control valve in the neutral position unless the traveling state changes.
The adjusts the valve timing at the desired target position and prevents the engine oil from running out when it is unnecessary.

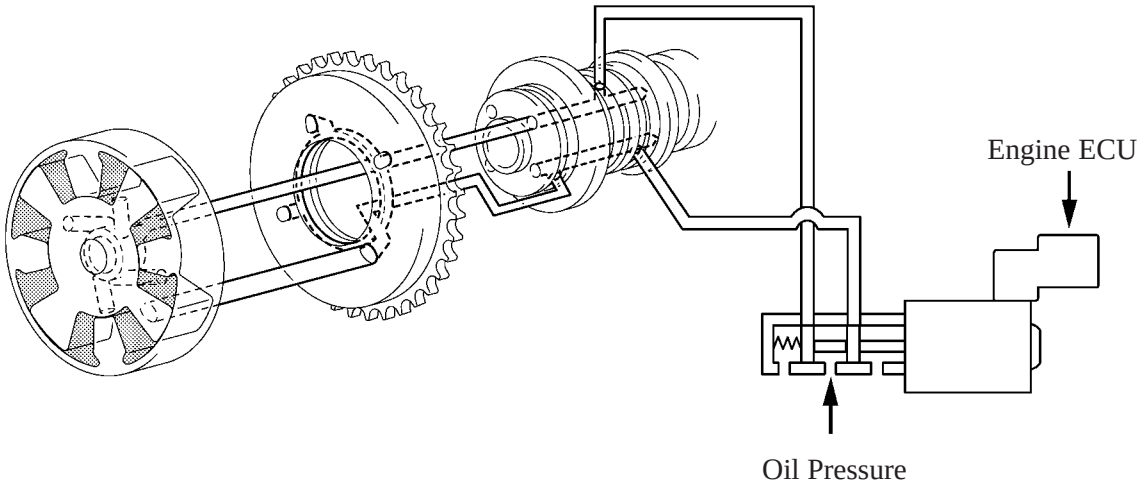

198EG37

- In proportion to the engine speed, intake air volume, throttle position and water temperature, the engine ECU calculates an optimal valve timing under each driving condition and controls the camshaft timing oil control valve. In addition, the engine ECU uses signal from the camshaft position sensor and the crankshaft position sensor to detect the actual valve timing, thus it is possible to perform feedback control to achieve the target valve timing.

▶ Operation During Various Driving Conditions (Conceptual Diagram) ◀

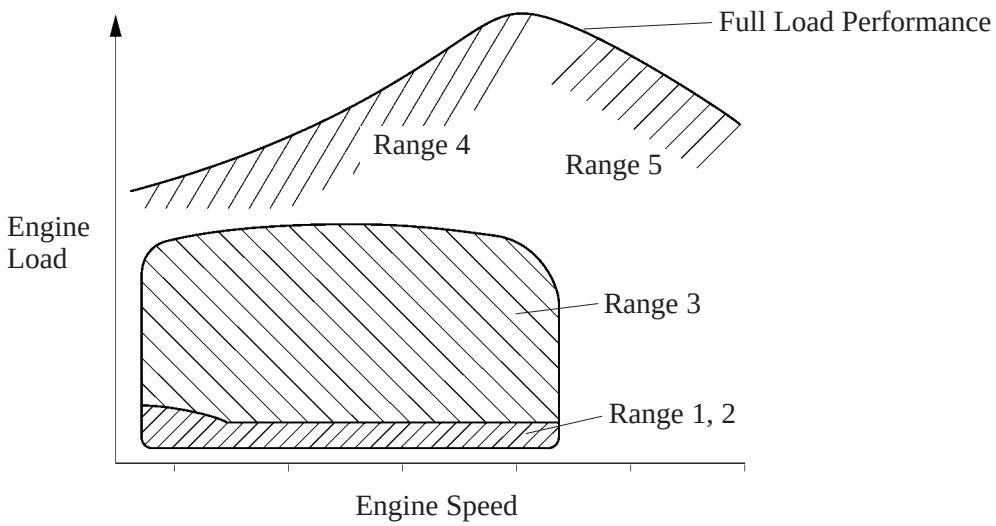

162EG46

Operation State	Range	Valve Timing	Objective	Effect
During Idling	1	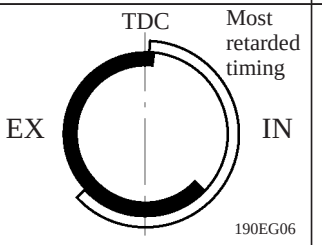	Most retarded timing reduces blow back to the intake side	Stabilized idling rpm Better fuel economy
At Light Load	2	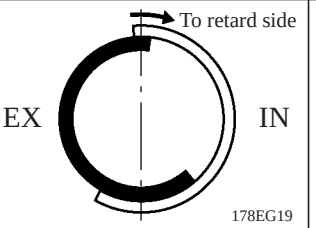	Decreasing overlap to eliminate blow back to the intake side	Ensured engine stability
At Medium Load	3	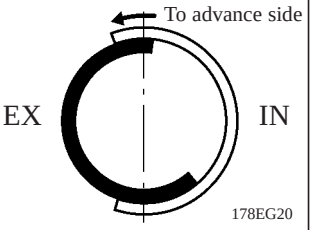	Increasing overlap to increase internal EGR for pumping loss elimination	Better fuel economy Improved emission control
In Low to Medium Speed Range with Heavy Load	4	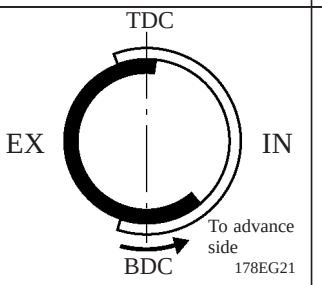	Advancing the intake valve close timing for volumetric efficiency improvement	Improved torque in low to medium speed range
In High Speed Range with Heavy Load	5	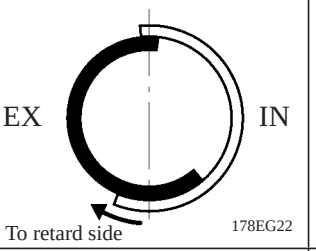	Retarding the intake valve close timing for volumetric efficiency improvement	Improved output
At Low Temperatures	–	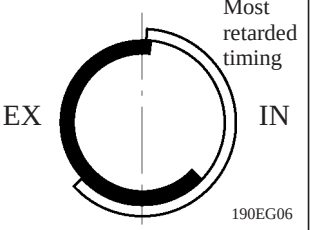	Most retarded timing to prevent blow back to the intake side leads to the lean burning condition, and stabilizes the idle speed at fast idling	Stabilized fast idle rpm Better fuel economy
Upon Starting/ Stopping the Engine	–	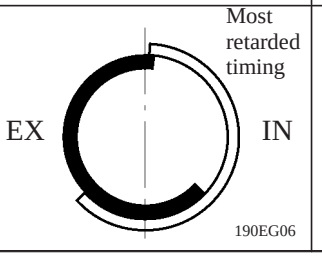	Most retarded timing minimizes blow back to the intake side	Improved startability

7. Fuel Pump Control

A fuel cut control is adopted to stop the fuel pump when the airbag is deployed at the front or side* collision. In this system, the airbag deployment signal from the airbag sensor assembly is detected by the engine ECU, and it turns OFF the circuit opening relay.
After the fuel cut control has been activated, turning the ignition switch from OFF to ON cancels the fuel cut control, thus engine can be restarted.

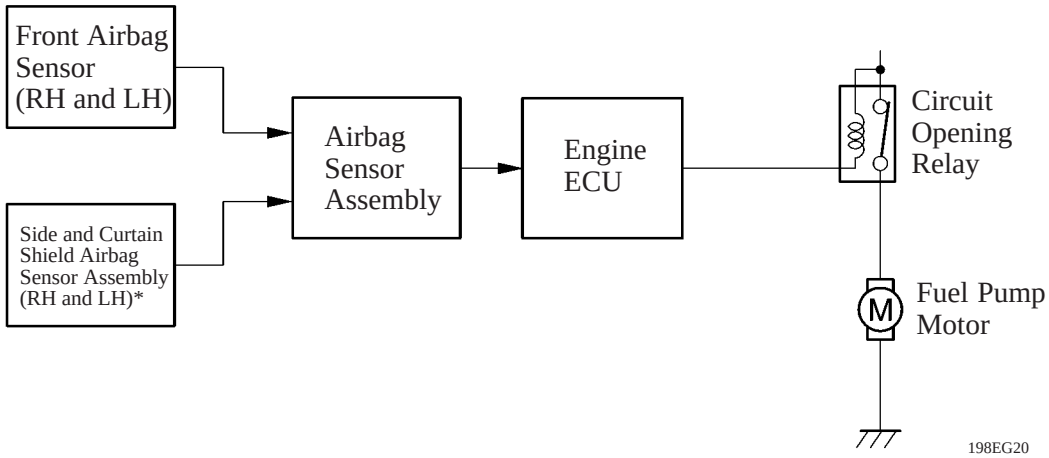

*: with SRS Side and Curtain Shield Airbag System

8. Cooling Fan Control

In contrast to the previous electric cooling fan system, the cooling fan main relay and the water temperature switch have been discontinued. Instead, by sharing the water temperature sensor to control the fan motor, a simpler system has been realized.
This cooling fan control turns 3 fan relays ON/OFF in accordance with the water temperature and the operating conditions of the air conditioner system. When it is ON, the control is switched to operate the 2 fan motors at Low (serial) or High (parallel).

▶ Wiring Diagram ◀

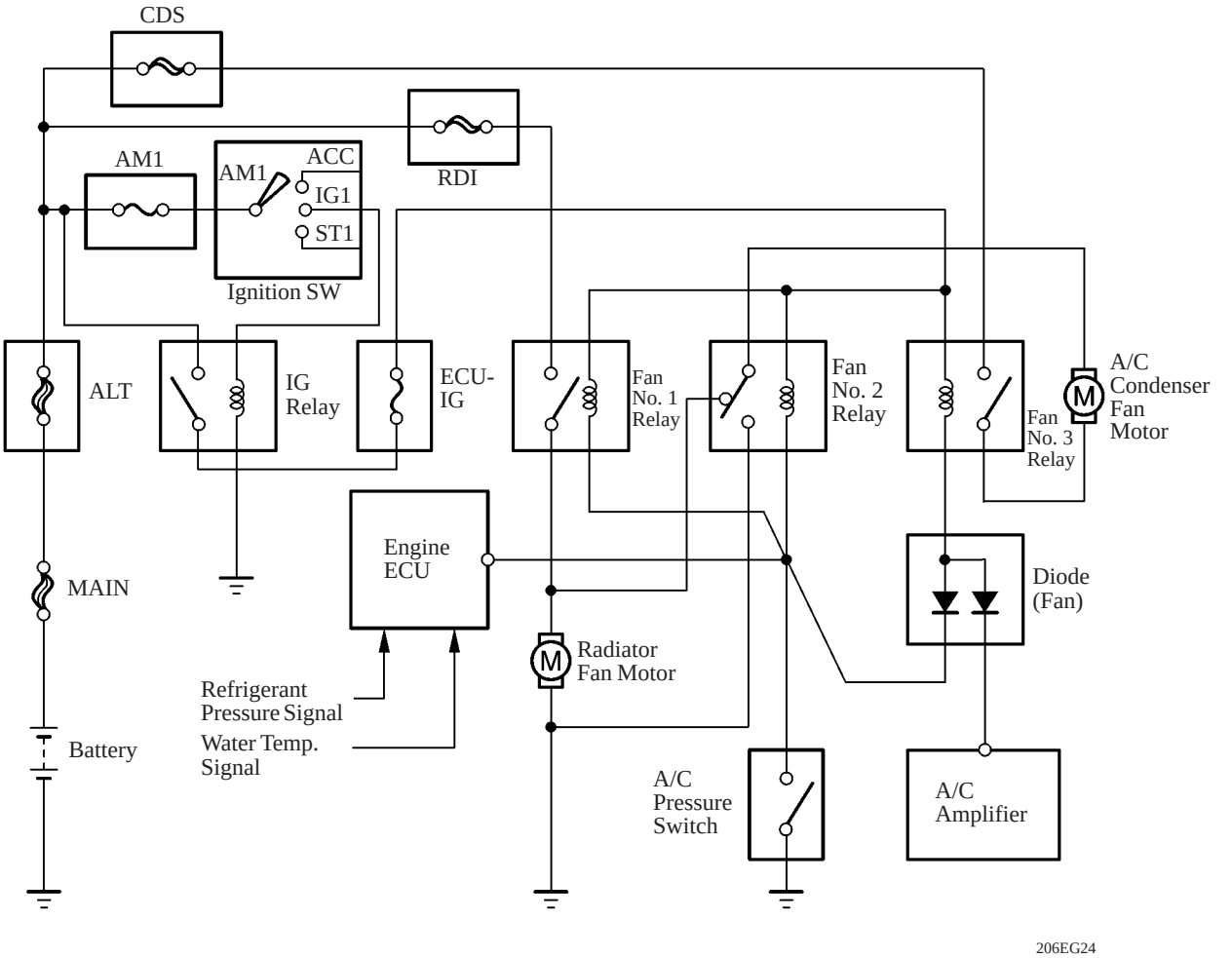

▶ Cooling Fan Operation ◀

Air Conditioner Condition		Water Temperature	
Compressor	Refrigerant Pressure	About 83°C (181°F) or Lower	About 90°C (194°F) or Higher
OFF	1.2 MPa (12.5 kgf/cm^2) or Lower	OFF	High
ON	1.2 MPa (12.5 kgf/cm^2) or Lower	Low	High
	1.5 MPa (15.5 kgf/cm^2) or Higher	High	High

1CD-FTV ENGINE

■ DESCRIPTION

The 1CD-FTV TOYOTA D-4D (Direct injection 4 Stroke common-rail Diesel) is in-line 4-cylinder, 2.0 liter, 16-valve DOHC turbocharged with intercooler diesel engine.
This engine is a based on the 1CD-FTV engine equipped on the Avensis, to which the following major changes have been made in its application to the Avensis Verso/Picnic:

- Variable nozzle turbocharger has been adopted. (High performance)
- EGR cooler that complies with European STEP III regulations has been adopted. (Clean emissions)
- Oil filter has been relocated. (Good serviceability)

This engine is the same as the 1CD-FTV on the Previa, which is based on the 1CD-FTV engine of the Avensis. Its major difference is the lack of the balance shaft.

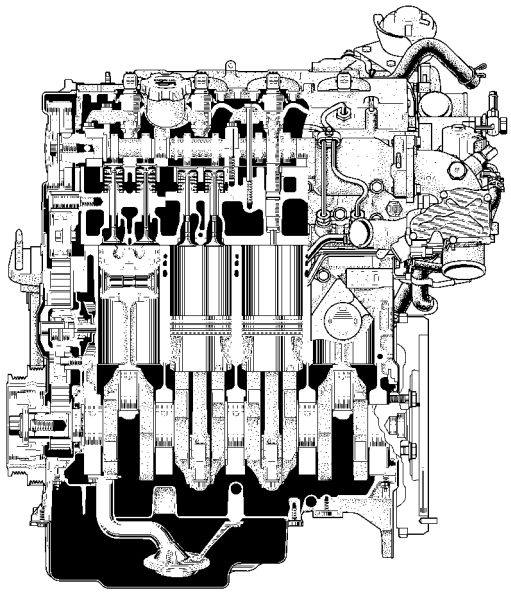

206EG25

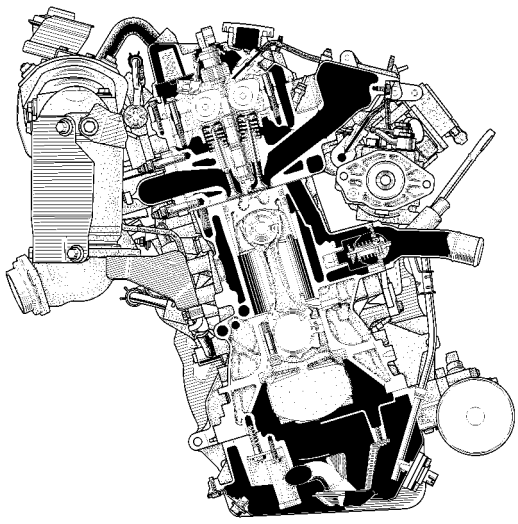

206EG26

▶ Engine Specification ◀

Model			Avensis verso /Picnic	Avensis	Previa
Engine Type			1CD-FTV	←	←
No. of Cyls. & Arrangement			4-Cylinder, In-line	←	←
Valve Mechanism			16-Valve, DOHC, Belt & Gear Drive	←	←
Combustion Chamber			Direction Injection Type	←	←
Manifolds			Cross-Flow	←	←
Fuel System			Common-Rail Type	←	←
Displacement cm^3 (cu. in.)			1995 (121.7)	←	←
Bore × Stroke mm (in.)			82.2 × 94.0 (3.24 × 3.7)	←	←
Compression Ratio			18.6 : 1	←	←
Max. Output [EEC]			85 kW @ 4000 rpm	81 kW @ 4000 rpm	85 kW @ 4000 rpm
Max. Torque [EEC]			250 N·m @ 1800 - 3000 rpm	250 N·m @ 2000 - 2400 rpm	250 N·m @ 1800 - 3000 rpm
Valve Timing	Intake	Open	2° BTDC	←	←
		Close	31° ABDC	←	←
	Exhaust	Open	51° BBDC	←	←
		Close	0° ATDC	←	←
Fuel Cetane Number			48 or more	←	←
Dry Weight			Approx. 201 kg (Approx. 443 lb)	Approx. 189 kg (Approx. 417 lb)	Approx. 208 kg (Approx. 459 lb)
Oil Grade			CF, 5W-30	CF-4, 10W-30	CF, 5W-30

▶ Performance Curve ◀

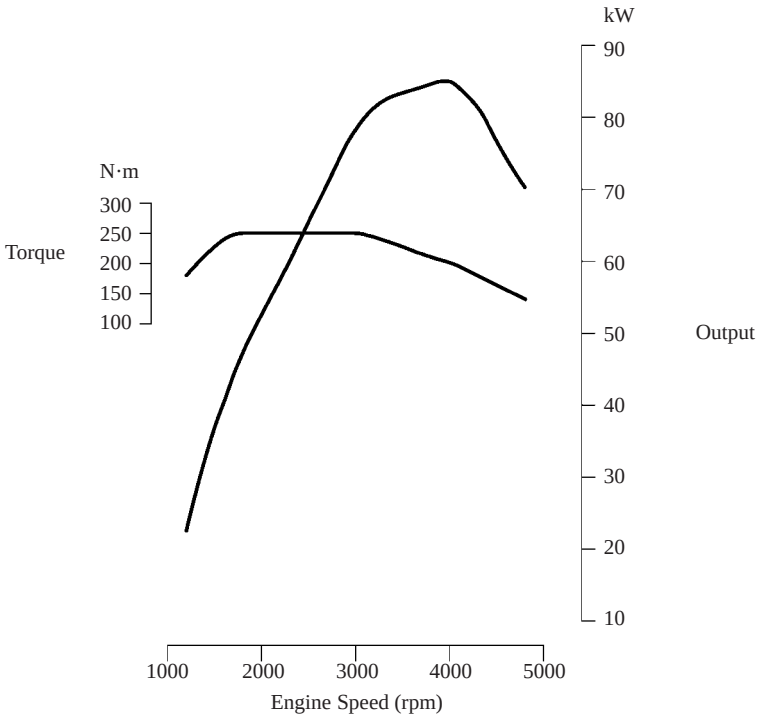

■MAJOR DIFFERENCE

▶ From Avensis ◀

Item		Outline
Engine Proper	Cylinder Head Cover	The oil filler cap has been relocated.
	Crankshaft Pulley	The crankshaft pulley with bending dumper has been adopted.
Lubrication System		The oil filter has been relocated.
Intake and Exhaust System		• A water passage has been provided in EGR valve and EGR cooler. • A step motor has been adopted on the EGR valve. • The water-cooling type EGR cooler has been adopted. • A variable nozzle vane type turbocharger has been adopted. • Two catalytic converters have been adopted in order to comply with the European STEP III regulations.
Charging System		• SC alternator has been adopted. • A one-way clutch function has been provided in the alternator pulley. • V-ribbed belt has been adopted to alternator drive belt, and automatic tensioner has been adopted to belt tensioner.
Engine Control System		• The accelerator pedal switch has been discontinued. • Some DTCs (Diagnosis Trouble Codes) have been added or discontinued. • A vacuum regulating valve and VSV for EGR have discontinued. • A turbocharger control has been adopted.

▶ From Previa ◀

Item		Outline
Engine Proper	Cylinder Block	The crankshaft position sensor is provided on the front of the engine.
	Crankshaft	The balance shaft drive gear has been discontinued, and the timing rotor for the crankshaft position sensor has been relocated.
	Crankshaft Pulley	The crankshaft pulley with bending dumper has been adopted.
	Balance Shaft	There is no provision of a balance shaft.

■ENGINE PROPER

1. Cylinder Head Cover

In conjunction with the application of this engine on the Avensis Verso/Picnic, the oil filler cap has been relocated to the front of the vehicle in consideration of serviceability.

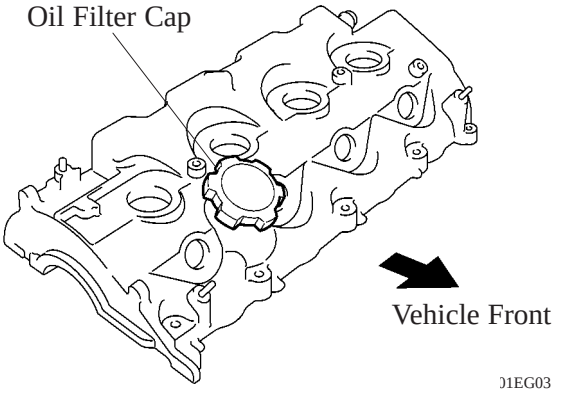

2. Cylinder Head

- The cylinder head is made of aluminum alloy.
- The injector has been located in the center of the combustion chamber in order to improve engine performance and clean emission.
- A glow plug is placed between the intake ports of each cylinder to ensure startability.

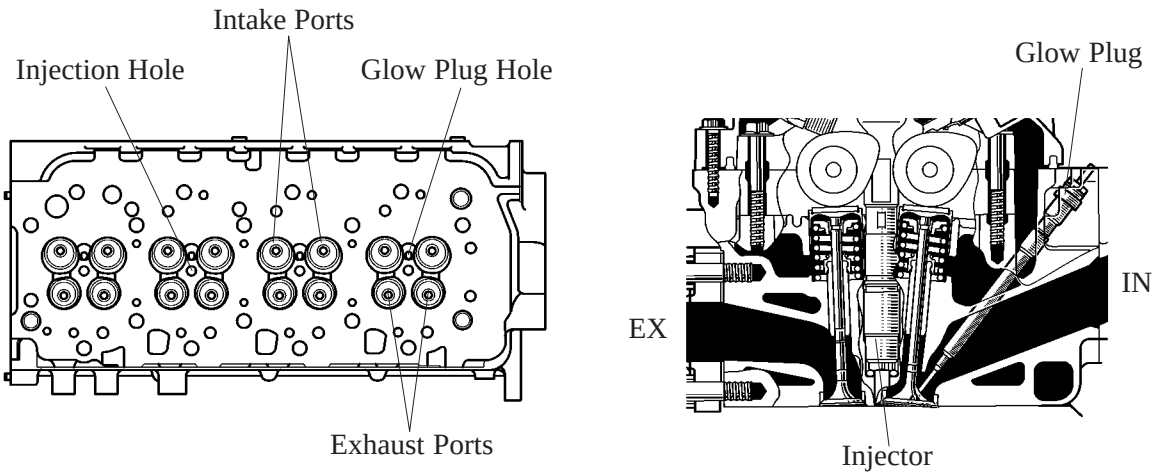

Service Tip

When reusing the cylinder head bolt, if the thread outside diameter at the measuring portion is less than 10.40 mm (0.4094 in.), it is necessary to replace them with new ones.

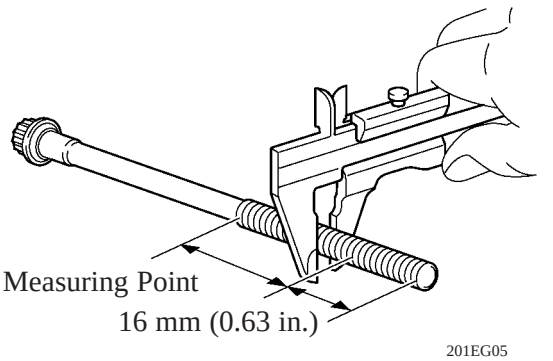

3. Cylinder Head

This gasket has adopted a 3-layer steel laminate construction.

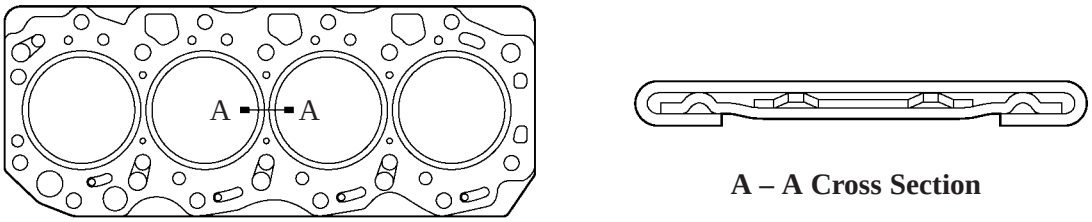

201EG06

Service Tip

There are 5 sizes of new cylinder head gaskets, Marked “A”, “B”, “C”, “D”, or “E”, according to Piston protrusion, For details, refer to see the 1CD-FTV Engine Repair Manual (Pub. No. RM866E).

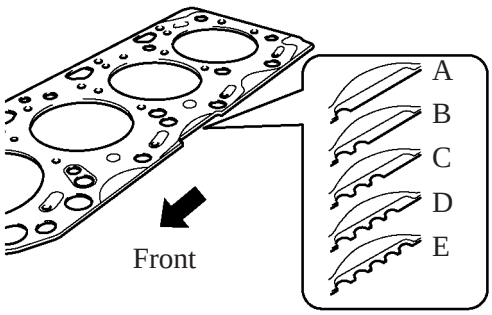

201EG07

4. Cylinder Block

- This cylinder block is constructed of linerless cast iron alloy.
- By making the rear surface of the cylinder block in a box shape, thus aimed to improved low vibration high rigidity and light weight.
- By adoption of the rib and implementation of the wall thickness improvement for the cylinder block, optimal strength is secured.
- By expanding the thermostat housing and reducing the water flow resistance, thus improved the cooling performance.

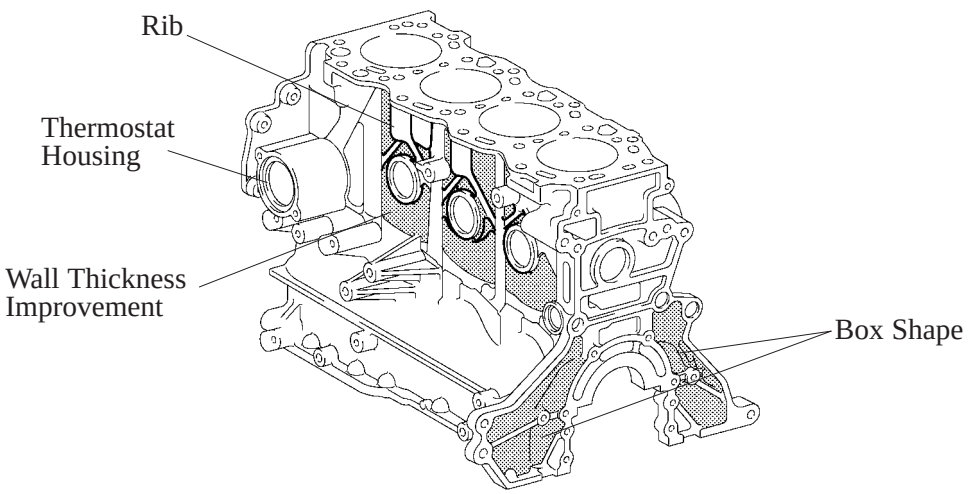

195EG73

5. Piston, Piston Pin and Piston Ring

- In conjunction with the adoption of direct injection, piston provided with combustion chamber has been adopted.
- A cooling channel has been provided to reduce the piston temperature.
- To improve the wear resistance of the top ring groove, a Ni-resist cast iron ring carrier has been adopted.
- Along with the improved engine performance, the piston skirt has been applied with resin coating to reduce friction loss.
- Full floating type piston pins are used.

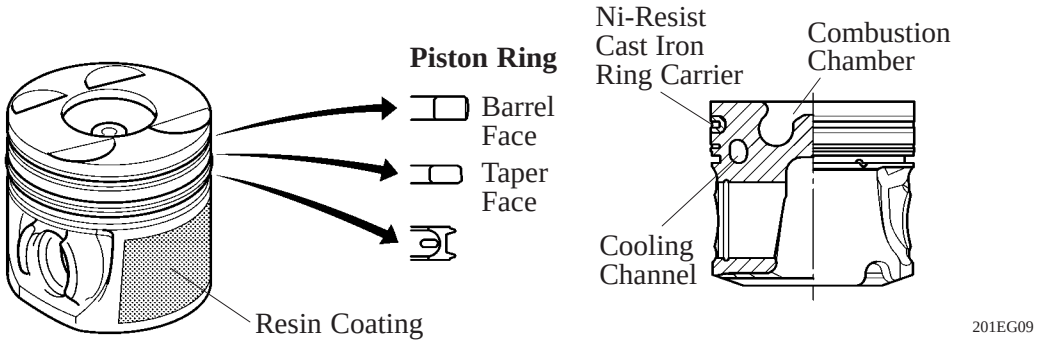

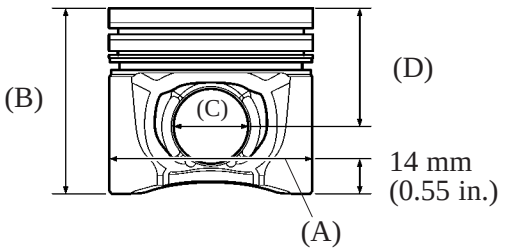

▶ **Specification** ◀

(A)	Basic Diameter	82.148 - 82.182 mm (3.2341 - 3.2355 in.)
(B)	Height	74.815 mm (2.945 in.)
(C)	Piston Pin Diameter	31.000 - 31.012 mm (1.2205 - 1.2209 in.)
(D)	Compression Height	47.815 mm (1.882 in.)
Material		Aluminum Alloy

6. Connecting Rod

To accommodate the high combustion pressure generated by the direct injection, this connecting rod is constructed of a special type of carbon steel that ensures the proper strength.

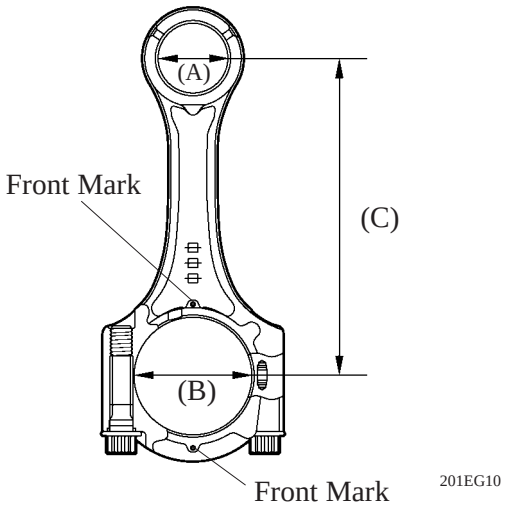

▶ **Specification** ◀

(A)	Small End Inside Diameter	31.015 - 31.027 mm (1.2211 - 1.2215 in.)
(B)	Big End Inside Diameter	53.5 - 53.518 mm (2.106 - 2.107 in.)
(C)	Center Distance Between Big and Small Ends	146 mm (5.75 in.)

Service Tip

- When reusing the connecting rod cap bolts, if the diameter at the measuring portion is less than 8.0 mm (0.315 in.), it is necessary to reduce them with new ones.

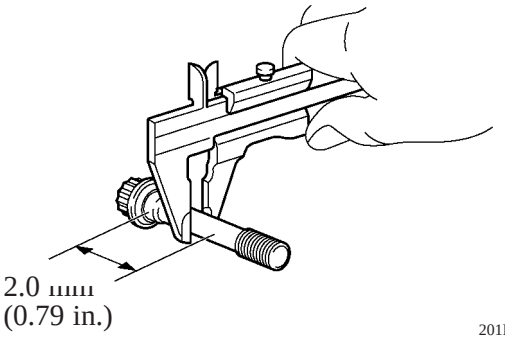

201EG11

- If using a standard bearing, replace it with one having the same number. If the number of the bearing cannot be determined, select the correct bearing by adding together the numbers imprinted on the crankshaft and connecting rod cap, then selecting the bearing with the same number as the total. There are 5 sizes of standard bearings, marked "1", "2", "3", "4" and "5" accordingly.

	Number marked								
Connecting rod cap	1			2			3		
Crankshaft	0	1	2	0	1	2	0	1	2
Use bearing	1	2	3	2	3	4	3	4	5

EXAMPLE: Connecting rod cap "2" + Crankshaft "1"
= Total number 3 (Use bearing "3")

For details, refer to the 1CD-FTV Engine Repair Manual (Pub. No. RM866E).

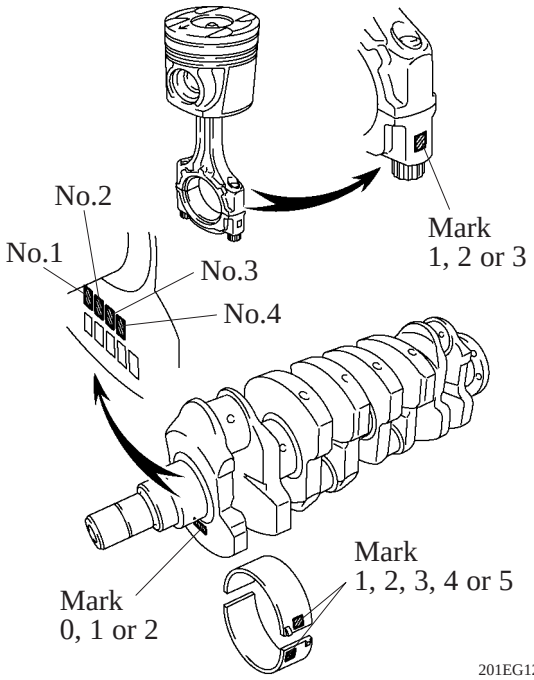

201EG12

7. Crankshaft

- A forged crankshaft with 5 main journals, 4 connecting rod pins and 8 balance weights is used.
- The crankshaft pins and main journals have been induction-hardened to ensure their reliability.

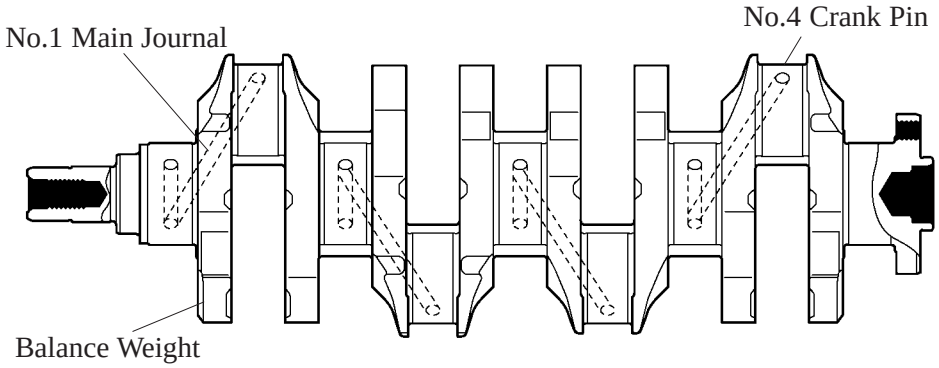

206EG27

Service Tip

If using a standard bearing, replace it with one having the same number. If the number of the bearing cannot be determined, select the correct bearing by adding together the numbers imprinted on the cylinder block and crankshaft, then selecting the bearing with the same number as the total. There are 5 sizes of standard bearings, marked “1”, “2”, “3”, “4” and “5” accordingly.

	Number marked								
Cylinder block	1			2			3		
Crankshaft	0	1	2	0	1	2	0	1	2
Use bearing	1	2	3	2	3	4	3	4	5

EXAMPLE: Cylinder block “2” + Crankshaft “1” = Total number 3 (Use bearing “3”)

For details, refer to the 1CD-FTV Engine Repair Manual (Pub. No. RM866E).

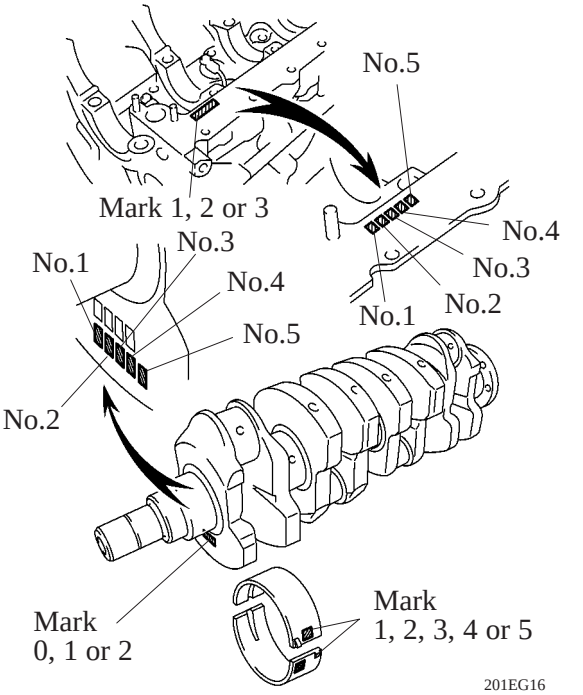

8. Crankshaft Pulley

- The crankshaft pulley with bending dumper has been adopted to reduce noise and vibration.

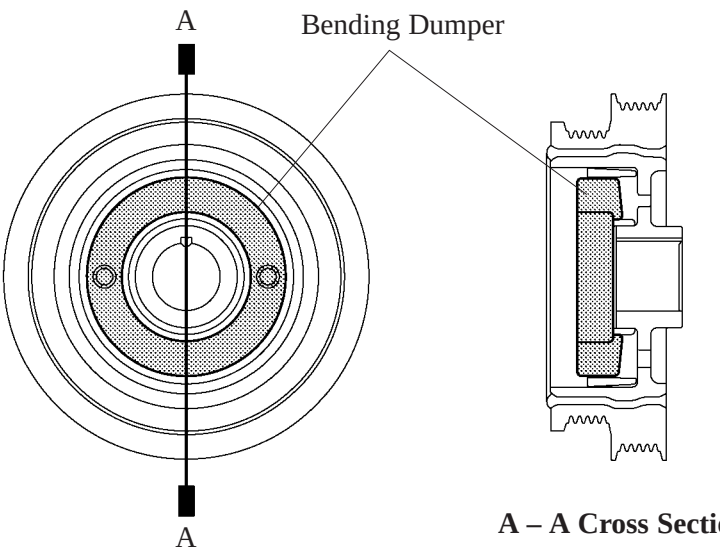

A – A Cross Section

■VALVE MECHANISM

1. General

- Each cylinder has 2 intake valves and 2 exhaust valves. Intake and exhaust efficiency is increased by means of the larger total port areas.
- Outer type valve adjusting shims, which are located on top of the valve lifter.
- A vacuum pump is driven by exhaust camshaft.
- The exhaust camshaft is driven by a timing belt, while the intake camshaft is driven through gear on the exhaust camshaft.
- Small-diameter, and flat-teeth gear are used for driving the intake camshaft in order to reduce gear noise.

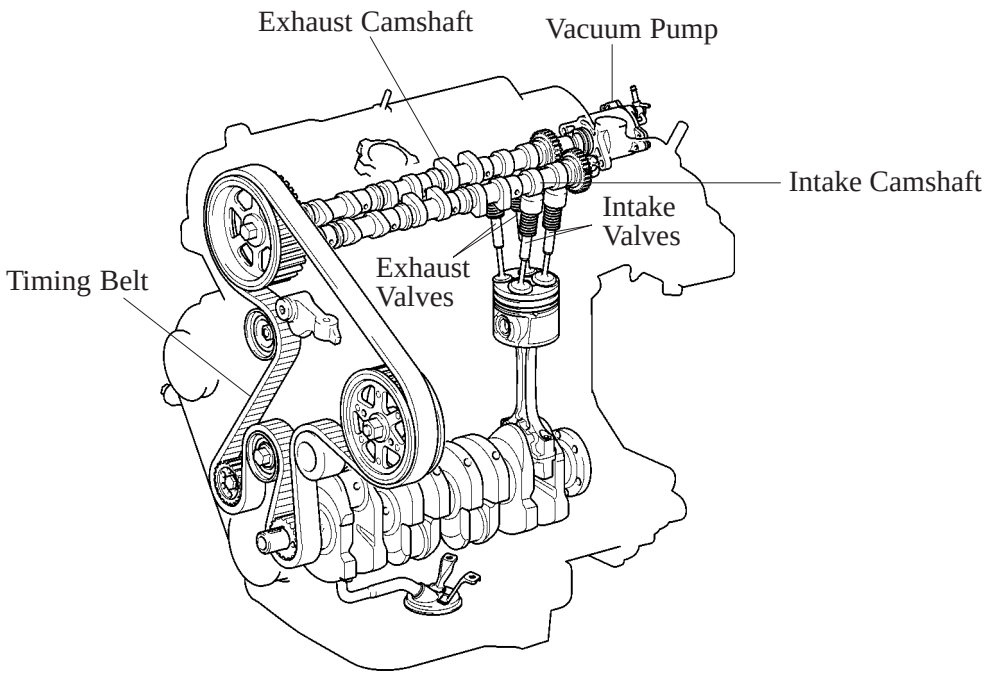

201EG18

2. Camshaft

The cam nose has been chill treated to ensure its abrasion resistance.

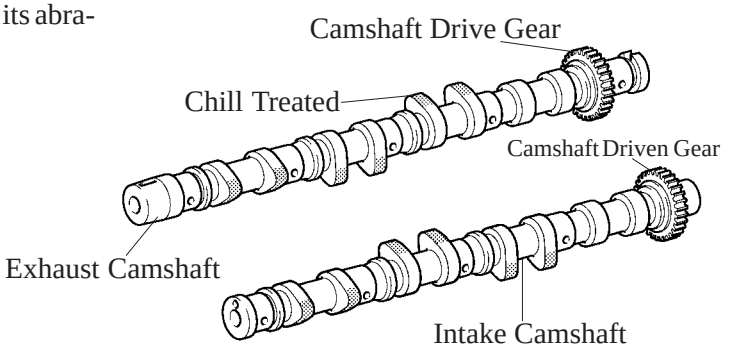

▶ Cam Profile ◀

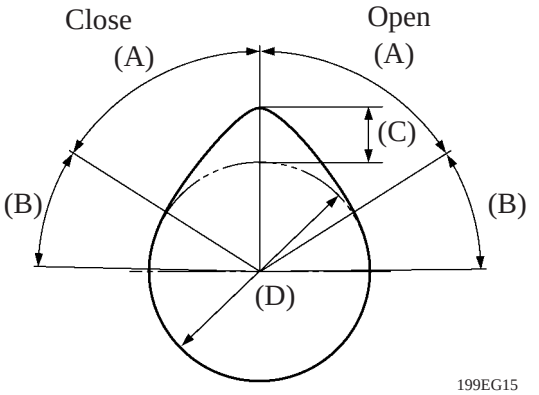

Cam		Intake		Exhaust	
Side		Open	Close	Open	Close
(A)	Lifter Operation Portion	53.25°	←	57.75°	←
(B)	Lifter Buffering Portion	23.87°	29.43°	36.09°	32.2°
(C)	Cam Height	7.220 mm (0.284 in.)		8.170 mm (0.321 in.)	
(D)	Diameter	39.4 mm (1.551 in.)		←	
Material		Cast-iron		←	

3. Intake and Exhaust Valves

- The adjusting shim has been located directly above the valve lifter. This construction allows the adjusting shim to be replaced without removing the camshaft, which improves the serviceability during valve clearance adjustment.
- A cutoff is provided in the valve lifter to improve the serviceability of the replacing the adjusting shims.

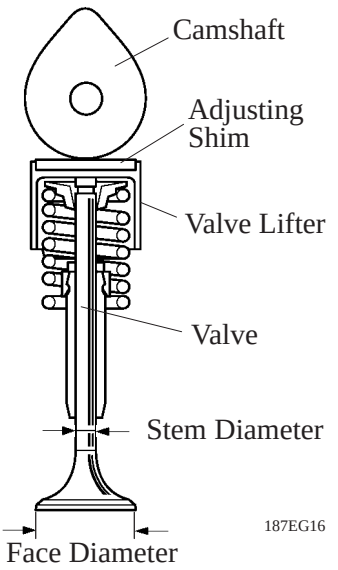

▶ Specifications ◀

Item	Intake Valve	Exhaust Valve
Face Diameter	28.0 mm (1.10 in.)	24.0 mm (0.94 in.)
Stem Diameter	6.0 mm (0.236 in.)	←

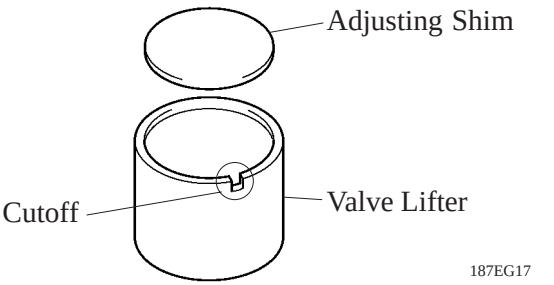

Service Tip

Adjusting shims are available in 17 increments of 0.050 mm (0.0020 in.), from 2.50 mm (0.0984 in.) to 3.30 mm (0.1299 in.). For details, refer to see the 1CD-FTV Engine Repair Manual (Pub. No. RM866E).

4. Timing Belt Relation

The automatic tensioner suppresses noise generated by the timing belt.

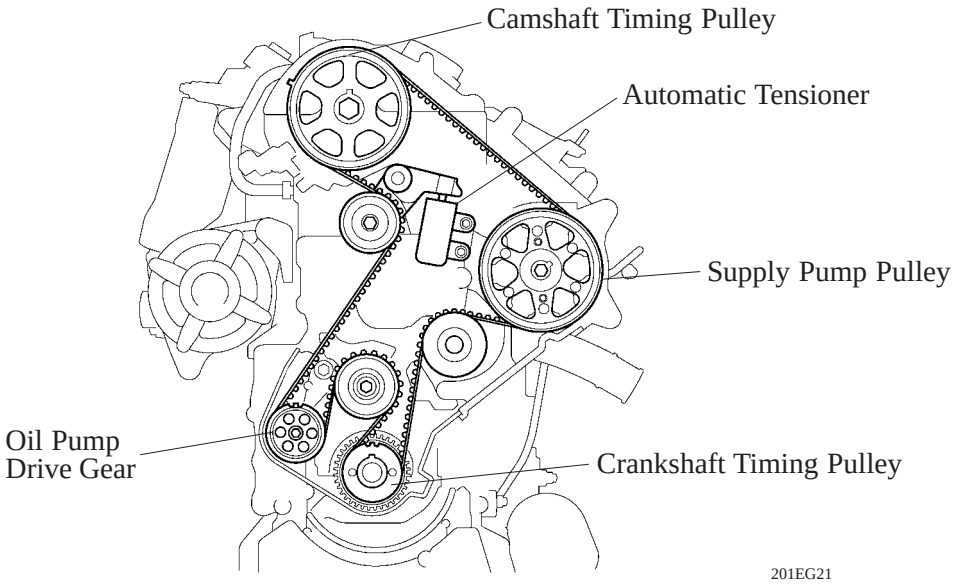

Service Tip

- The maintenance interval of the timing belt is every 150,000 km.
- For the purpose of replacing the timing belt, installation marks are provided on the crankshaft timing pulley and the oil pump, the camshaft timing pulley and the mating surface of the cylinder head cover, and the supply pump pulley and the water pump.

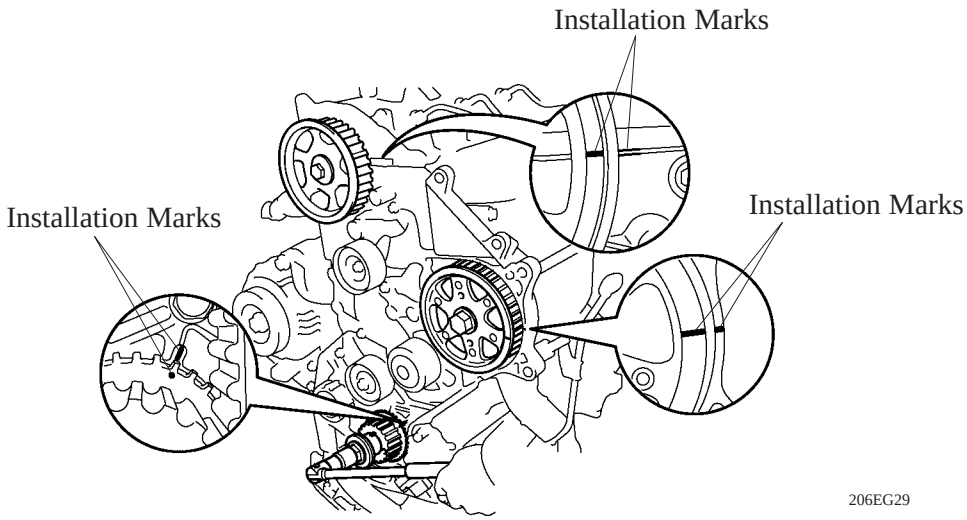

■LUBRICATION SYSTEM

- The lubrication circuit is fully pressurized and all oil passes through an oil filter.
- A trochoid gear type oil pump is driven by the timing belt.
- The water-cooled type engine oil cooler is used to lower the oil temperature.
- Oil jets have been provided for cooling the pistons.
- An oil level sensor is provided in the oil pan for efficient servicing.

— Change (from Avensis) —

In conjunction with the application of this engine on the Avensis Verso/Picnic, the oil filter has been relocated in order to ensure serviceability. Accordingly, the oil catch plate has been discontinued.

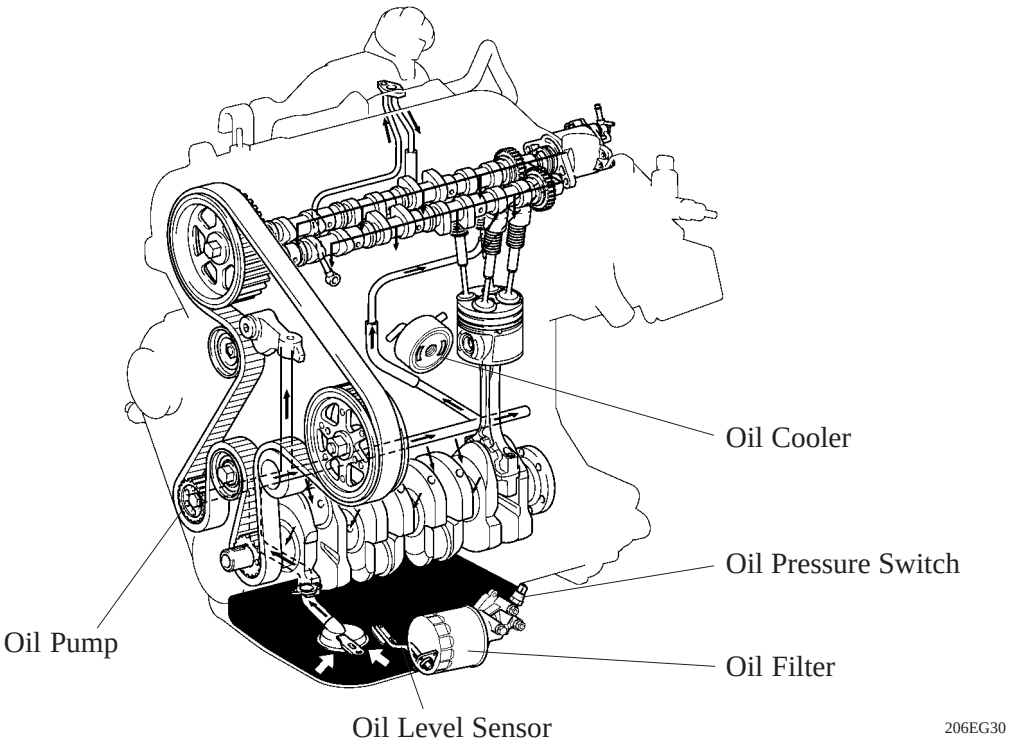

206EG30

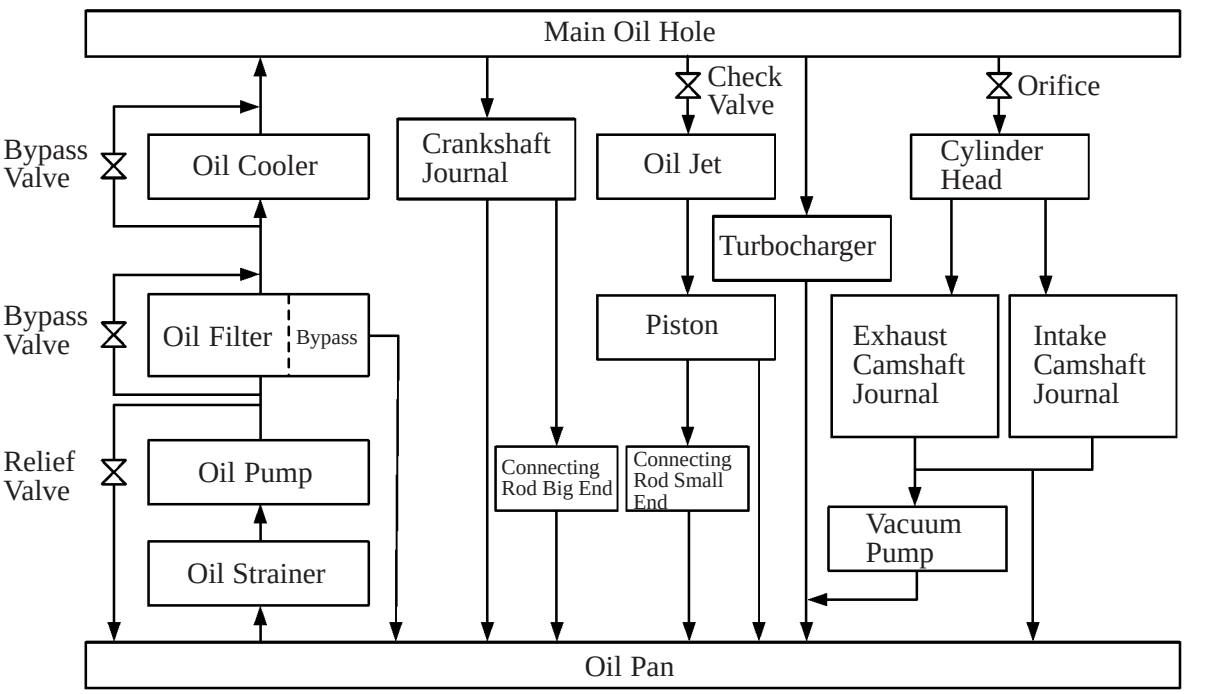

201EG31

▶ Specification ◀

Oil Capacity	Dry	6.7 liters (7.1 US qts, 5.9 Imp. qts)	
	with Oil Filter	5.9 liters (6.2 US qts, 5.2 Imp. qts)	
	without Oil Filter	5.3 liters (5.6 US qts, 4.7 Imp. qts)	
Oil Pump	Type	Trochoid Gear	
	Pump Speed	990-1010 rpm	4455-4545 rpm
	Discharge Volume	10.0 l/min or more	67.8 l/min or
	Discharge Pressure	200 kPa (2.0 kgf/cm^2, 29 psi)	290 kPa (3.0 kgf/cm^2, 43 psi)
	Relief Valve Opening Pressure	—	590 kPa (6.0 kgf/cm^2, 85.3 psi)
Oil Filter	Type	Full-flow + Bypass	
	Oil Capacity	Approx. 0.61 liters (0.64 Us qts, 0.54 Imp. qts)	
	Bypass Valve Opening Pressure	80 – 120 kPa (0.8 – 1.2 kgf/cm^2)	

■COOLING SYSTEM

1. General

- The cooling system is a pressurized, forced-circulation type.
- A pressurized reservoir tank has been adopted to prevent the engine coolant deteriorating upon contact with external air.
- A thermostat, having a bypass valve, is located on the water pump inlet side of the coolant circuit. As the coolant temperature rises, the thermostat open the water bypass passage closes, so the system maintains suitable temperature distribution in the cylinder head.
- An aluminum radiator core is used for weight reduction.

— Changes (from Avensis) —

- A water passage has been provided for cooling the EGR valve.
- A water-cooled EGR cooler has been provided.

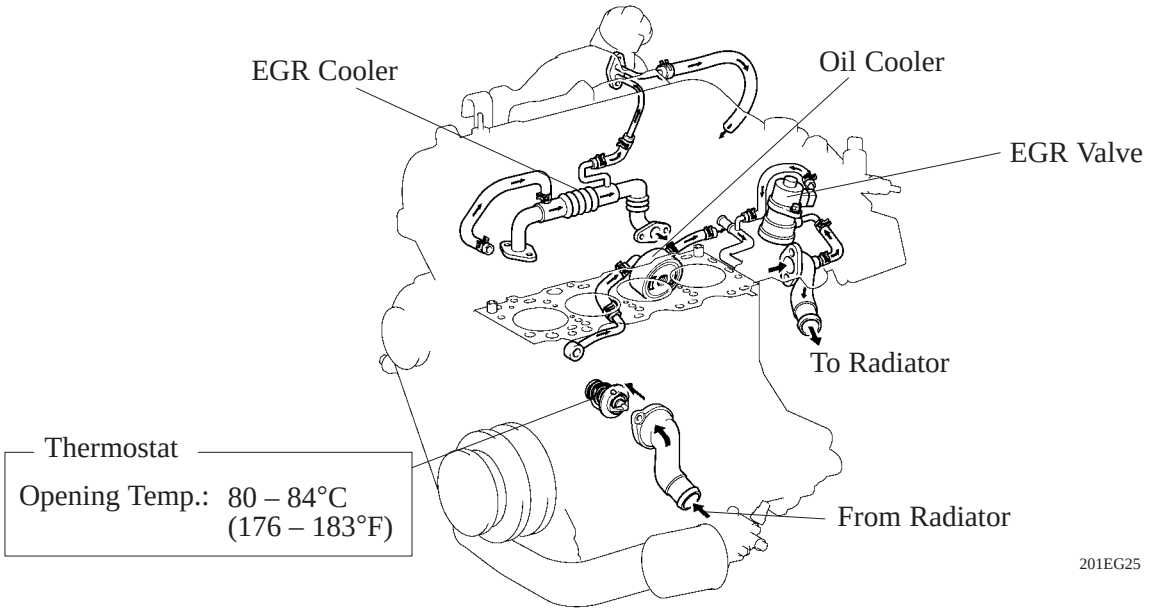

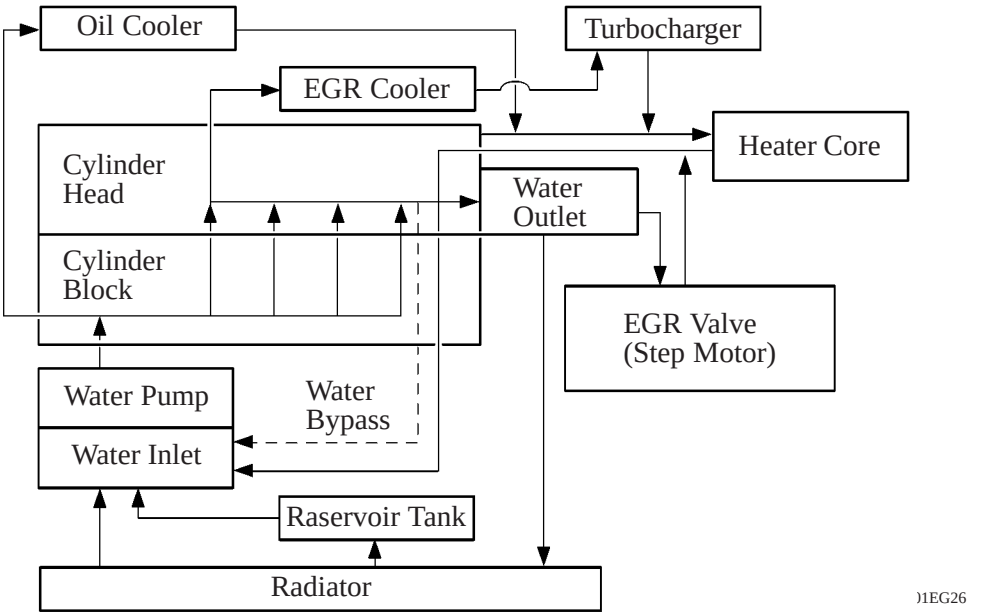

2. Pressuried Reservoir Tank

This reservoir tank has following feature.

- Prevent the engine coolant not to deteriorate upon contact with external air.
- Prevent the engine coolant not to evaporate.
- The air in the water passage is separated into gaseous and liquid forms in the reservoir tank, the gas-liquid separation performance has been improved.

■INTAKE AND EXHAUST SYSTEM

1. General

- In conjunction with the adoption of the direct injection system, an equal-length port intake manifold provided with an intake chamber has been adopted in order to reduce the swirl variances among the cylinders.
- A step motor type throttle has been adopted to improve EGR performance and to reduce the vibration when stopping the engine.
- An air-cooled intercooler has been adopted.

— Changes (from Avensis) —

- A step motor has been provided on the EGR valve. Accordingly, the vacuum regulating valve and the VSV (for cutoff) have been discontinued.
- The water-cooling type EGR cooler has been adopted.
- A variable nozzle vane type turbocharger has been adopted.
- Two catalytic converters have been adopted in order to comply with the European STEP III regulations.

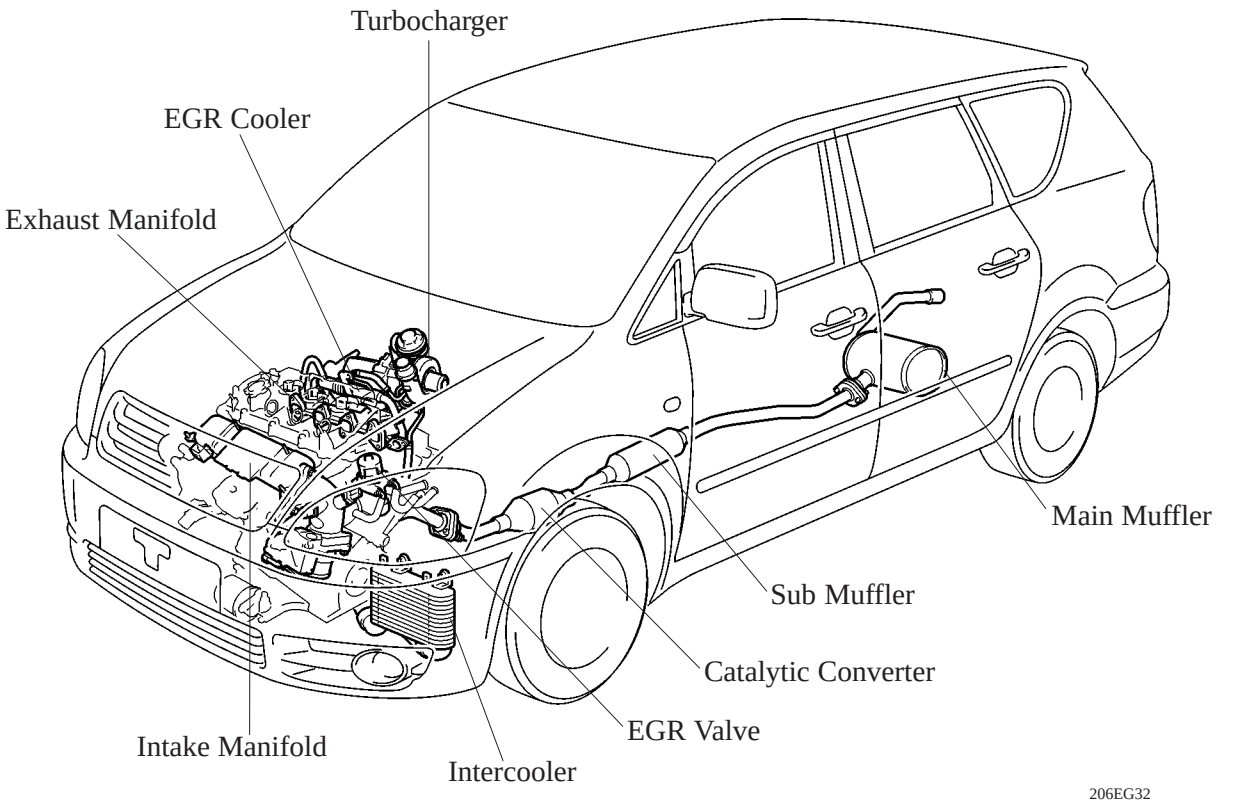

2. Air Cleaner

- The air cleaner case has been increased in size to help reduce the amount of intake air noise.
- A diffuser duct has been provided in the air cleaner case in order to help reduce the intake resistance.

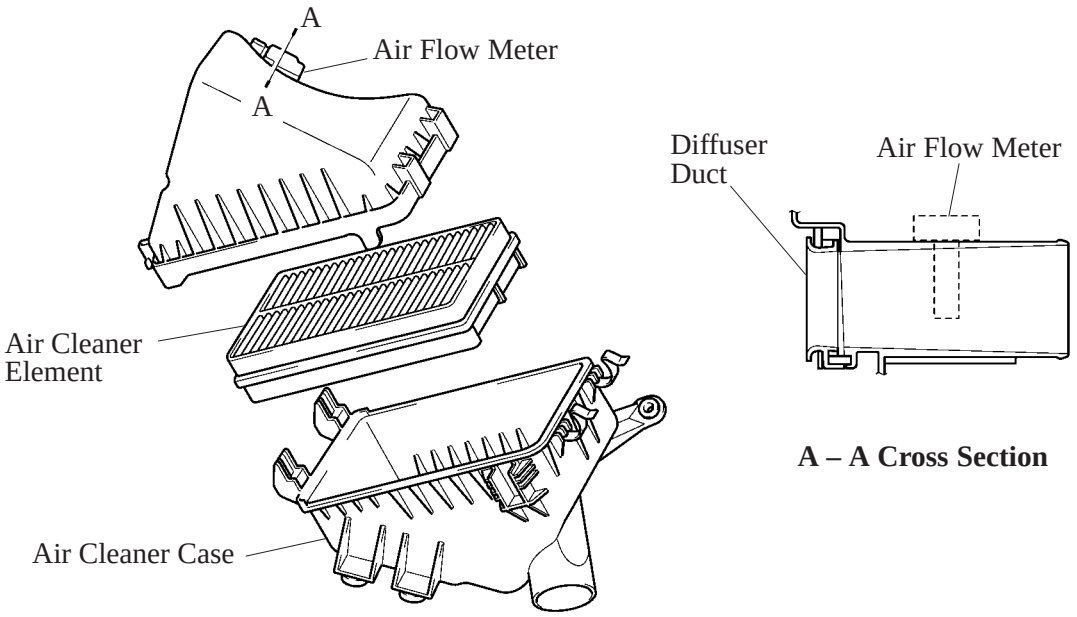

206EG33

3. Intercooler

An air cooled intercooler has been adopted in order to lower the intake air temperature, improve engine performance, and to realize cleaner exhaust gas emissions.

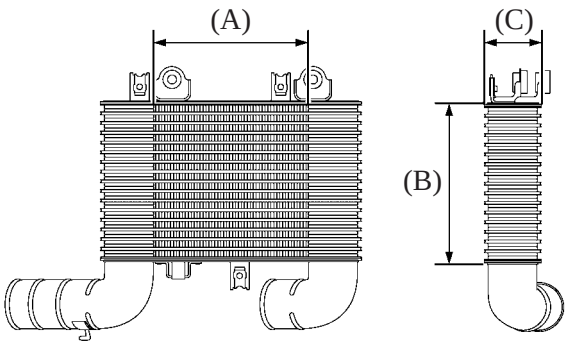

201EG28

▶ Specifications ◀

Type			Drawn Cup
Core Size	(A)	Height	175.0 mm (6.89 in.)
	(B)	Width	187.6 mm (7.39 in.)
	(C)	Thickness	65 mm (2.56 in.)
Material			Aluminum

EG

4. EGR System

General

This system is designed to help reduce and control NOx formation due to a slight reduction of peak temperature in the engine combustion chamber, which is accomplished by introducing a small amount of inert gas into intake manifold.
By adopting the exhaust gas passage in the cylinder head and the water cooling type EGR cooler, this makes it possible to lower the temperature of the exhaust gas and re-circulate the great amount of exhaust gas.

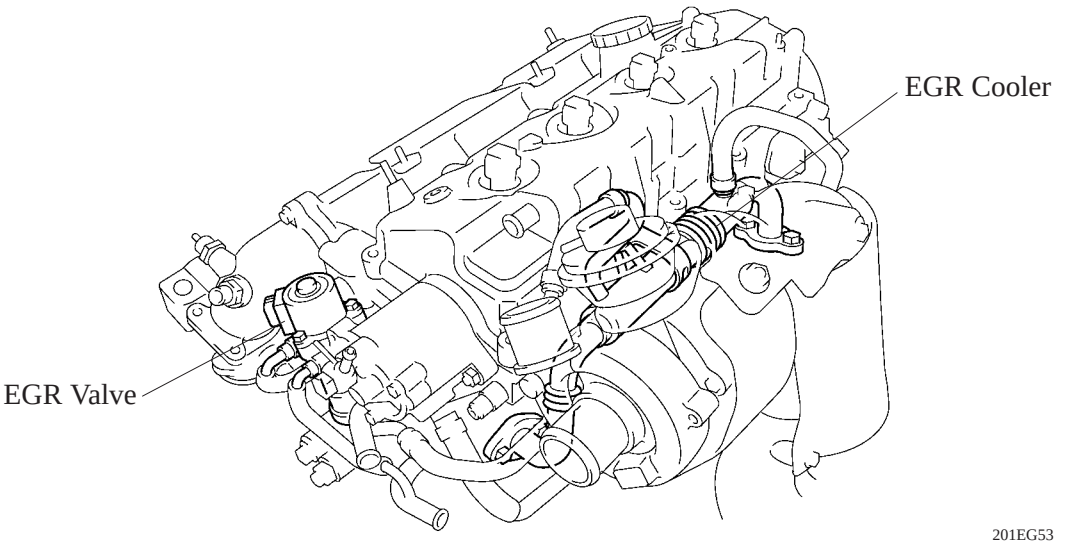

EGR Valve

- A step motor has been adopted on the EGR valve to enable the engine ECU to directly control the EGR valve.
- The engine coolant circulates through the EGR valve to ensure proper cooling performance.

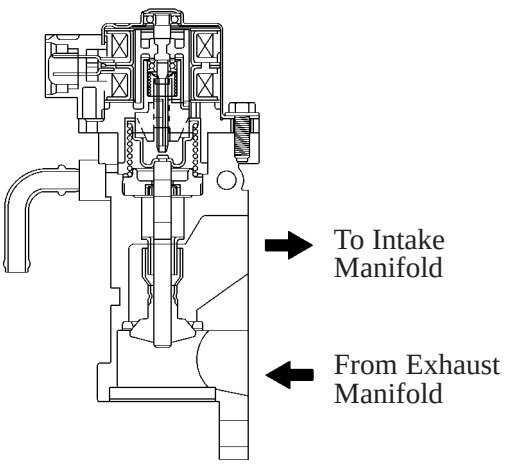

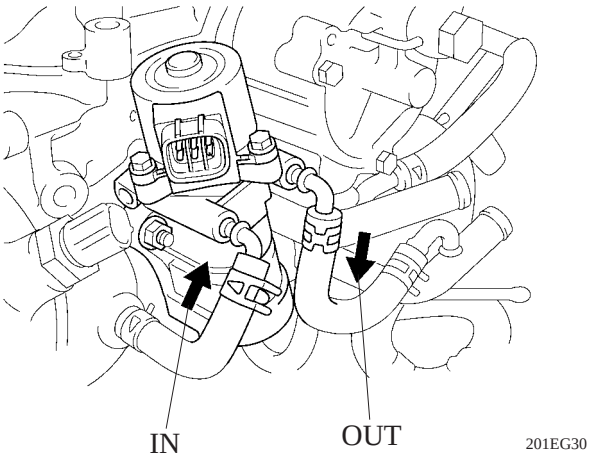

EGR Cooler

The water cooling type EGR cooler has been established in the EGR passage between the exhaust manifold and the cylinder head.

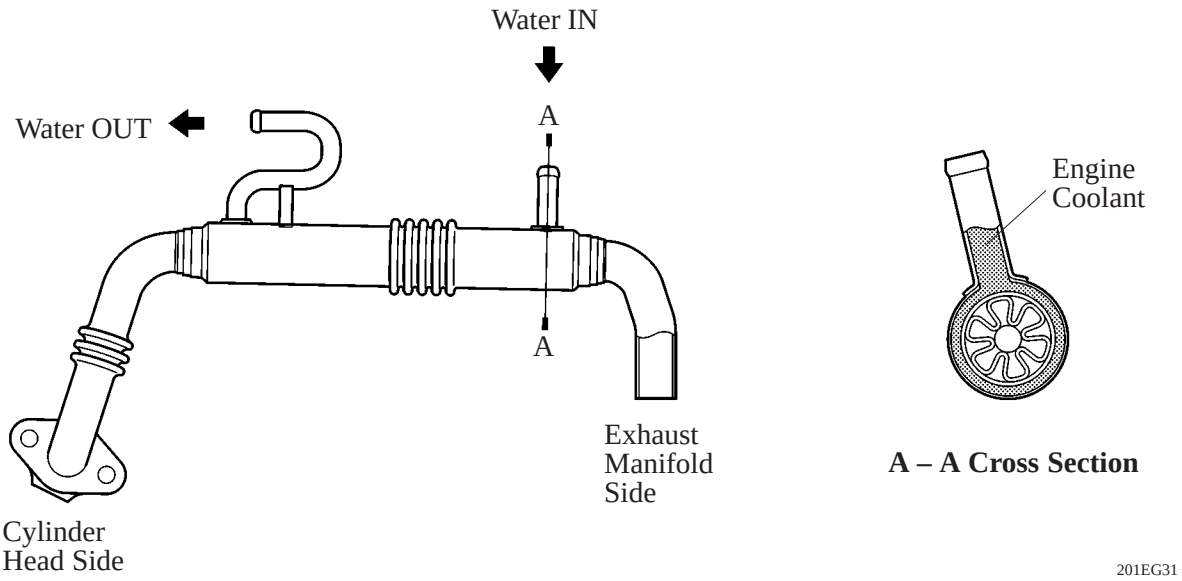

5. Turbocharger

General

- This turbocharger has been realized the great improvements of low speed torque, maximum output, fuel consumption and noise and emission reduction by controlling the nozzle vane variably and making the most suitable velocity of the exhaust gas inflow to the turbine at all times in response to the engine condition.
- The actuator is actuated by the vacuum pressure that has been regulated by the VRV (Vacuum Regulating Valve) in accordance with the signals from the engine ECU.

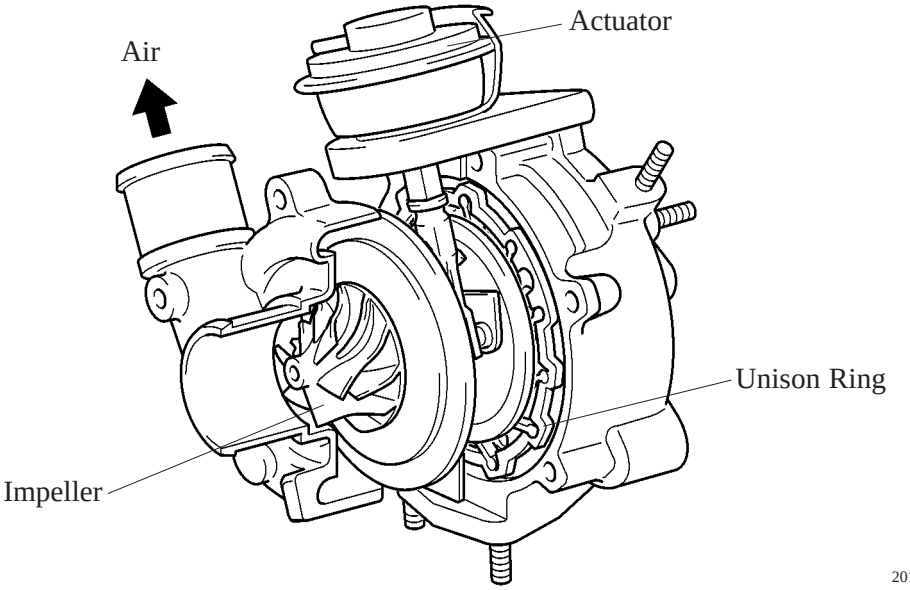

- The exhaust gas from the exhaust manifold goes through the nozzle vane inside the turbo charger housing, and flows to the exhaust pipe through the turbine. The speed of the turbine (supercharging pressure) differs depending on the flow velocity of the exhaust gas going through the turbine and the flow velocity of the exhaust gas is controlled by the opening. In such a time like idling, when the exhaust gas is less, the nozzle vane is fully closed, but as there is a slight clearance between the vanes, the exhaust gas flows through this clearance to the exhaust pipe. Therefore, there is no bypass.

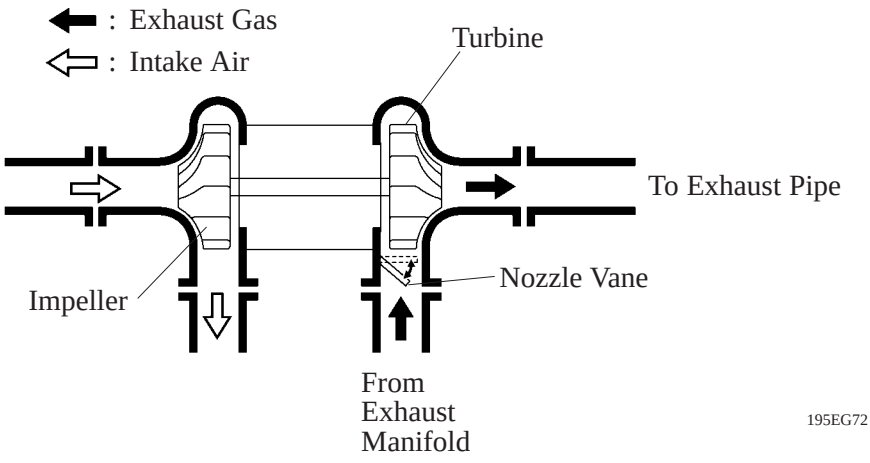

Construction

This turbocharger consists primarily of a impeller, turbine, actuator, nozzle vane, and unison ring.

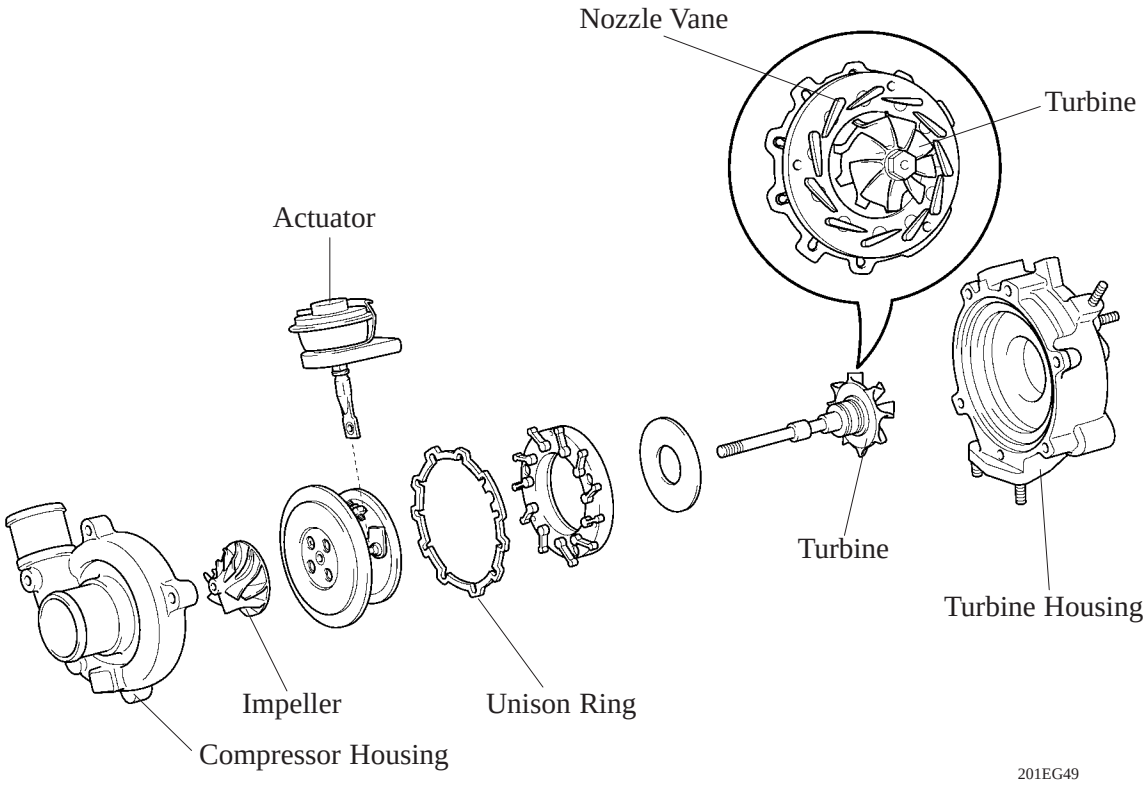

Service Tip

The inspection items and measurement values have been changed in conjunction with the adoption of the variable nozzle vane type turbocharger. Furthermore, this turbocharger cannot be disassembled. For details, refer to the 1CD-FTV Engine Repair Manual (Pub. No. RM866E).

Operation

a) At Low Load Range

When the engine is running in a low load range, the actuator pull up the linkage by a signal from the engine ECU. The tip of the actuator linkage is connected to the unison ring and turns it counter clockwise. The unison ring has a drive arm through the unison ring packet and this drive arm also moves according to the rotation direction of the unison ring. The fulcrum of the drive arm is an axis which is integrated with a nozzle vane behind the plated. When the drive arm moves counter-clockwise, the nozzle vane moves toward closing direction resulting in keeping up the suitable velocity of the exhaust gas running to the turbine and speed of the turbine, and then the torque will be improved when the engine is running at a low load.

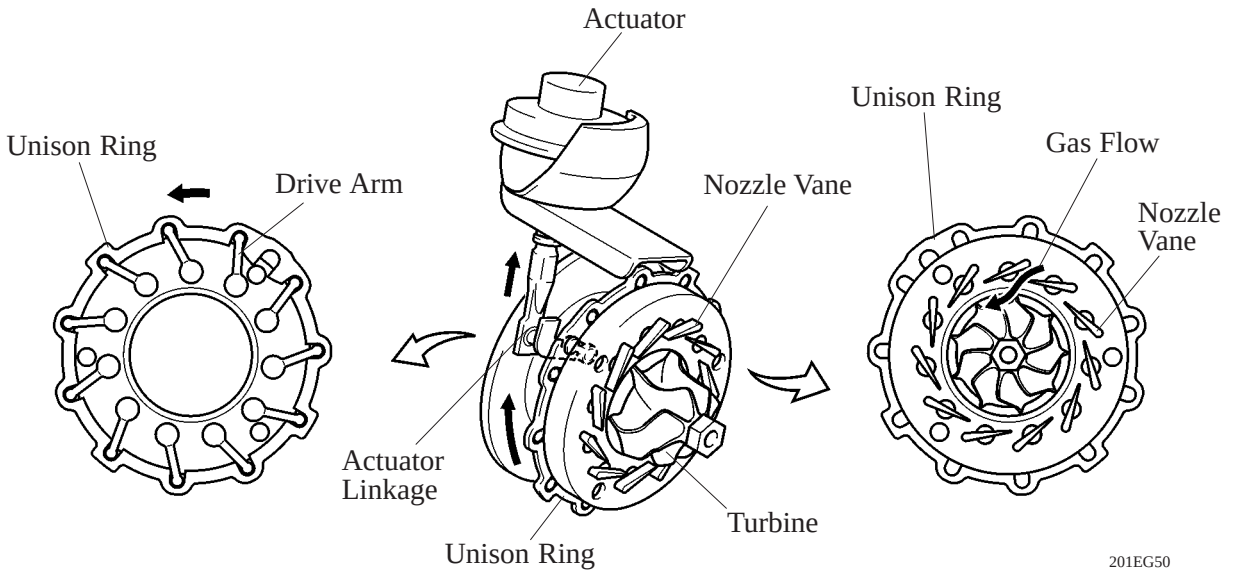

b) At High Load Range

When the engine is running in a high load range, the actuator pull down the linkage by a signal from the engine ECU. With this, the drive arm moves clockwise and this opens the nozzle vane and holds the specified supercharging pressure. Thus, lowering the exhaust gas back pressure and improving the out put and fuel consumption.

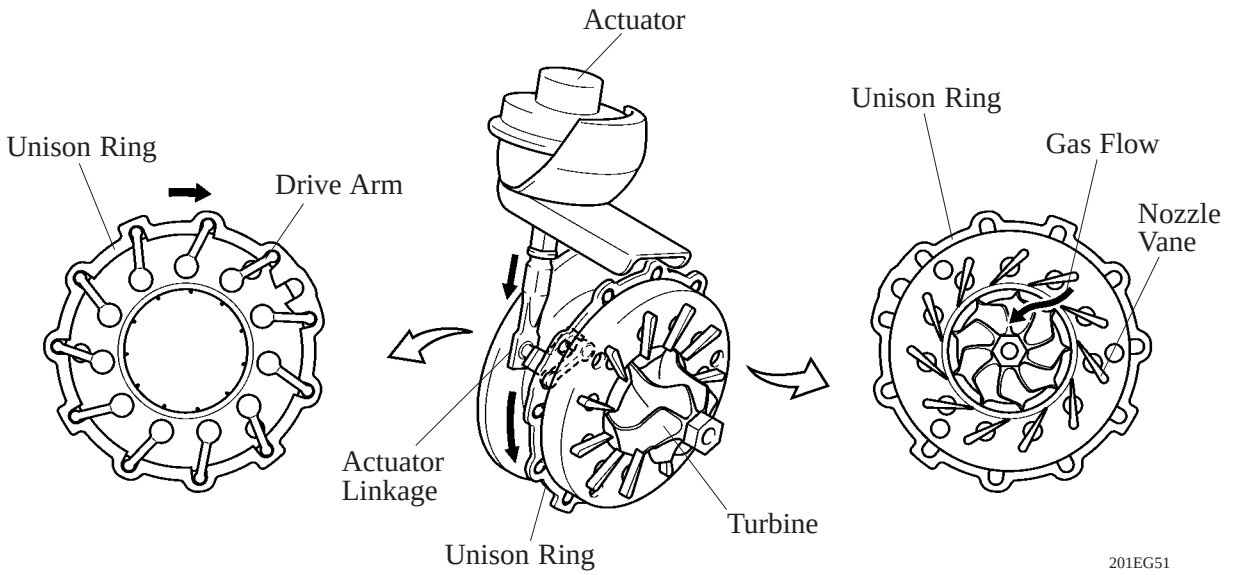

6. Exhaust Pipe

- A ball joint has been adopted in two locations to reduce vibration.
- One of the catalytic converters has been placed directly below the engine and the other under the floor in order to ensure cleaner emissions even at low exhaust gas temperature, in order to comply with the European STEP III regulations.

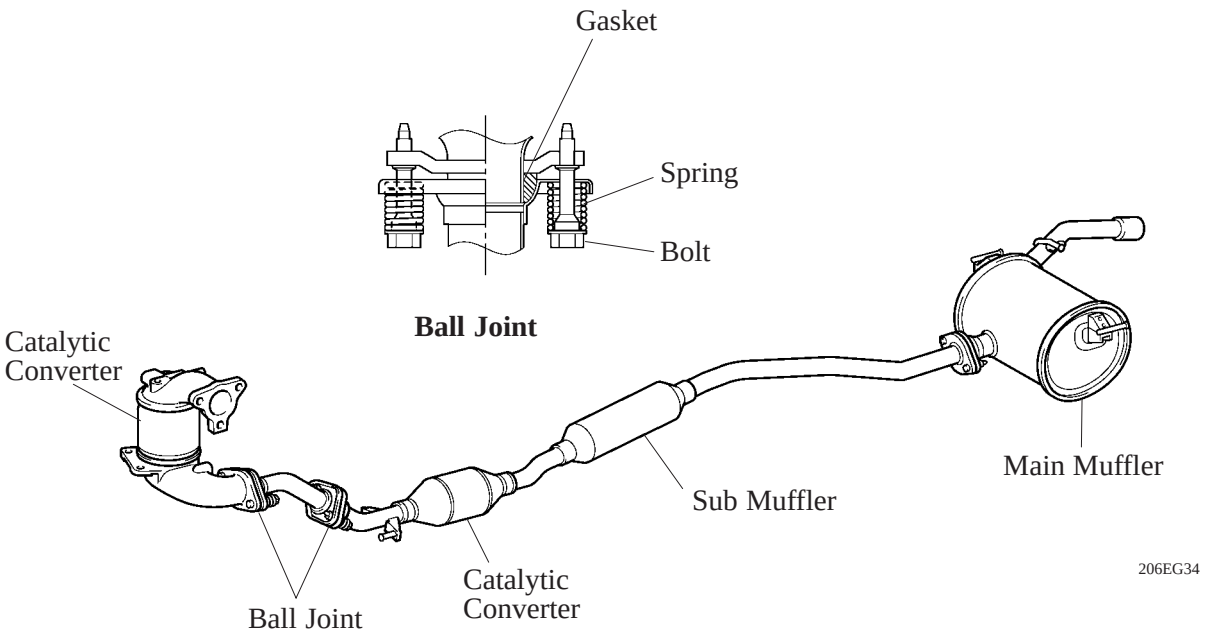

■FUEL SYSTEM

1. General

A common-rail system has been adopted in the fuel injection system. In this system, the highly pressurized fuel that is supplied by the supply pump is stored in the common-rail, and the engine ECU sends signals to the injectors via the EDU (Electronic Driver Unit) in order to control the injection timing and injection volume.

- An electric control type supply pump has been adopted.
- By storing fuel at a high pressure (20 to 135 MPa), the engine peak torque during the pumping of the fuel under high load conditions has been restrained, thus reducing the vibration and noise of the fuel injection system.
- Compact and saving electric injectors are used.

▶ System Diagram ◀

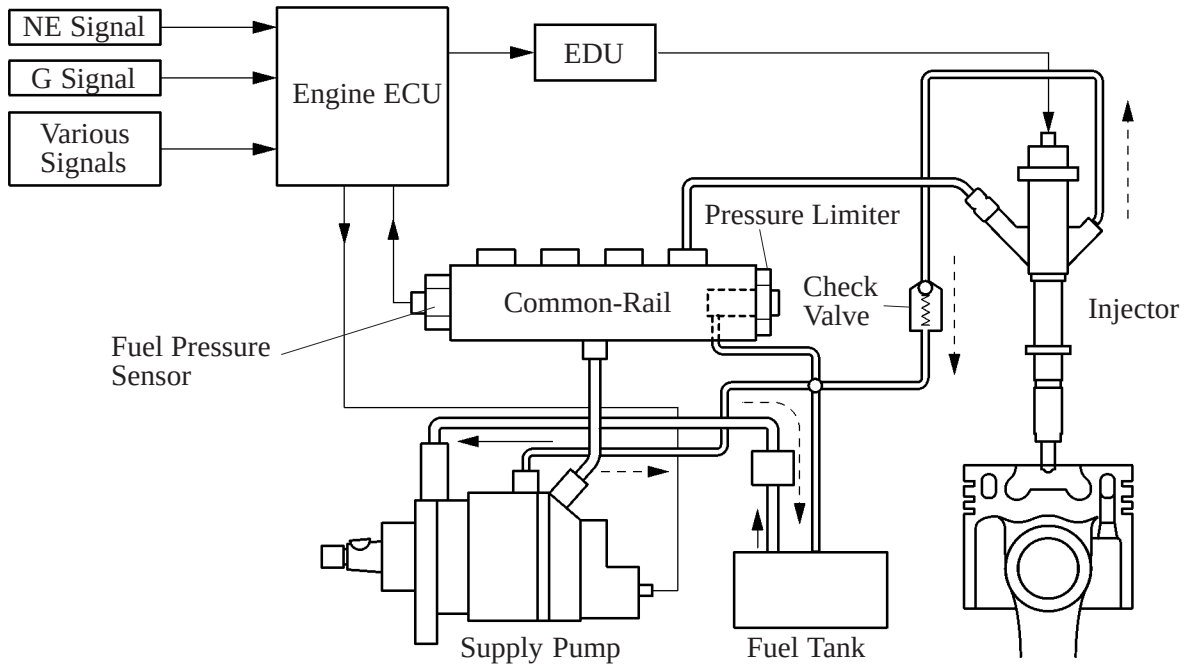

201EG32

2. Supply Pump

General

- The supply pump is a tandem type that have two functions of fuel suction and fuel delivery. This pump achieves both the high-pressure pumping of fuel and the reduction of driving torque fluctuation.
- The supply pump mainly consists of a pump body (inner cam, roller, two plungers), two SCVs (Suction Control Valves), and a feed pump.
  The pump body contains two plungers that are placed in series inside the inner cam: plunger A (horizontal) and plunger B (vertical).

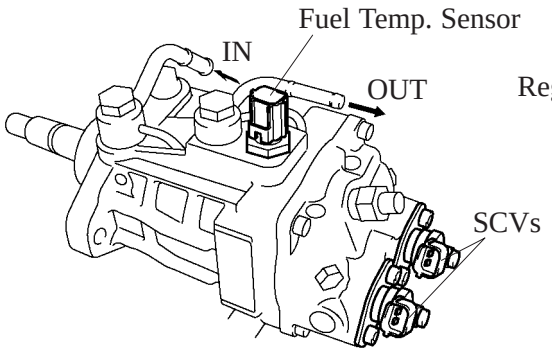

201EG33

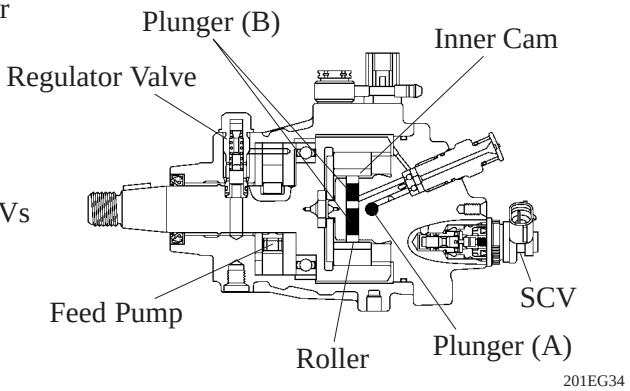

201EG34

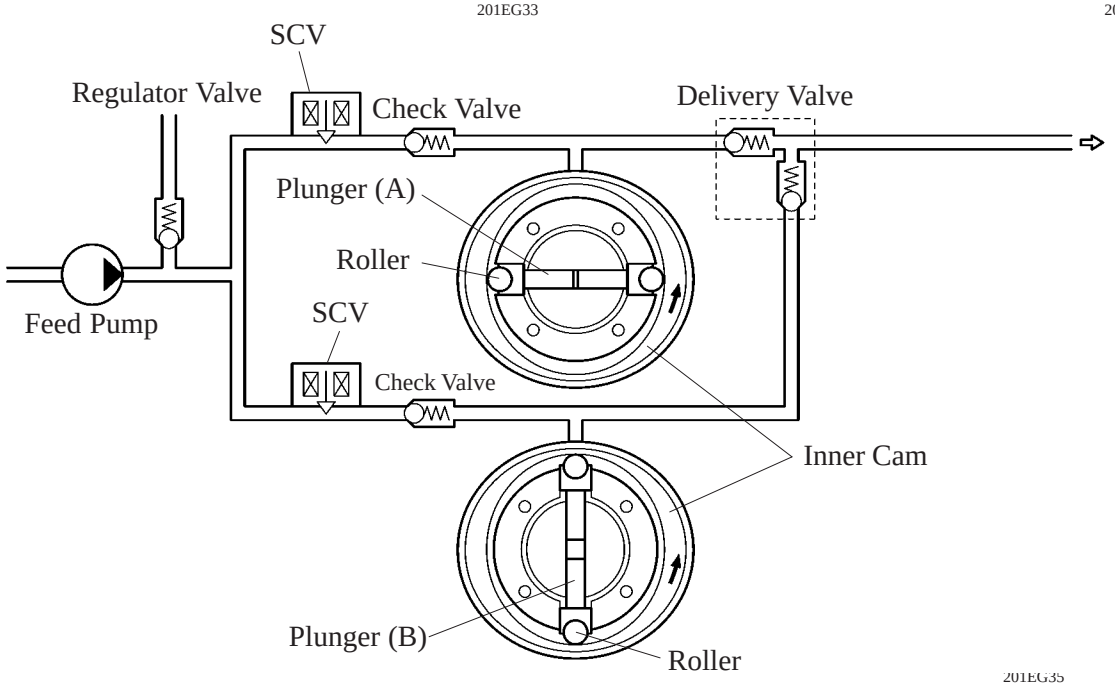

201EG35

Function of Component

Components		Function
Feed Pump		Pumps fuel to two plungers.
Regulator Valve		Regulates fuel pressure in pump.
SCV		Controls volume of fuel drawn in to plungers.
Pump Body	Inner Cam	Drives two plungers.
	Plunger (A, B)	Effects suction and pumping of fuel.
Delivery Valve		Pumps fuel to common-rail.

Operation

- The plunger becomes positioned at the shorter diameter of the inner cam. When the inner cam rotates from this position, the suction stroke starts as the plunger expands with the fuel pressure created by the feed pump.

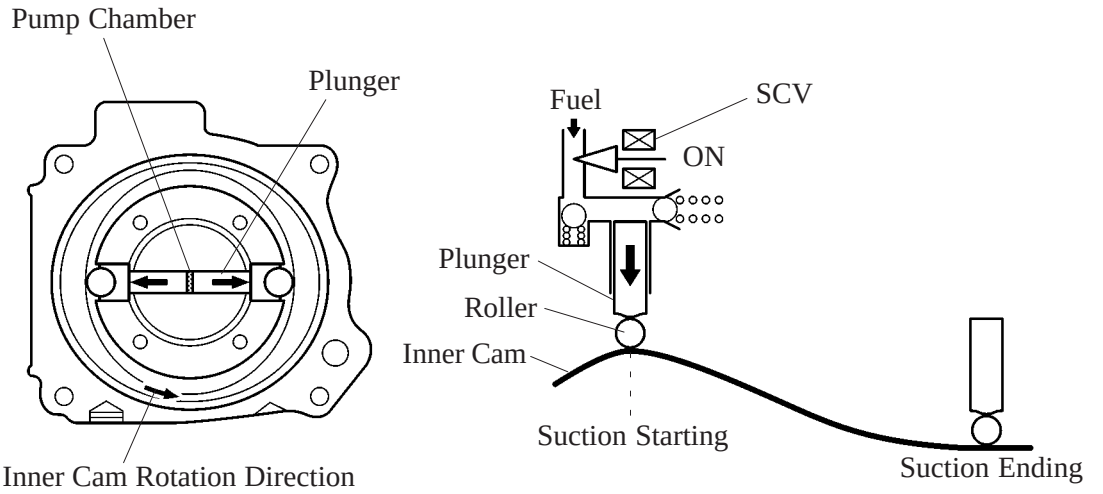

206EG49

- The plunger becomes positioned at the longer diameter of the inner cam. When the inner cam rotates from this position, the pumping stroke starts as plunger is pushed by the inner cam.

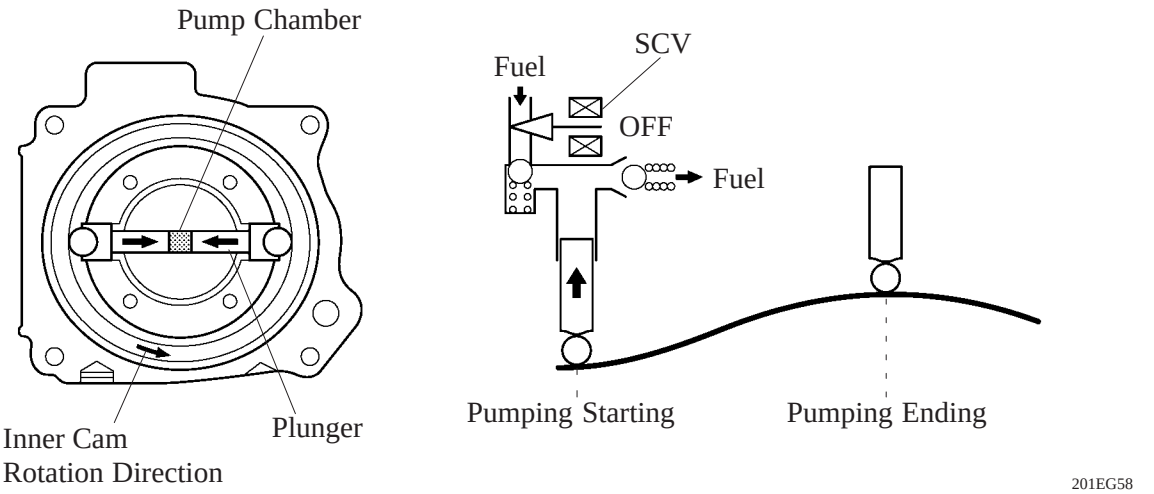

201EG58

- The suction and pumping of fuel is effected by repeating these strokes. However, because the volume of fuel drawn in by the plunger is regulated by the engine ECU via SCV, the plunger stops upon having drawn in the regulated amount of fuel. Thereafter, the inner cam resumes pumping. To regulate the volume of fuel drawn in by the plunger, the engine ECU calculates the target common-rail pressure in accordance with the vehicle driving conditions and controls the SCV so that the target value is achieved by the output of the fuel pressure sensor.

3. Common-Rail

- The fuel pressure sensor calculates the fuel pressure and outputs the resultant signal to the engine ECU.
- When the help pressure in the common-rail is abnormally high, the pressure limiter leaks the fuel to the fuel tank to reduce pressure.

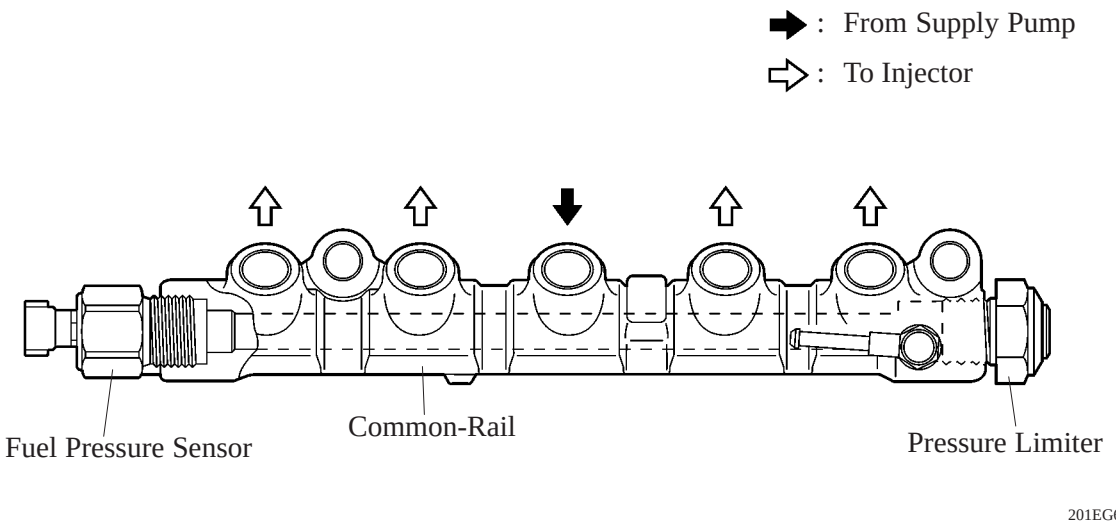

Service Tip

- Fuel pressure sensor has its sealing portion plastic-deformed in order to keep sealing performance, so do not reuse it after disassembling.
- Do not disassemble the pressure limiter because its operating pressure has been adjusted at manufacture.
- If parts that affect the alignment has been changed, make sure to replace the pipe with a new one as well. The parts that require the replacement of a pipe are listed below.

  Injection Pipe: Injector, Common-Rail, Cylinder Head

  Fuel Inlet Pipe: Supply Pump, Common-Rail, Cylinder Block, Water Pump, Cylinder Head

For details, refer to the 1CD-FTV Engine Repair Manual (Pub. No. RM866E)

4. Injector

General

An injector consists of a nozzle needle, piston, and solenoid valve.

▶ **Specification** ◀

Injection Hole	6
Injection Pressure	135 MPa (1377 kgf/cm^2)

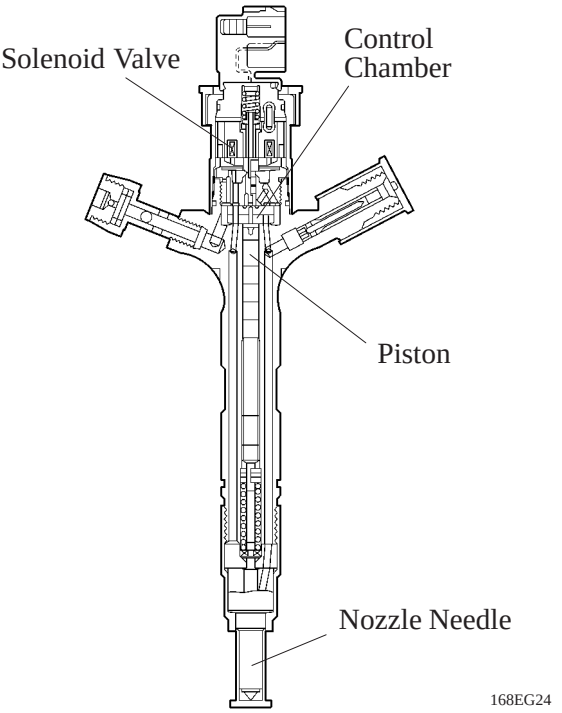

Operation

(a) When electrical current is applied to the solenoid coil, it pulls the solenoid valve up.

(b) The orifice of the control chamber opens, allowing the fuel to flow out.

(c) The fuel pressure in the control chamber drops.

(d) Simultaneously, fuel flows from the orifice to the bottom of the piston and raises the piston up (to enhance response).

(e) As a result, the piston raises the nozzle needle to inject fuel.

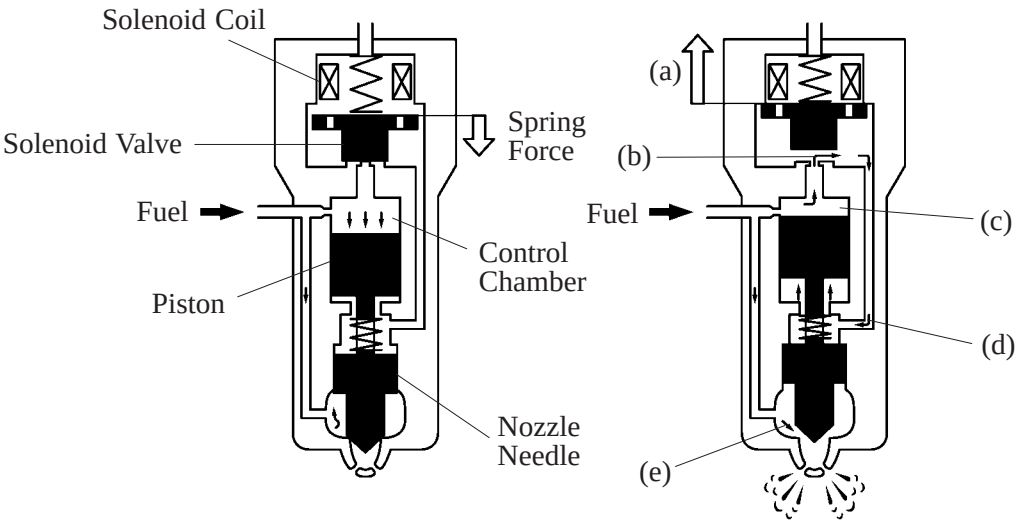

■CHARGING SYSTEM

1. General

- SC (Segment Conductor) alternator has been adopted.
- A one-way clutch function has been provided in the alternator pulley.
- V-ribbed belt has been adopted to alternator drive belt, and automatic tensioner has been adopted to belt tensioner.

2. Alternator

General

- A compact and lightweight SC (Segment Conductor) alternator that generates high voltage output in a highly efficient manner has been adopted.
- A one-way clutch function has been provided in the alternator pulley to absorb the fluctuations in the engine speed, thus significantly reducing the damage sustained by the drive belt.

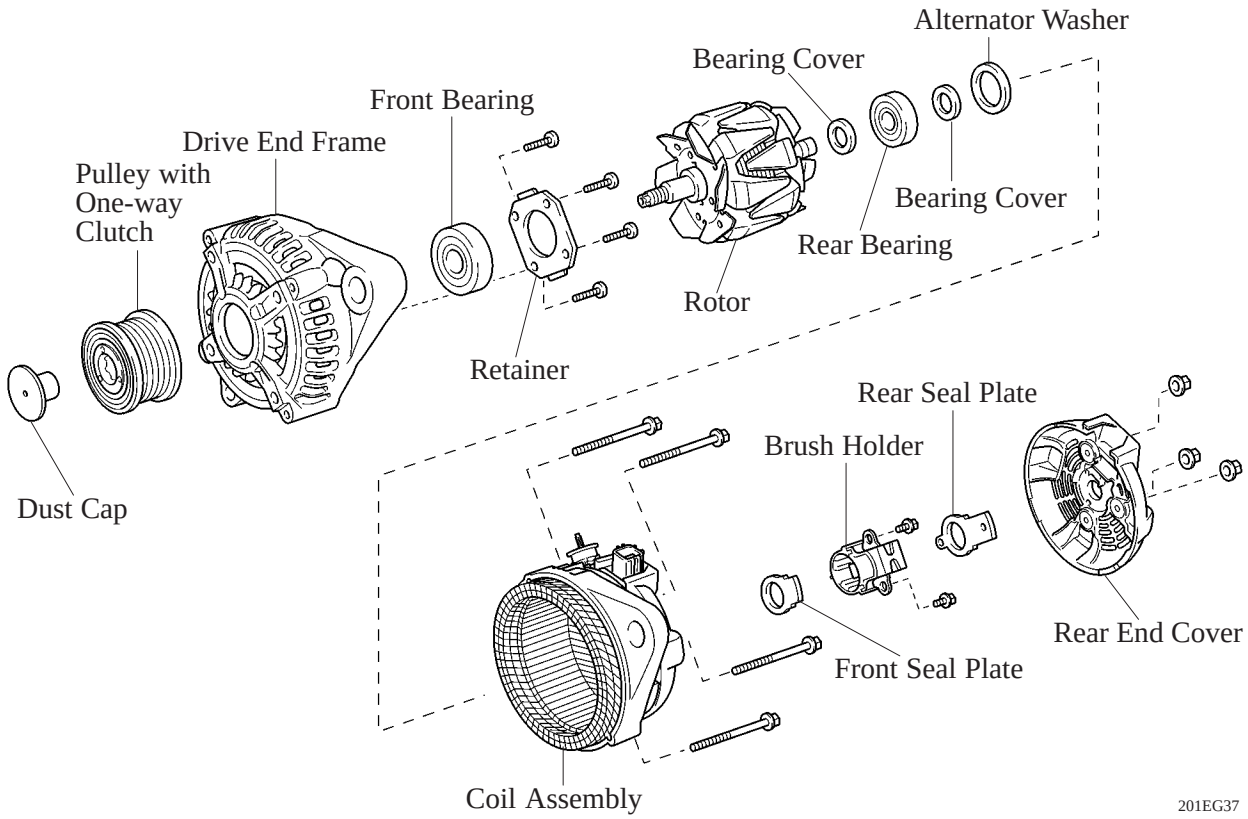

Service Tip

- SST (09820-63020) has been newly established due to the adoption of a pulley with the one-way clutch function.
- Although the charging circuit of a conventional alternator is checked through the F terminal, this check cannot be performed on the SC alternator through the use of the F terminal because the F terminal has been eliminated.

For details, refer to the 1CD-FTV Engine Repair Manual (Pub. No. RM866E).

Wiring Diagram

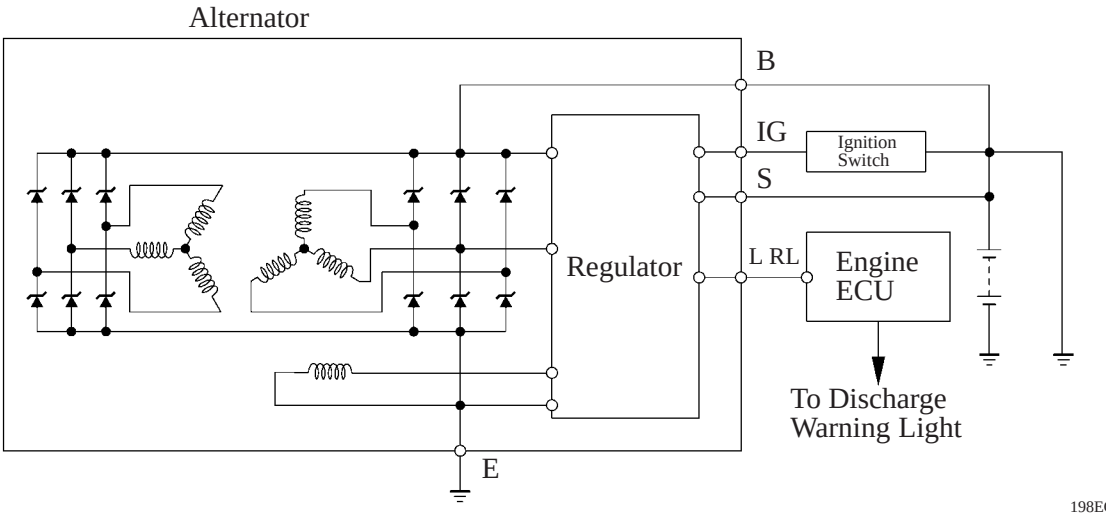

198EG16

Construction and Operation

- This alternator has adopted a joined segment conductor system, in which multiple segment conductors are welded together to form the stator. Compared to the conventional winding system, the electrical resistance is reduced due to the shape of the segment conductors, and their arrangement helps to make the alternator more compact.

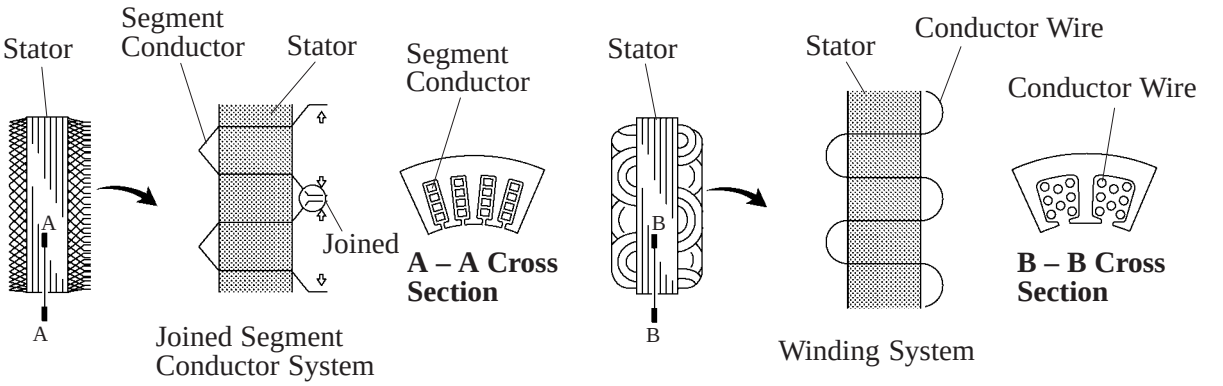

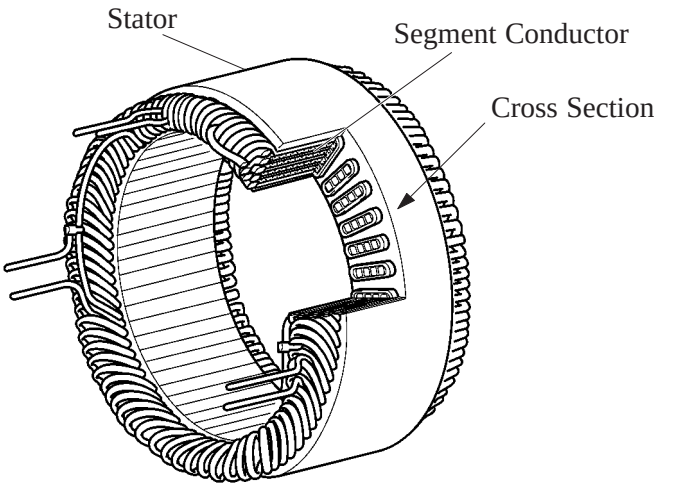

Stator of SC Alternator

206EG42

- A dual winding system has been adopted. This system consists of two sets of three-phase windings whose phases are staggered 30°. Because the magnetic fluctuations of the respective windings cancel each other out, magnetic noise is reduced.

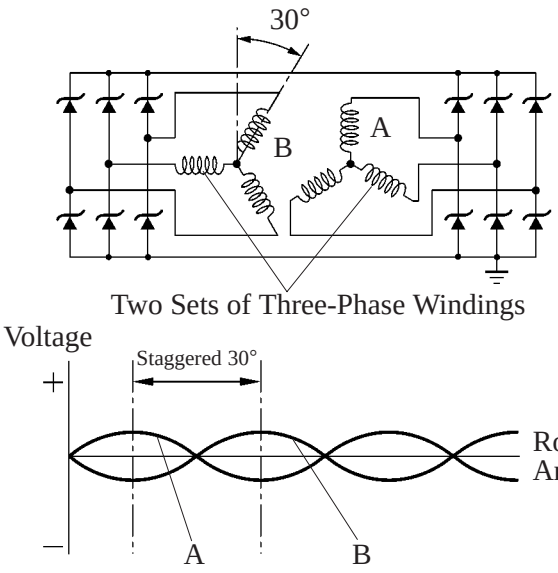

SC Alternator

198EG14

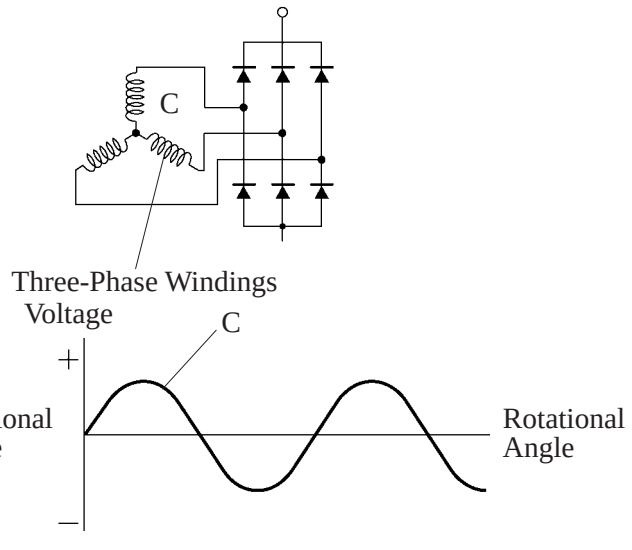

Conventional Type Alternator

198EG15

EG

3. Alternator Drive Belt

An automatic tensioner eliminates the need for tension adjustment.

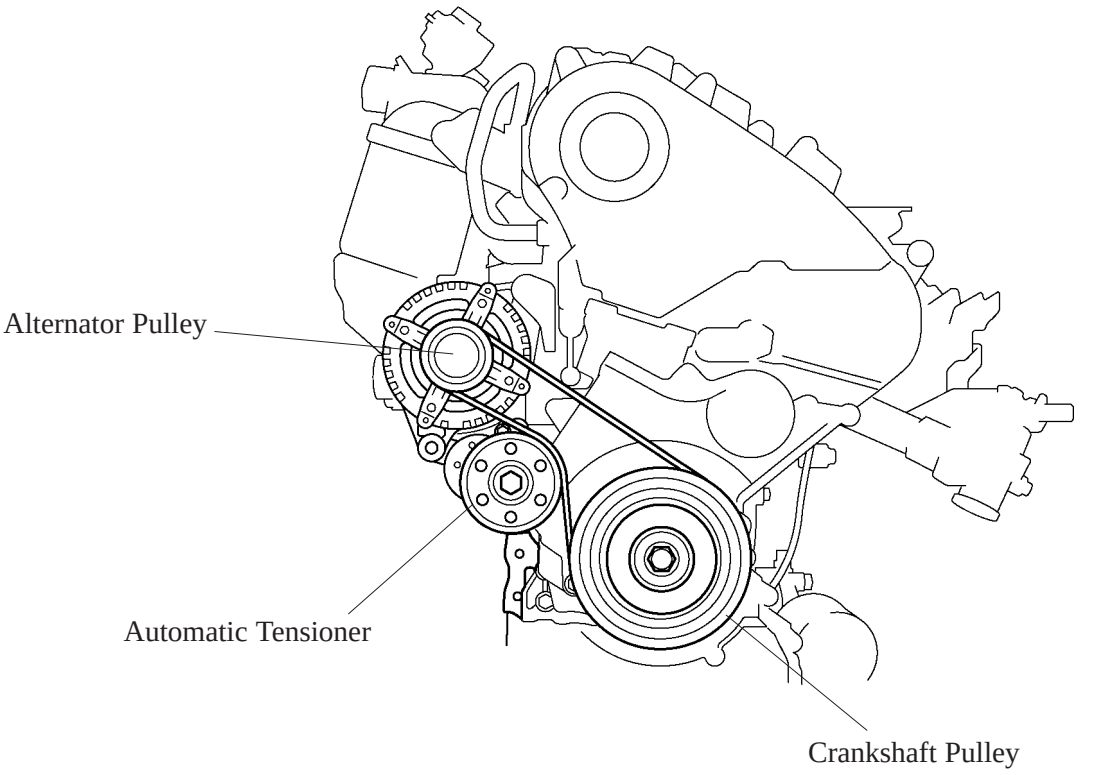

Service Tip

To inspect the drive belt check that the indicator mark is positioned in the indicator range. If not, replace the drive belt.

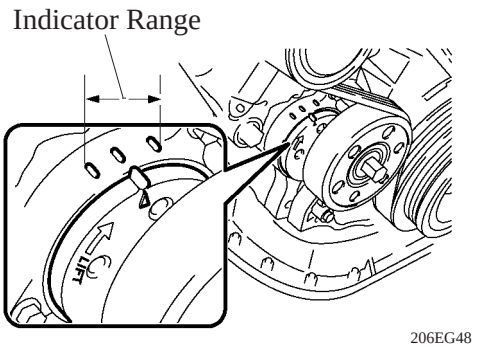

■ENGINE CONTROL SYSTEM

1. General

▶ System Comparison List ◀

System	Outline	Avensis Verso/ Picnic	Avensis	Previa
Fuel Injection Volume Control (See page EG-76)	Based on the signals received from the sensors, the engine ECU determines the fuel injection volume in accordance with the engine condition.	○	○	○
Fuel Injection Timing Control (See page EG-76)	Based on the signals received from the sensors, the engine ECU determines the fuel injection timing in accordance with the engine condition.	○	○	○
Fuel Pressure Control (See page EG-77)	Based on the signals received from the sensors, the engine ECU determines fuel pressure in accordance with engine condition.	○	○	○
Pilot Injection Control (See page EG-77)	Based on the signals received from the sensors, the engine ECU determines pilot injection volume/timing, and interval (between pilot injection and main injection) in accordance with the engine condition.	○	○	○
Idle Speed Control (See page EG-78)	The engine ECU determines the idle speed in accordance with the engine condition, and controls the fuel injection volume in order to maintain the target idle speed.	○	○	○
Glow Plug Control	Controls the length of time when the current is applied to the glow plugs, in accordance with engine coolant temperature.	○	○	○
EGR Control (See page EG-78)	Based on the signals received from the sensors, the engine ECU determines the EGR volume via EGR valve and throttle valve in accordance with the engine condition.	○	○	○
Turbo Pressure Control (See page EG-79)	Based on the signals received from the sensors, the engine ECU controls the actuator via VRV in accordance with the engine condition.	○	—	○
Diesel Throttle Control	Fully close the throttle in order to reduce the vibration when the engine is stopped.	○	○	○
Air Conditioner Cut-off Control*	By controlling the air conditioner compressor ON or OFF in accordance with the engine condition, drivalility is maintained.	○	○	○
Engine Immobiliser	Prohibits fuel injection if an attempt is made to start the engine with an invalid ignition key.	○	○	○
Diagnosis (See page EG-79)	When the engine ECU detects a malfunction, the engine ECU diagnoses and memorizes the failed section.	○	○	○
Fail-safe (See page EG-80)	When the engine ECU detects a malfunction, the engine ECU stops or controls the engine according to the data already stored in the memory.	○	○	○

*: with Air Conditioner System

2. Construction

The configuration of the engine control system in the 1CD-FTV engine is shown in the following chart.

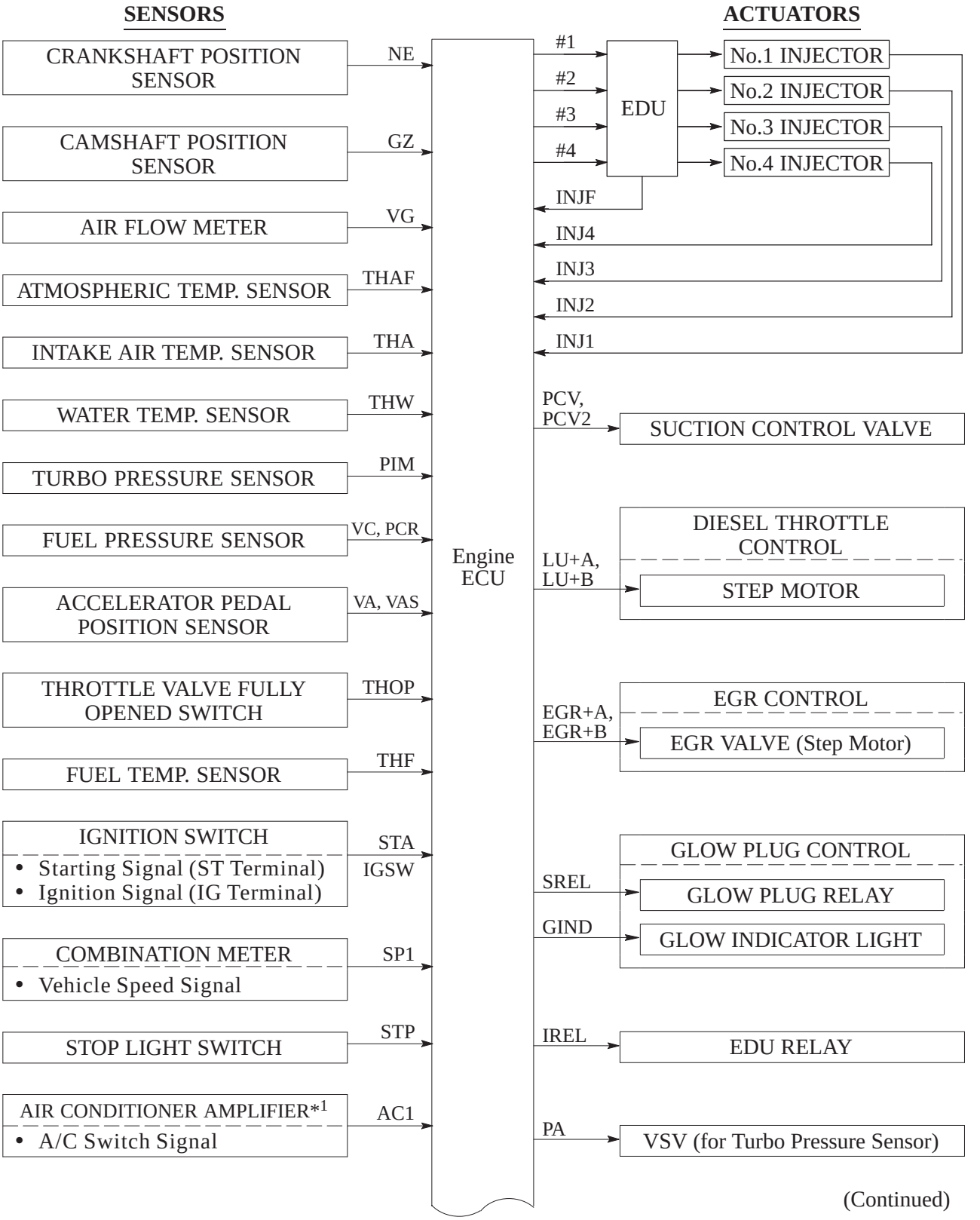

(Continued)

*1: with Air Conditioner System

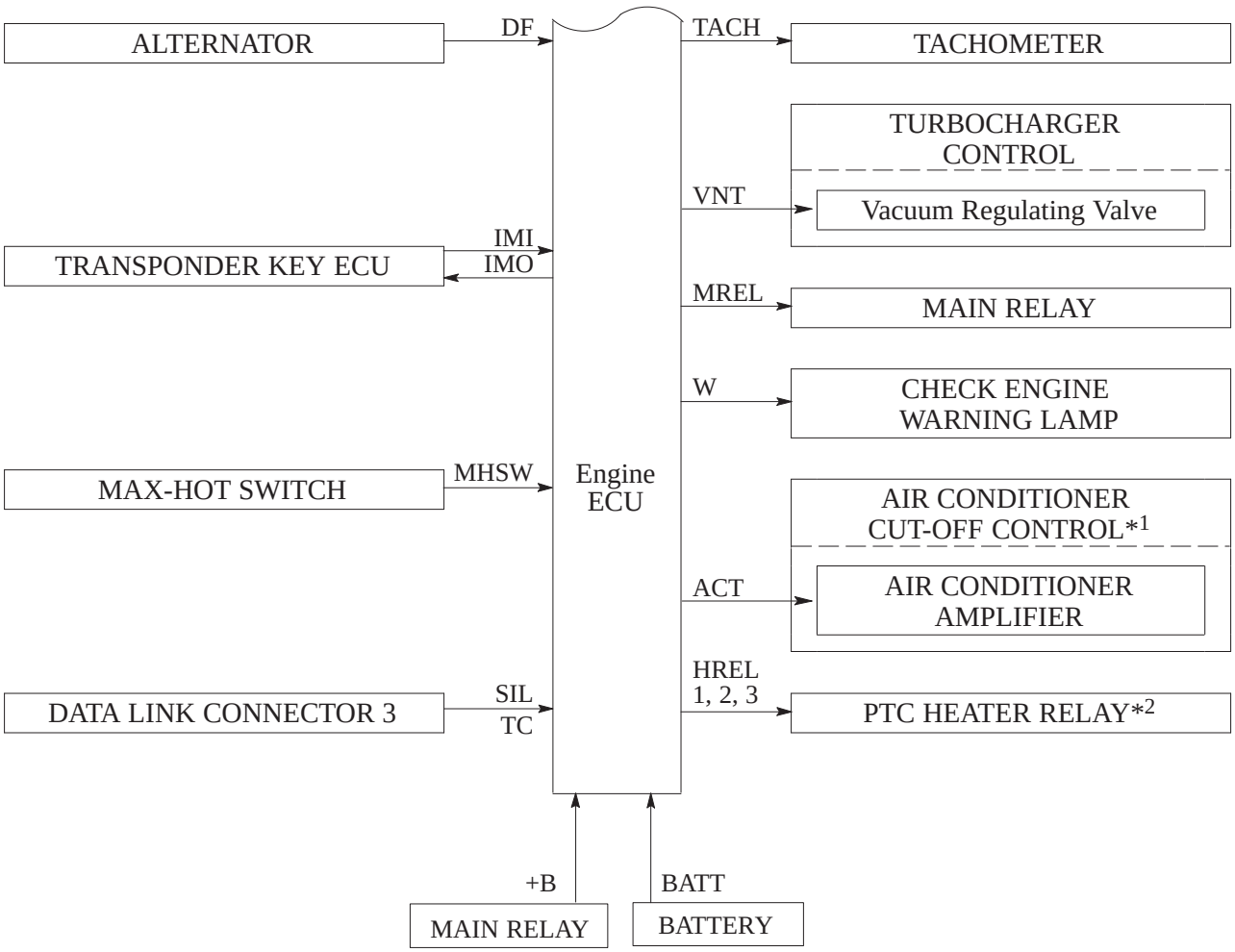

*1: with Air Conditioner System
*2: with PTC Heater

EG

3. Engine Control System Diagram

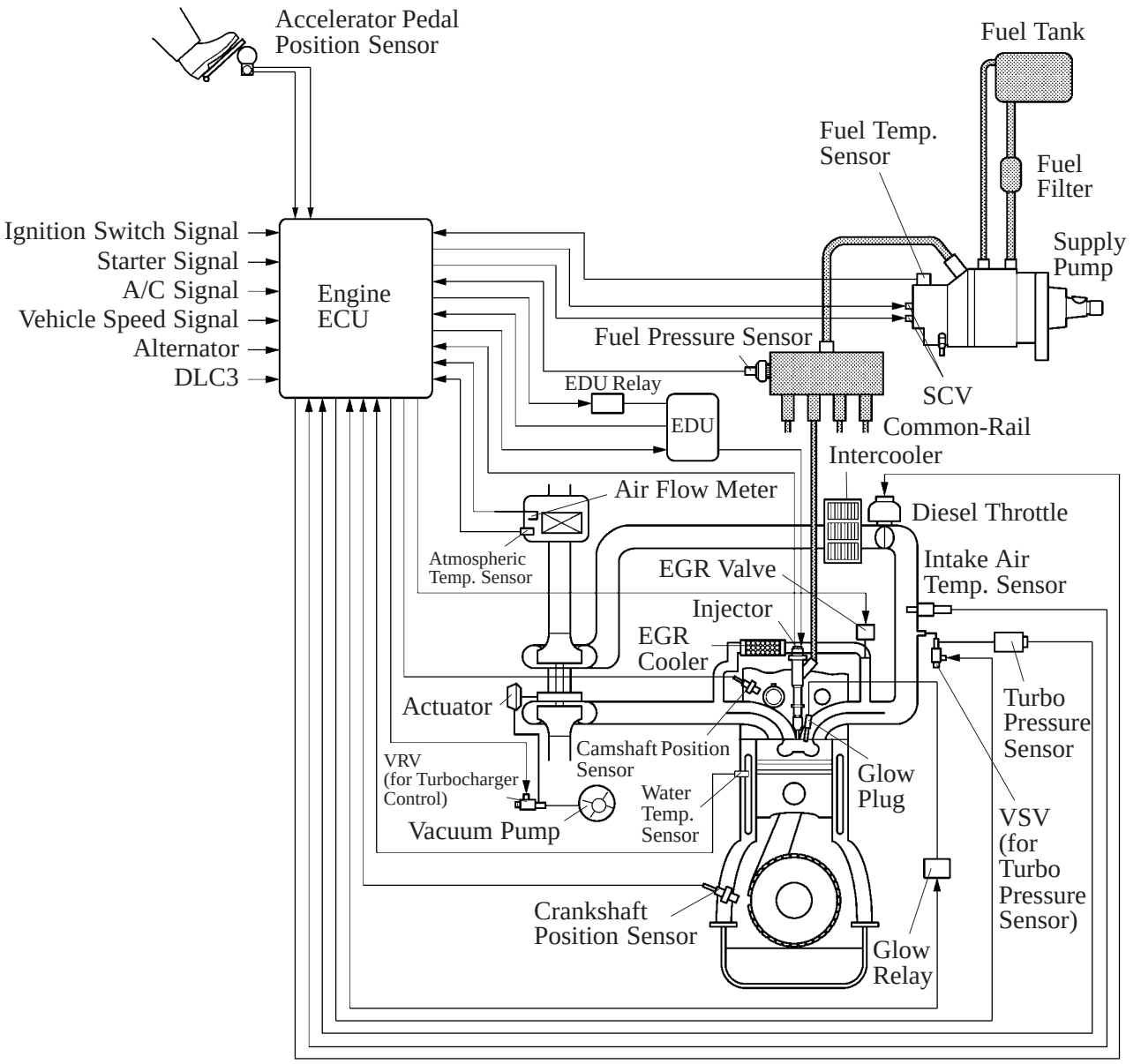

206EG47

4. Layout of Main Components

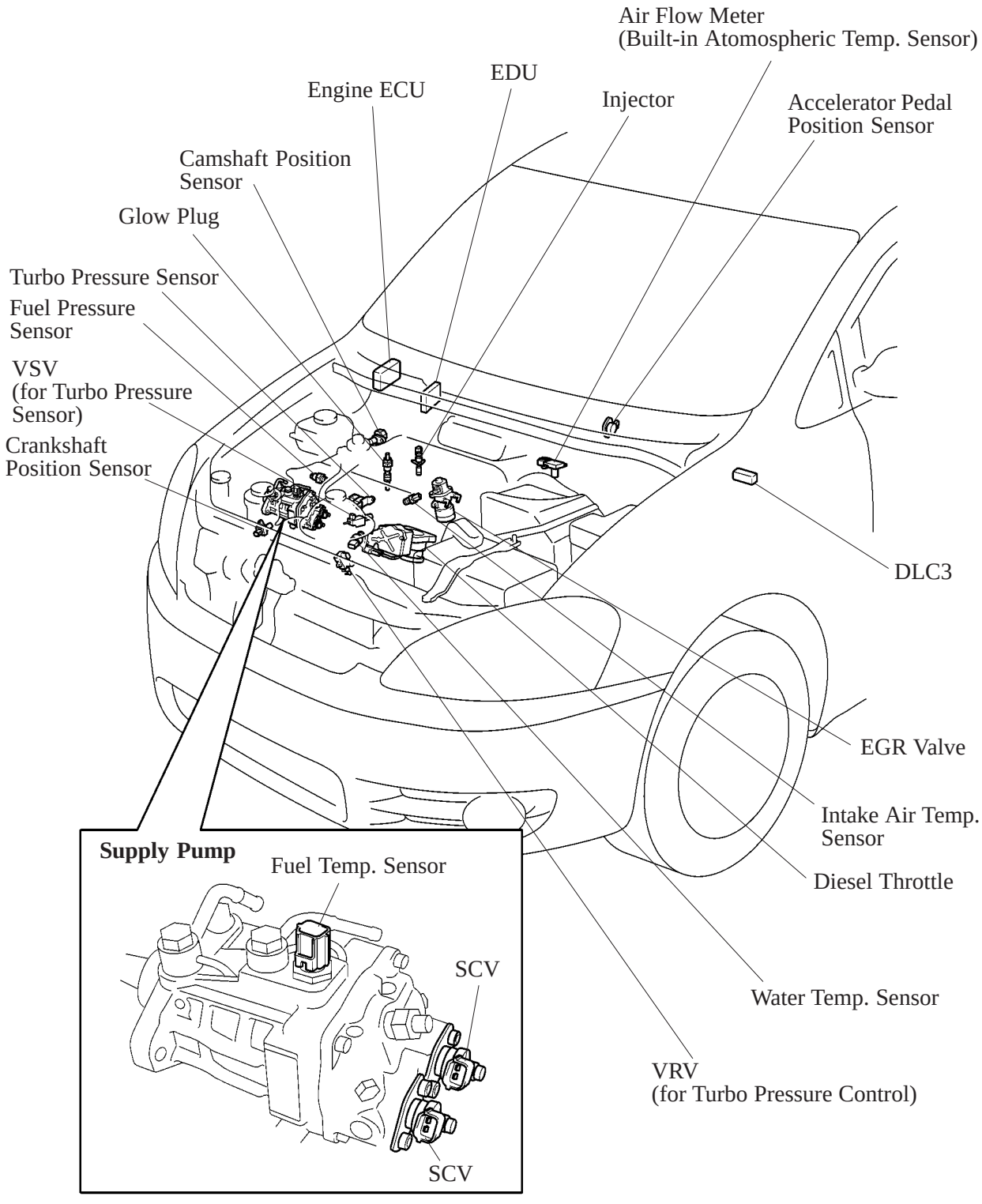

206EG36

EG

5. Main Component of Engine Control System

General

The main components of the 1CD-FTV engine control system are as follows:

Components	Outline	Quantity
Air Flow Meter	Hot-wire Type	1
Crankshaft Position Sensor (Rotor Teeth)	Pick-up Coil Type (36-2)	1
Camshaft Position Sensor (Rotor Teeth)	Pick-up Coil Type (1)	1
Accelerator Pedal Position Sensor	Linear Type	2 (Main, Sub)
EDU	DC/DC Converter	1

— Changes (from Avensis) —

A return bracket has been provided on the accelerator pedal position sensor, and in order to forcefully return the sensor lever to the fully closed position, the accelerator pedal switch has been discontinued.

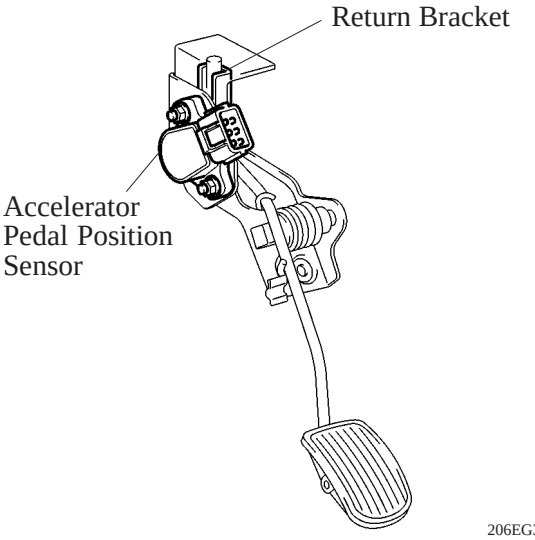

206EG37

Crankshaft Position Sensor

The timing rotor of the crankshaft consists of 34 teeth, with 2 teeth missing. The crankshaft position sensor outputs the crankshaft rotation signals every 10°, and the missing teeth are used to determine the top-dead-center.

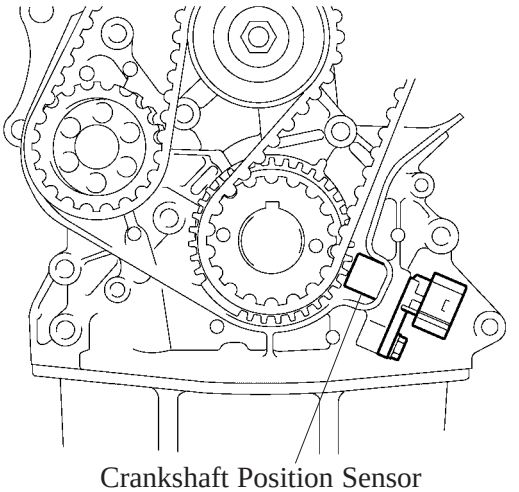

206EG38

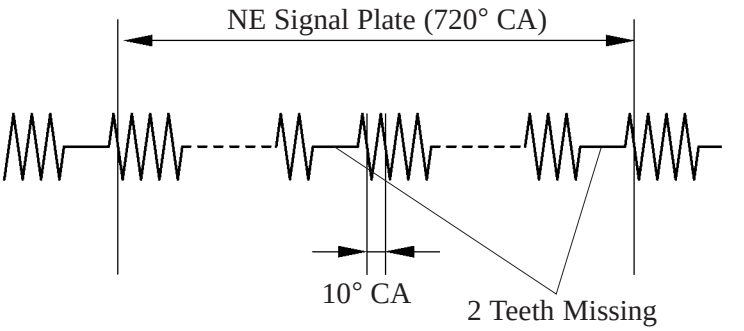

199EG36

Camshaft Position Sensor

To detect the camshaft position, a protrusion that is provided on the timing pulley is used to generate 1 pulse for every 2 revolution of the crankshaft.

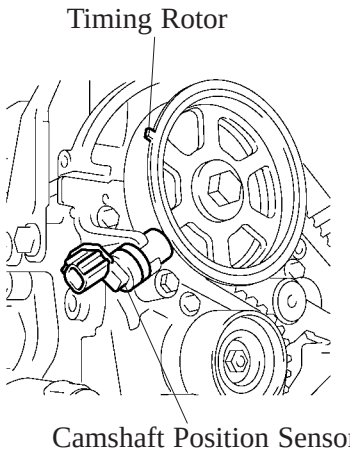

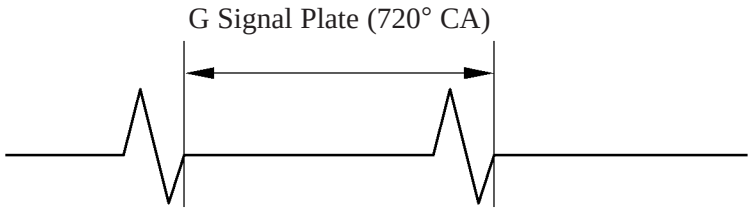

201EG42

Accelerator Pedal Position Sensor

This sensor converts the accelerator pedal depressed angles into electric signals with two differing characteristics and outputs them to the engine ECU. One is the VPA1 signal that linearly outputs the voltage along the entire range of the accelerator pedal depressed angle. The other is the VPA2 signal that outputs on offset voltage.

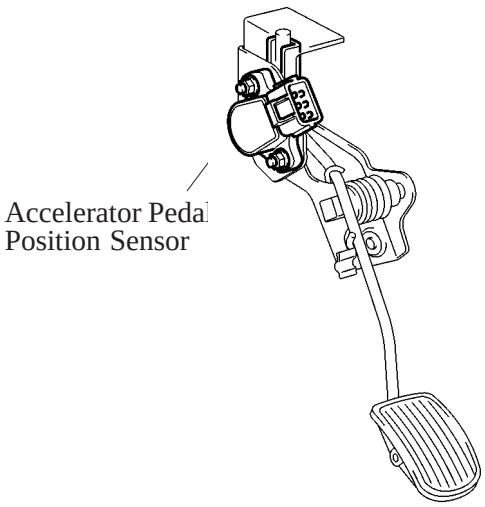

206EG37

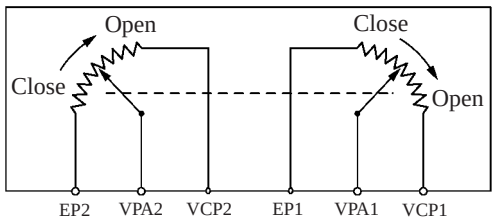

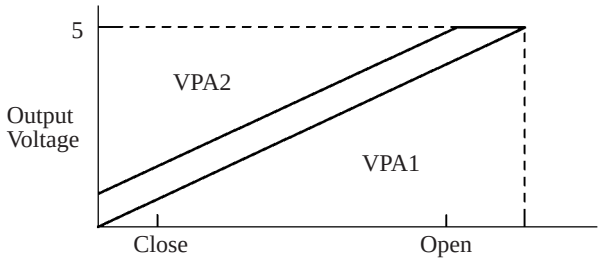

Accelerator Pedal Depressed Angle

199EG40

6. Fuel Injection Volume Control

Fuel injection volume is controlled as shown below.

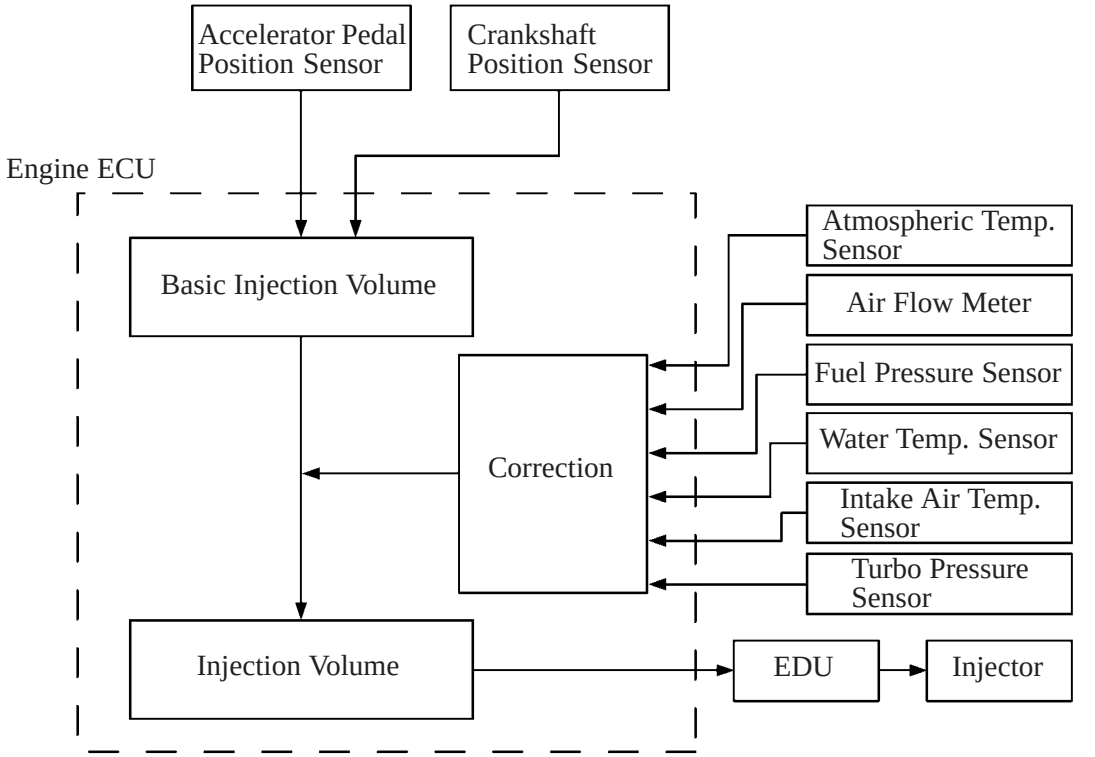

201EG44

7. Fuel Injection Timing Control

Fuel injection timing is controlled as shown below.

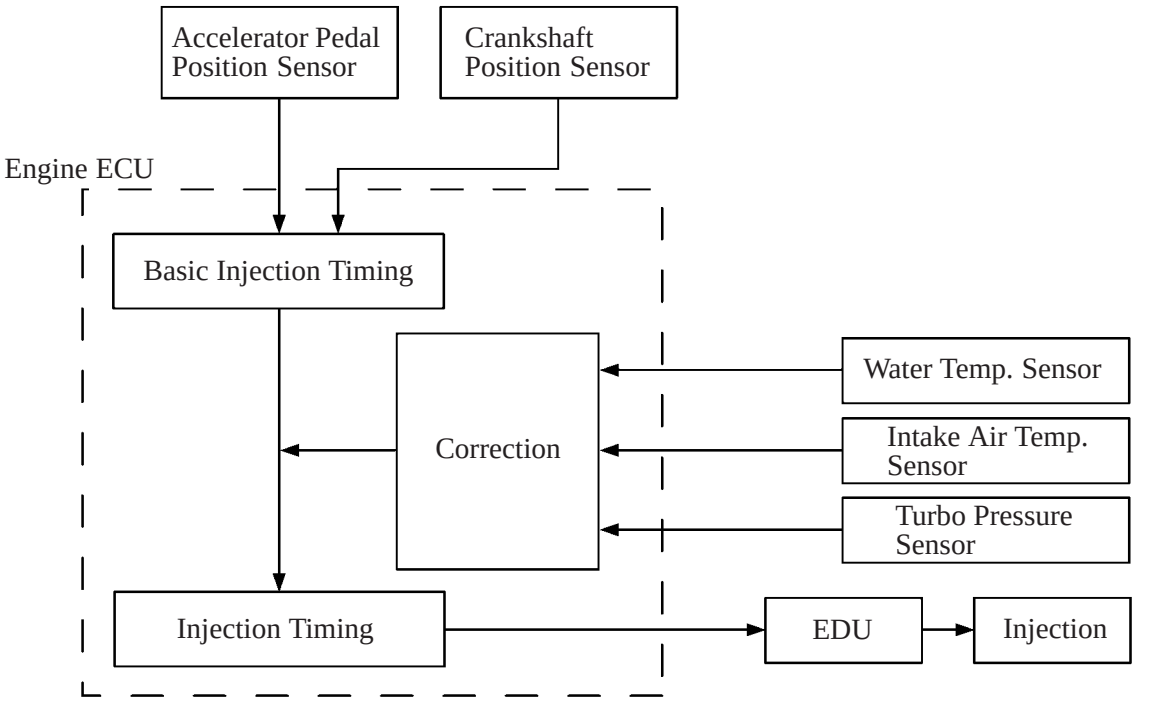

201EG45

8. Fuel Pressure Control

The target injection pressure is calculated based on the signals from the accelerator pedal position sensor and the crankshaft position sensor. To control fuel pressure, signals are sent to the SCV of the supply pump in order to regulate the pumping volume so that the pressure detected by the fuel pressure sensor matches the target injection pressure.

9. Pilot Injection Control

- Pilot injection is a method that provides an auxiliary fuel injection before the main fuel injection takes place. The purpose of pilot injection is to gently start the combustion of the fuel of the main injection in order to reduce vibration and noise.

State	Pilot Injection	Ordinarily Injection
Fuel Injection	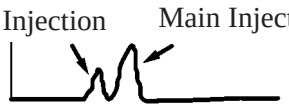	
Combustion Pressure	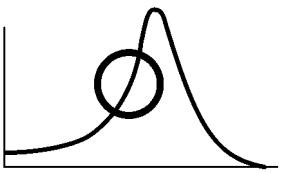	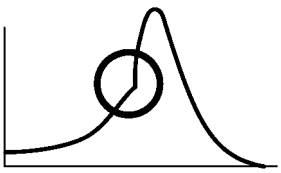

168EG23

- During pilot injection, the pilot injection volume, timing, and interval (between pilot injection and main injection) are controlled as shown below.

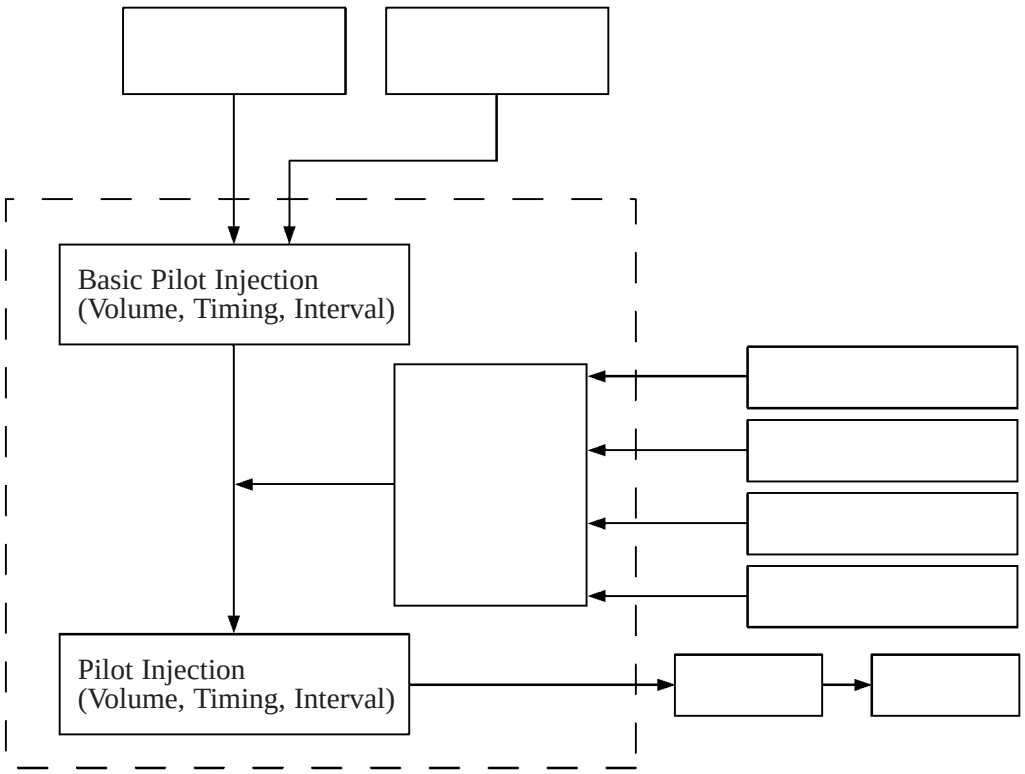

201EG46

10. Idle Speed Control

- In this system, the engine ECU calculates the target engine speed in accordance with the engine condition, and determines the fuel injection volume, thus controlling the idle speed rpm.
- During cold operation, the idle is increased by turning ON the idle up switch, thus improving the heating performance of the heater.

11. EGR Control

By sensing the engine driving conditions, the control unit electrically operates EGR valve and throttle opening position with step motor and the amount of recirculating exhaust gas is regulated.

— Change (from Avensis) —

The VRV (Vacuum Regulating Valve) for EGR and the VSV (for cutoff) have been discontinued.

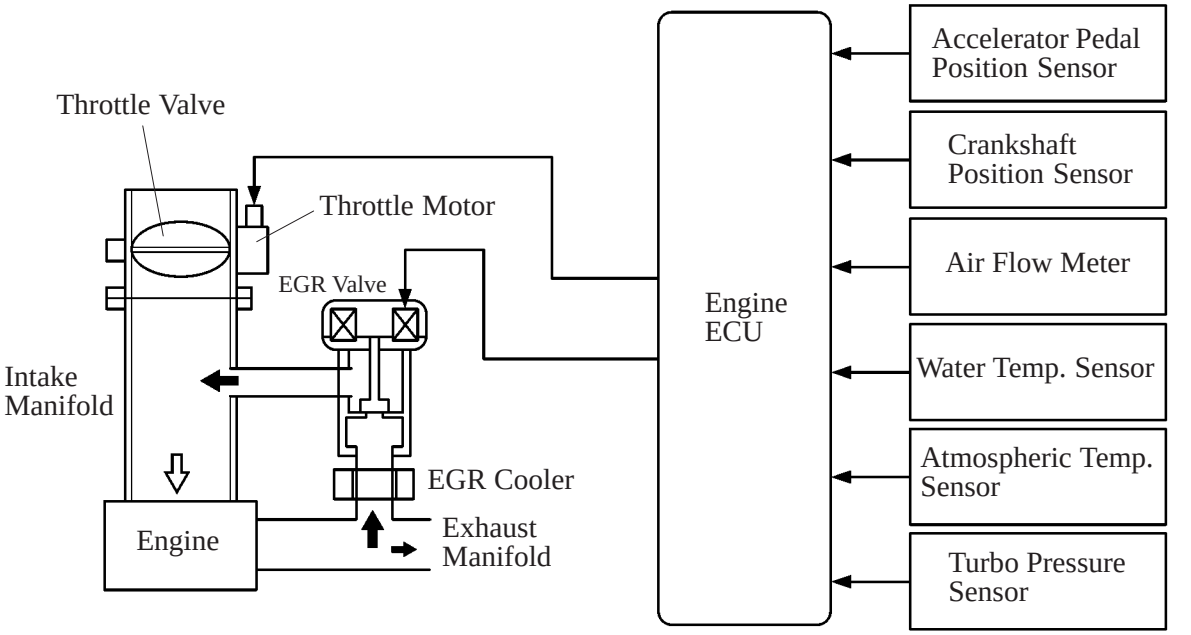

201EG47

12. Turbo Pressure Control

- The turbo pressure (intake manifold pressure) is controlled by the variable nozzle vane located in the turbine area. This nozzle is actuated by the actuator that is directly connected to it. This actuator is actuated by the vacuum pressure that has been regulated by the VRV (Vacuum Regulating Valve) in accordance with the signals from the engine ECU.
- The engine ECU calculates an optimal turbo pressure in accordance with the driving conditions (engine speed, injection volume, atmospheric pressure, and water temperature). It controls the variable nozzle so that the turbo pressure detected by the turbo pressure sensor matches the calculated turbo pressure.
- The turbo pressure sensor detects the atmospheric pressure and the turbo pressure by switching the VSV (Vacuum Switching Valve). This switching is effected by the engine ECU when no fuel is injected during idle or deceleration.

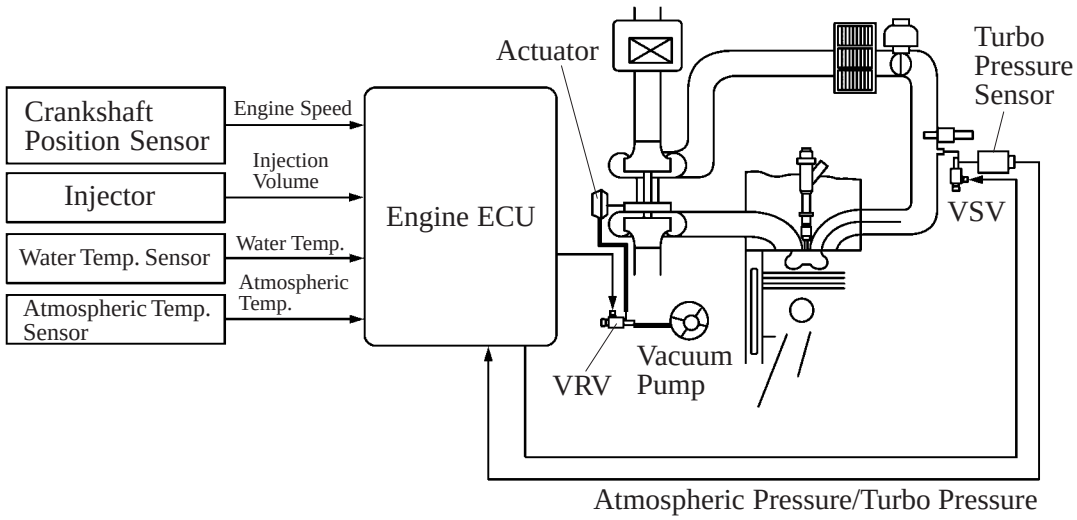

201EG48

13. Diagnosis

When the engine ECU detects a malfunction, the engine ECU makes a diagnosis and memorizes the failed section. Furthermore, check engine warning lamp in the combination meter illuminates or blinks to inform the driver. The engine will also store the DTCs (Diagnosis Trouble Codes) of the malfunctions.
The DTCs can be accessed by connecting the SST (09843-18040) to the DLC3 terminals Tc and CG, and reading the blinking of the check engine warning lamp. They can also be accessed by connecting a hand-held tester.

— Change (from Avensis) —

The DTCs listed below have been added or discontinued.

▶ Added DTC ◀

DTC No.	Detection Item
34 (2)	Turbocharger System Malfunction
34 (3)	Turbocharger Stick Detected (Close)
34 (4)	Turbocharger Stick Detected (Open)
51	Stop Light Switch Malfunction
71	Exhaust Gas Recirculation Control Circuit Malfunction (Open)
89	Interior IC Malfunction

▶ Discontinued DTC ◀

DTC No.	Detection Item
19 (3)	Accelerator Pedal Switch Circuit Malfunction (Short)
19 (4)	Accelerator Pedal Switch Circuit Malfunction (Open)

14. Fail Safe

When the engine ECU detects a malfunction, the engine ECU stops or controls the engine according to the data already stored in the memory.

▶ Fail-Safe Control List ◀

Location of Malfunction	Description of Control
Accelerator Pedal Position Sensor	The accelerator pedal position sensor comprises two (main, sub) circuits. • If a malfunction occurs in either one of the sensor circuits, the engine ECU detects, the abnormal signal voltage difference between these two sensor circuits and switches to the limp mode. In the limp mode, the remaining circuits is used to calculate the injection control, in order to operate the vehicle under limp mode control. • If both systems malfunction, the engine ECU considers that the accelerator pedal is fully closed.
Water Temp. Sensor	In case of a signal malfunction, the engine ECU fixes the uses the constant values of 120°C (248.0°F) water temperature to perform the calculation. However, in case that the fuel temperature is less than 15°C (59.0°F), a fuel temperature sensor controls as a substitute for a water temperature sensor.
Intake Air Temp. Sensor	In case of a signal malfunction, the engine ECU fixes the uses the constant values of 90°C (194.0°F) intake air temperature to perform the calculation.
Fuel Temp. Sensor	In case of a signal malfunction, the engine ECU fixes the uses the constant values of 40°C (104.0°F) fuel temperature to perform the calculation.
Turbo Pressure Sensor	In case of a signal malfunction, the engine ECU calculates the injection volume limited by the turbo pressure fixed value and continues effecting injection control.

EXTERIOR APPEARANCE



Europe Models

206IN01



Europe Models

206IN02

CONCEPT

A minivan that sets a new standard for the new century.
Introducing the Avensis Verso / Picnic.
Any way you look at it, a class above.

A new incarnation of the Avensis Verso/Picnic…one that offers the performance and quality of a class above.
Starting with a firmed-up sporty design, it also boasts an easy-to-drive body size and excellent riding comfort.
In addition, the comfortable cabin is filled with creative ideas that everyone can use, from the front seat walk-through* and multi-functional rear seats to the many practical storage spaces.

*: Except M/T Models



206IN01

Europe Models

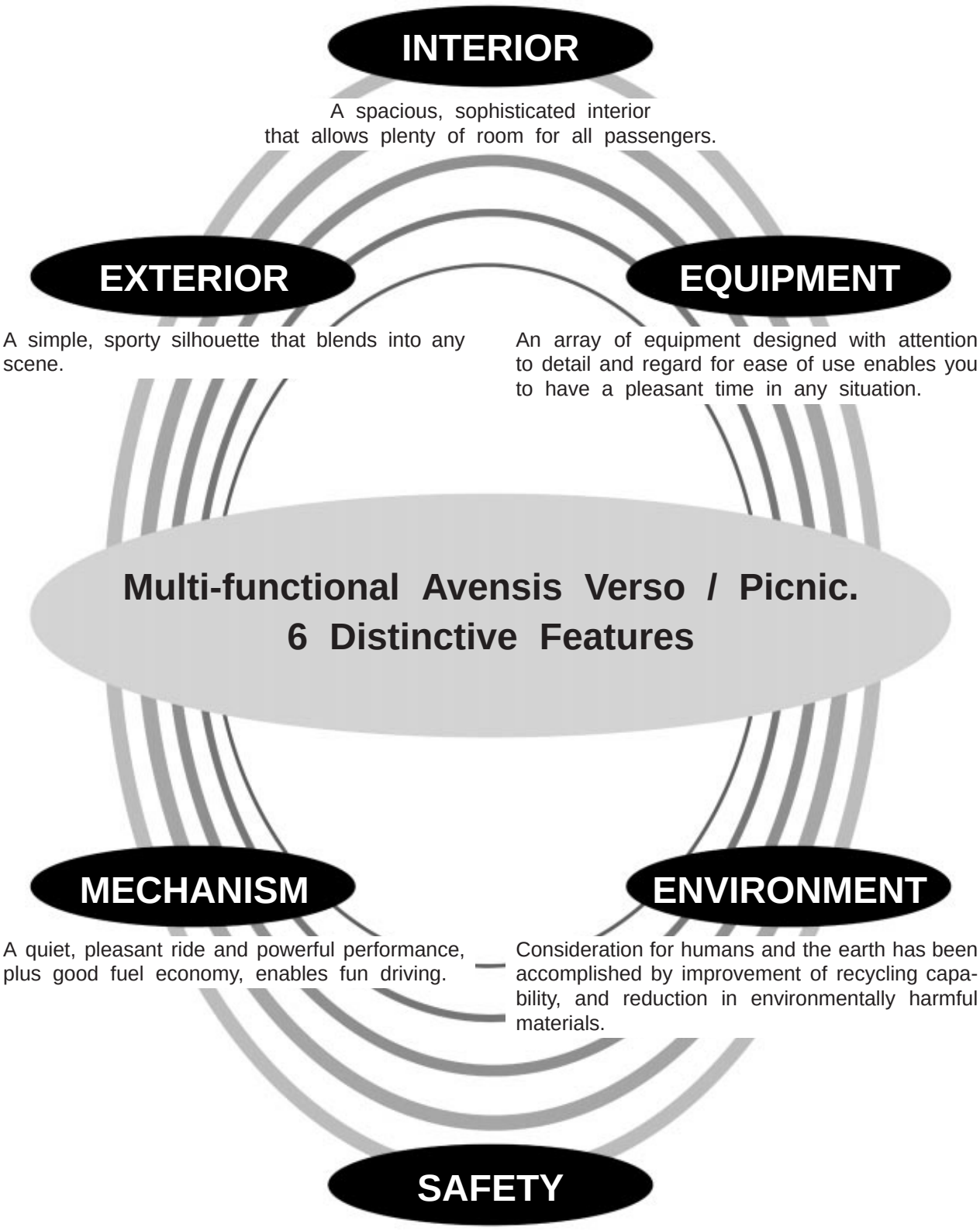
INTERIOR
A spacious, sophisticated interior that allows plenty of room for all passengers.
EXTERIOR
A simple, sporty silhouette that blends into any scene.
EQUIPMENT
An array of equipment designed with attention to detail and regard for ease of use enables you to have a pleasant time in any situation.
Multi-functional Avensis Verso / Picnic.
6 Distinctive Features
MECHANISM
A quiet, pleasant ride and powerful performance, plus good fuel economy, enables fun driving.
ENVIRONMENT
Consideration for humans and the earth has been accomplished by improvement of recycling capability, and reduction in environmentally harmful materials.
SAFETY
Safety design and features aimed at minimizing risk.
Consideration for safety can be seen throughout the vehicle.

EXTERIOR

A simple, sporty silhouette that blends into any scene.

Front View

A front design with a rounded hood that gives an appearance of solidity.

- The multi-reflector type high beam and low beam headlights, clearance light, and turn signal light have been integrated, expressing a feeling of quality and power.
- The radiator grille is the same color as the exterior paint, giving a sense of integration with the body.
- A sense of sophistication is conveyed by the plating around the radiator grille.



206MO01



206MO04

Rear View

A rear design with a rounded, stable feeling.

- The refined rear design has been interpreted with rear combination lights that continue from the side to the back door.
- The plated license plate garnish evokes a sense of luxury.
- The large rear bumper, painted to match the body, impresses with a sense of power and stability.



Europe Models

206MO02

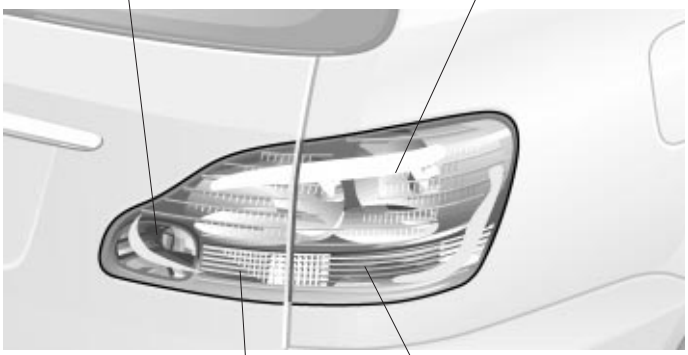

206MO05

EXTERIOR

Side View

The smooth roof line, while compact, seems elegantly elongated.

- The rounded body side projects an image of stability and stateliness.
- The wide expanse of glass provides the side window with a feeling of openness, while assuring an optimum field of vision.
- The thick rear quarter pillar presents an appearance of strength and stability.
- The plated side protection molding conveys a sense of luxury.

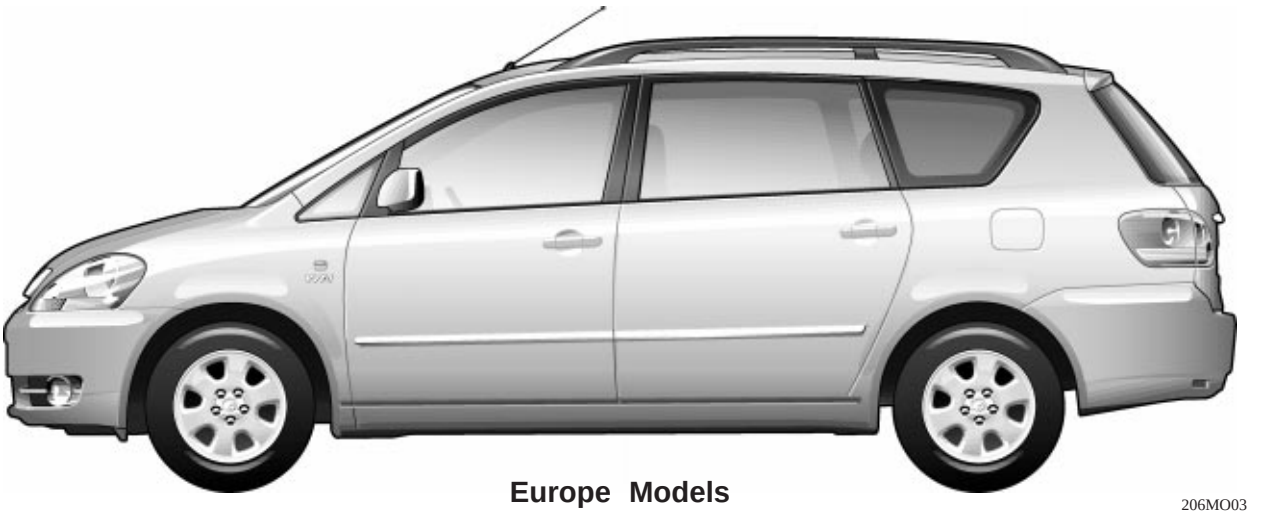

Europe Models

206MO03

Tire & Disc Wheel

You can choose from an array of tire and disc wheel variations.

Provided	Standard	Option	Option
Tire Size	205 / 65 R 15	205 / 65 R 15	205 / 60 R 16
Disc Wheel Size	15 × 6 1/2 JJ	15 × 6 1/2 JJ	16 × 6 1/2 JJ
P.C.D.* [mm]	114.3	114.3	114.3
Off Set [mm]	45	45	45
Design	Wheel Cap 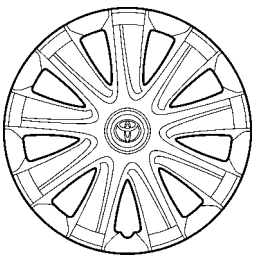 206MO08	Aluminum Wheel 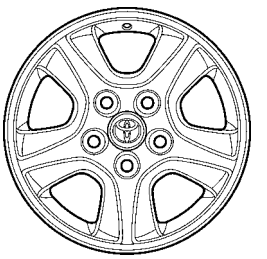 206MO06	Aluminum Wheel 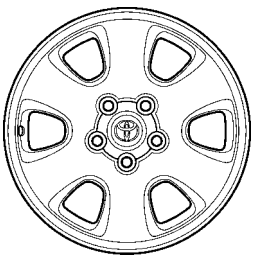 206MO07

*: Pitch Circle Diameter

INTERIOR

A spacious, sophisticated interior that allows plenty of room for all passengers.

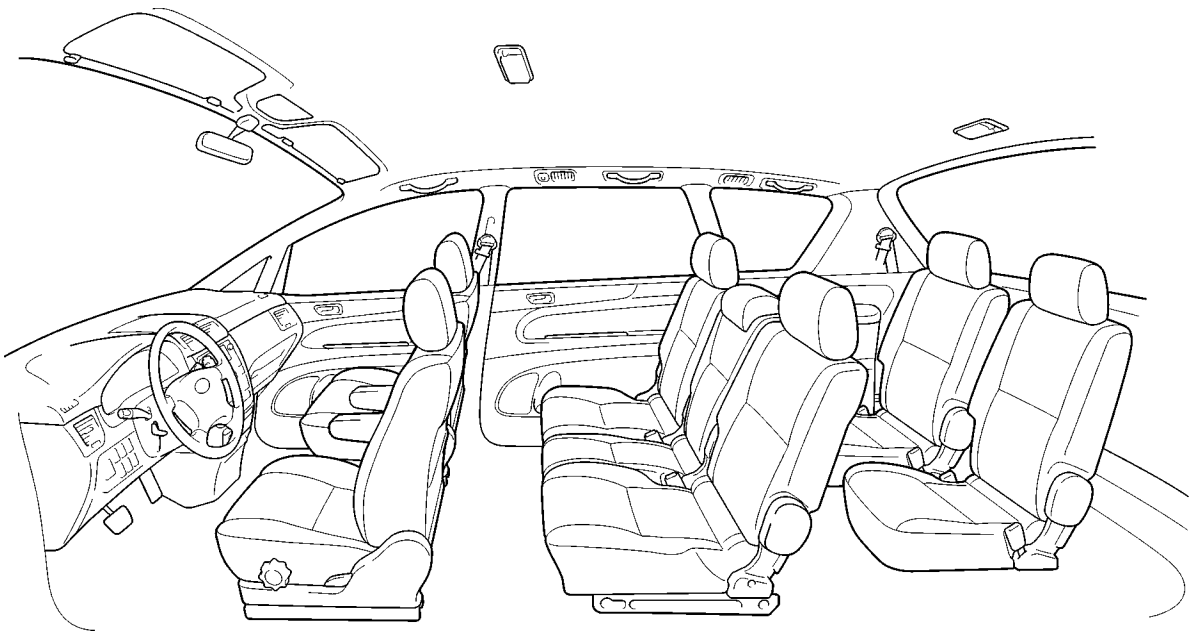

Europe Models

206MO09

Instrument Panel

An instrument panel designed for quality and ease of use.

The upper and lower portions of the instrument panel have been designed with a two-tone color scheme. This, in addition to the titanium-color or wood grain panels on the side and center registers, evokes a sense of luxury.

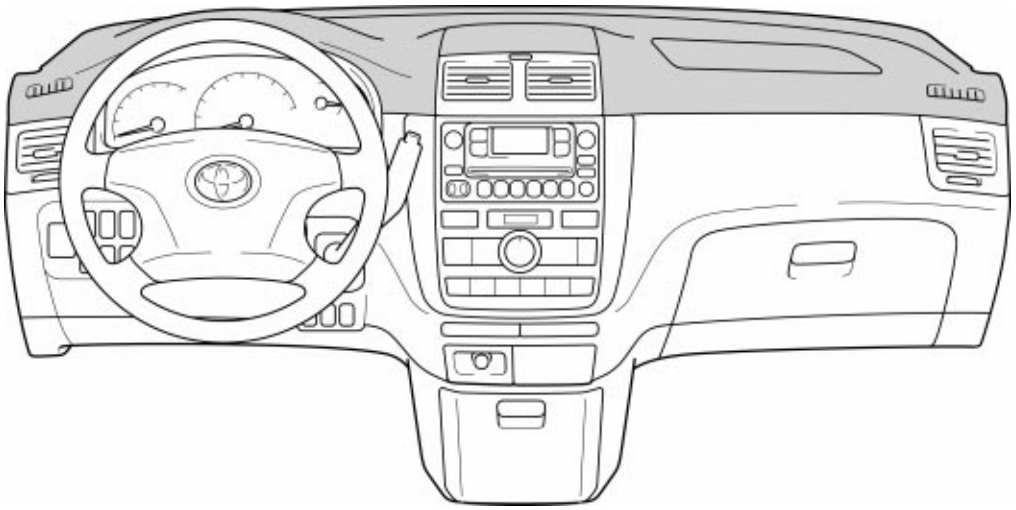

206MO10

INTERIOR

Steering Wheel

A four-spoke steering wheel is standard equipment.

A sporty leather four-spoke steering wheel is also provided as an option.



206MO43

Automatic Transaxle Shift Lever

An easy to operate up-and-down A/T shift lever has been adopted.

- The up-and-down A/T shift lever has been adopted and is located on the steering column.
- The M/T models have a floor shift type shift lever.

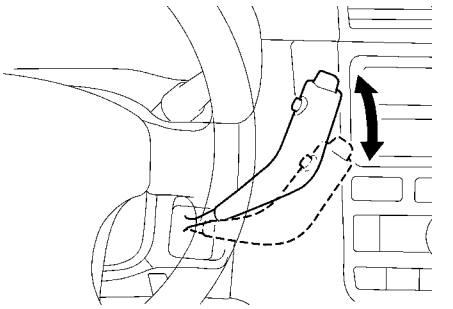

LHD Model

206MO44

Combination Meter

The three-eye graphic meter is easy to see and read.

- LEDs (Light Emitting Diodes) have been adopted for all meters, gauges, indicator lights, and warning lights, resulting in excellent visibility.
- The odometer and tripmeter use an LCD (Liquid Crystal Display).
- The conventional water temperature gauge has been discontinued, and in its place, a water temperature indicator light has been adopted. If the water temperature falls below approximately 50°C, a blue indicator light illuminate. If the water temperature rises above approximately 117°C, an LED flashes.

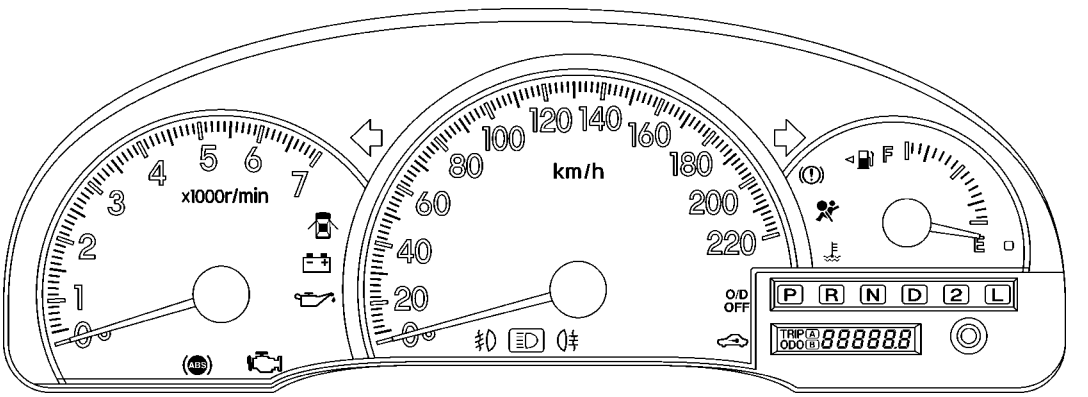

206MO11

Europe LHD A/T Models

Storage Space

Storage space designed with this thought in mind: “Wouldn’t be nice if there was …?”
Anything, small or large, can be stored in the various storage spaces provided. This ease of use is an attractive feature.

Front

(1) Auxiliary Box
(2) Glove Box
(3) Cup Holder
(4) Grocery Bag Hook (RHD Models Only, Passenger Side)

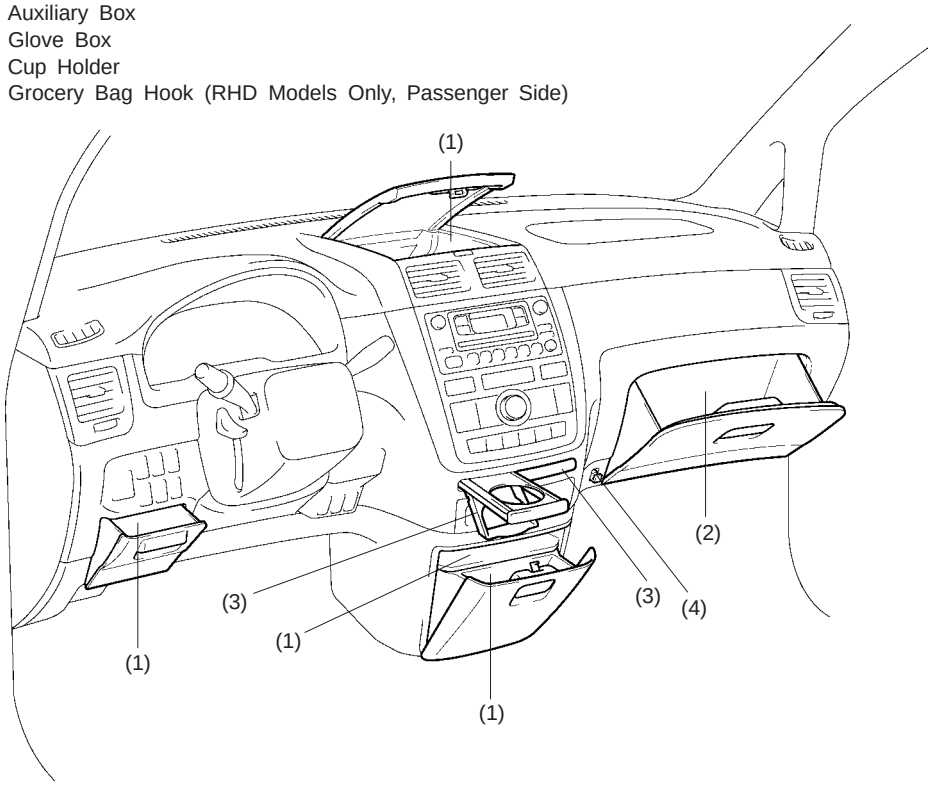

206MO45

Side

(1) Bottle Holder
(2) Pocket
(3) Deck Box (LH & RH)

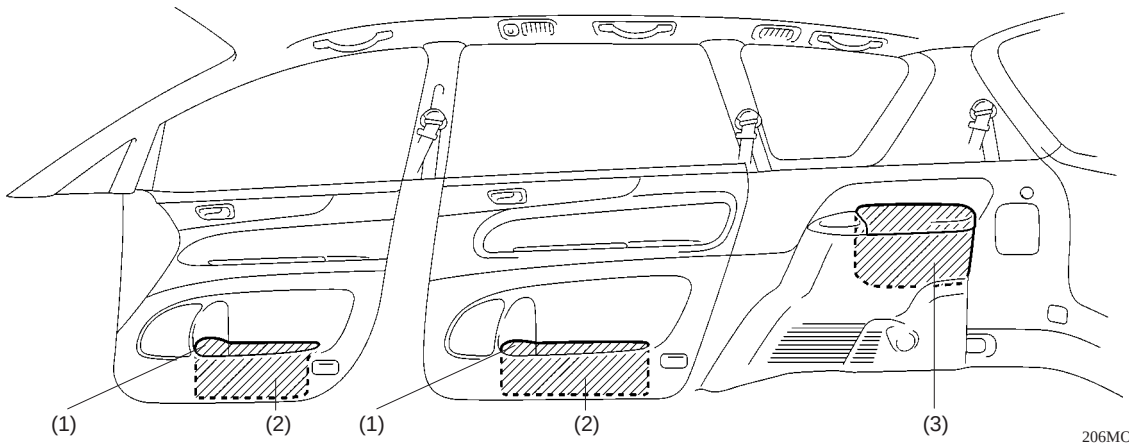

206MO46

INTERIOR

Spare Tire & Luggage Space

Optimum placement under the floor of the spare tire, fuel tank, and muffler results, not in a high floor, but in a spacious cabin and large luggage compartment.

The spare tire carrier, located under the left front seat, has been designed exclusively for a compact spare tire.

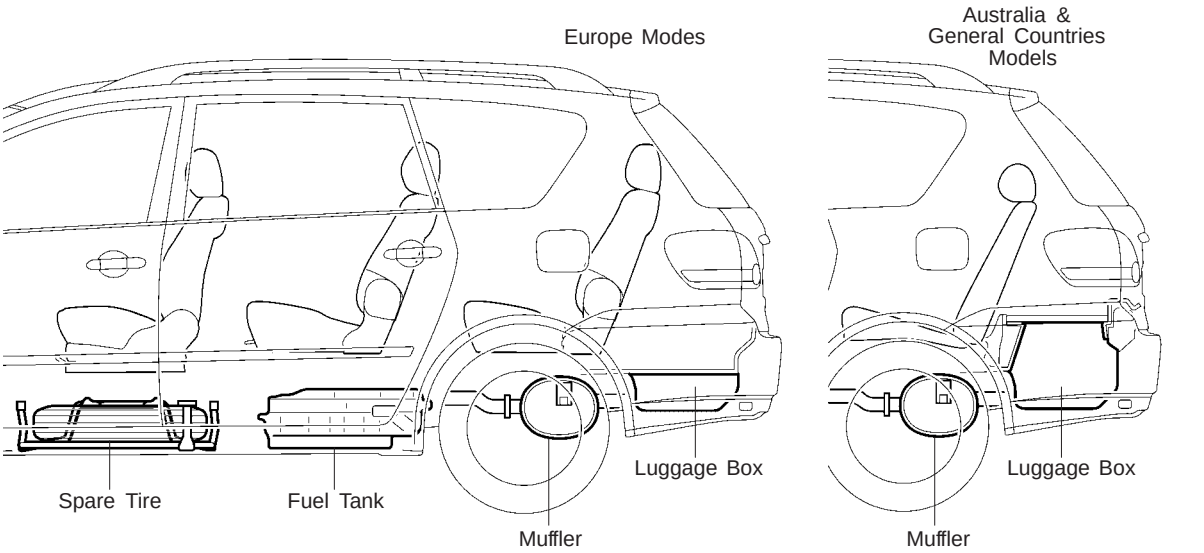

206MO47

Opening Width (Back Door)

	Europe	Australia & General Countries	Previous
Luggage Capacity VDA (ℓ)	212+70*	169 +132*	182
Rear Opening Width at Floor (mm)	1185	1185	1075

*: Luggage Box

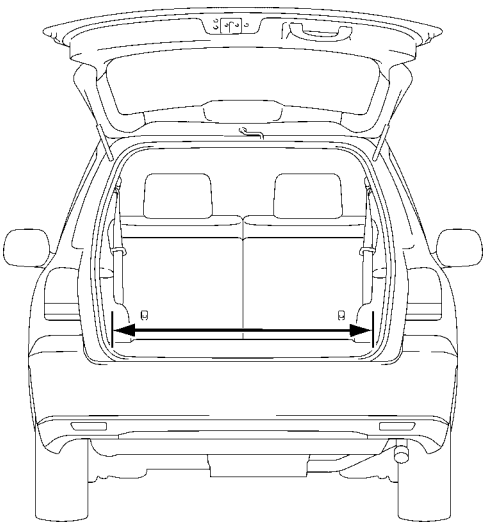

206MO77

Luggage Box

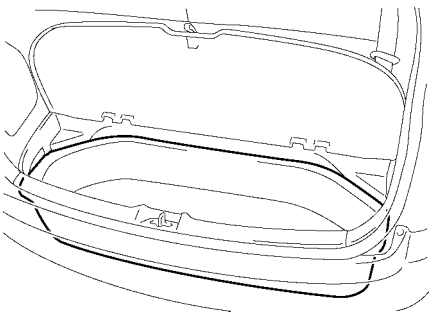

206MO48

	Europe	Australia & General Countries
Width (mm)	1225	1230
Distance (mm)	380	400
Depth (mm)	225	345
Capacity VDA (ℓ)	70	132

EQUIPMENT

An array of equipment designed with attention to detail and regard for ease of use enables you to have a pleasant time in any situation.

Seat

The multi-functional seats can be arranged to suit various purposes.
With the detachable*1, tumble*1, fold-down*2 and tilt-down*3 features of the rear No. 1 and No. 2 seats, the vehicle is laden with amazing features that enable you to adjust the seat arrangement to suit any number of passengers and any situation.

*1: Europe and New Zealand Models
*2: Rear No.1 Seat of Australia & General Countries Models
*3: Rear No.2 Seat of Australia & General Countries Models

Front Seat

- Seat slide : 240 mm
- Seat reclining : 2° × 37 steps
- Driver's seat with vertical lifter
- Driver's seat and front passenger seat with adjustable armrest
- Seat heater optional on Europe LHD models



206MO12

Vertical Lifter

The entire seat can be moved up and down.

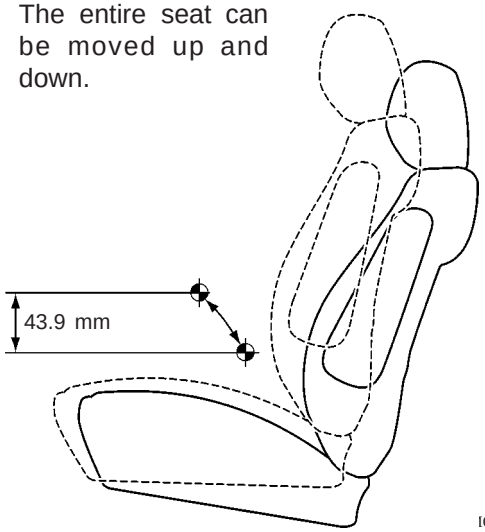

IO18

Seat Slide & Reclining

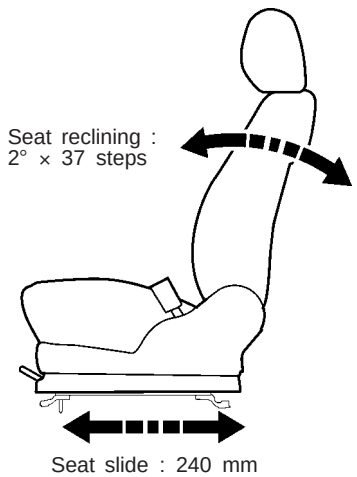

206MO73

EQUIPMENT

Rear Seat

Europe

<table>
<tr><th></th><th>6-Passenger</th><th>7-Passenger</th></tr>
<tr><td rowspan="2">Rear No.1 Seat</td><td colspan="2">● Detachable ● Tumble ● Seat slide : 120 mm ● Seat reclining : 4° × 8 steps
● Table and cup holder equipped on seat back board</td></tr>
<tr><td>● 2 separate seats
● Adjustable armrest

206MO13</td><td>● 3 separate seats
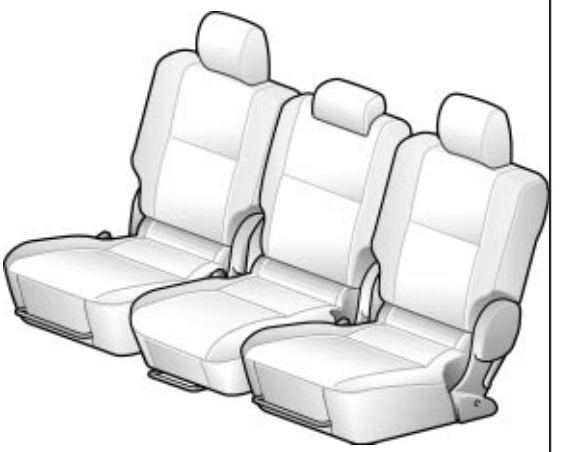
206MO14</td></tr>
<tr><td>Rear No.2 Seat</td><td>
206MO16</td><td>● 2 separate seats
● Detachable
● Tumble
● Seat reclining : 4° × 8 steps
● Table and cup holder equipped on seat back board</td></tr>
</table>

Detachable

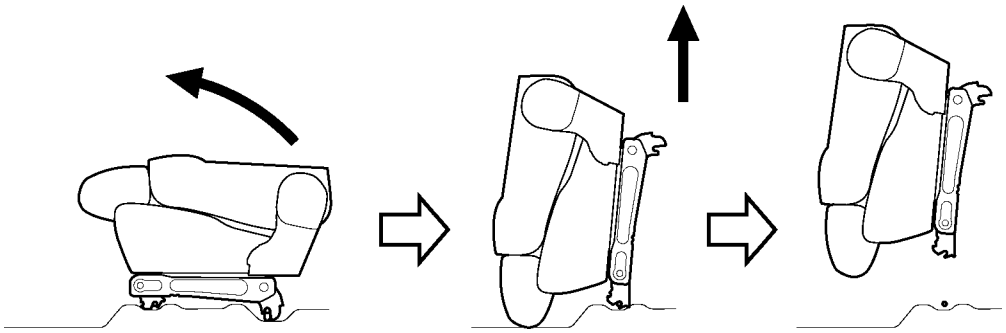

206MO20

Tumble

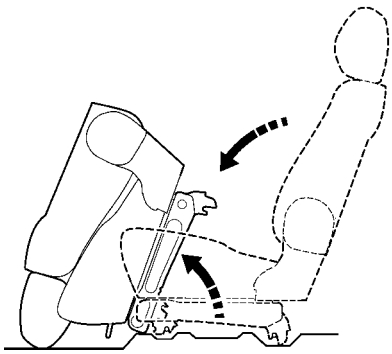

206MO19

Seat Slide & Reclining

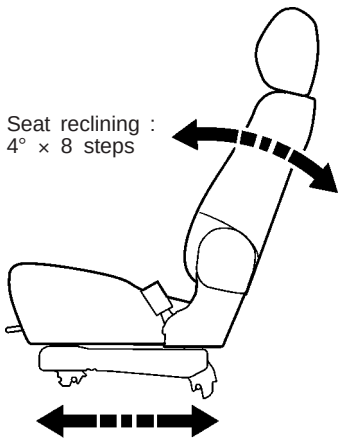

206MO74

EQUIPMENT

Australia **General Countries**

Rear No.1 Seat	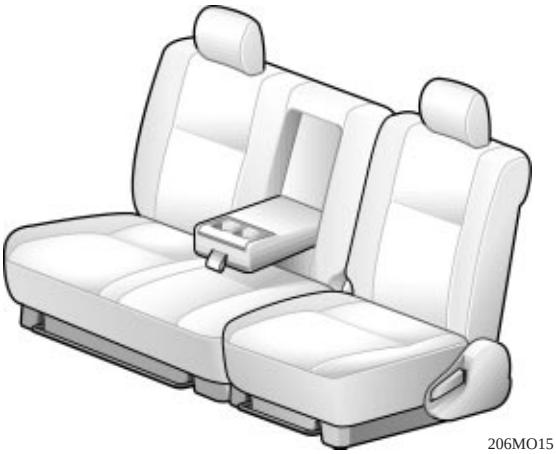 206MO15	● 6:4 dividable fold-down seat ● Double folding seat ● Seat slide : 320 mm ● Seat reclining : 4° × 18 steps ● Center armrest with cup holder ● Tray under seat cushion ● Rope hooks on seat back board
Rear No.2 Seat	 206MO17	● 5:5 dividable fold-down seat ● Tilt down seat ● Seat reclining : 4° × 4 steps ● Rope hooks on seat back board

Double Folding Seat (Rear No.1 Seat)

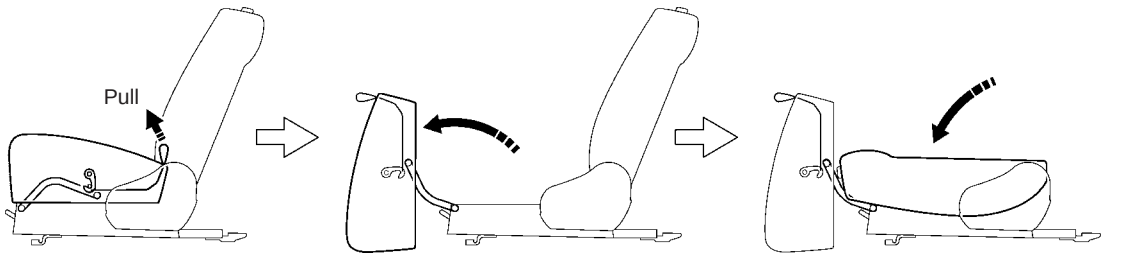

206MO21

Tray Under Seat Cushion (Rear No.1 Seat)

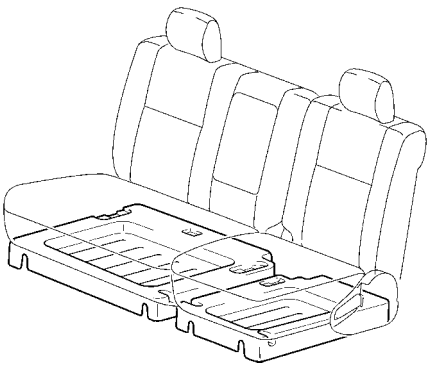

206MO22

Seat Slide & Reclining

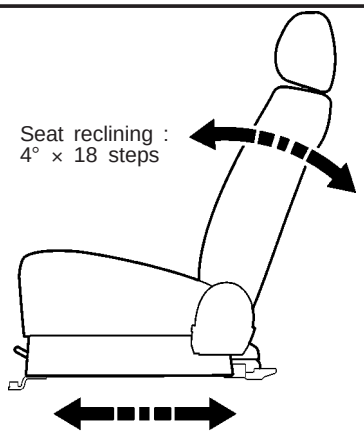

206MO75

Rear No.1 Seat

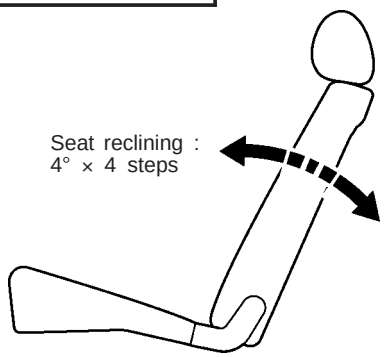

206MO76

Rear No.2 Seat

Tilt Down Seat (Rear No.2 Seat)

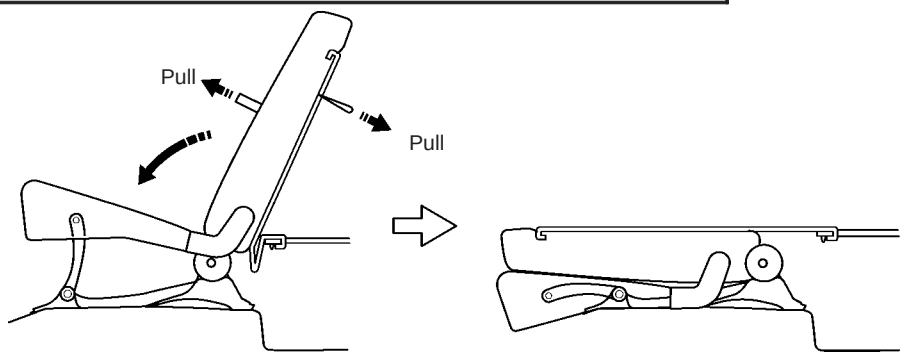

206MO23

Rope Hooks

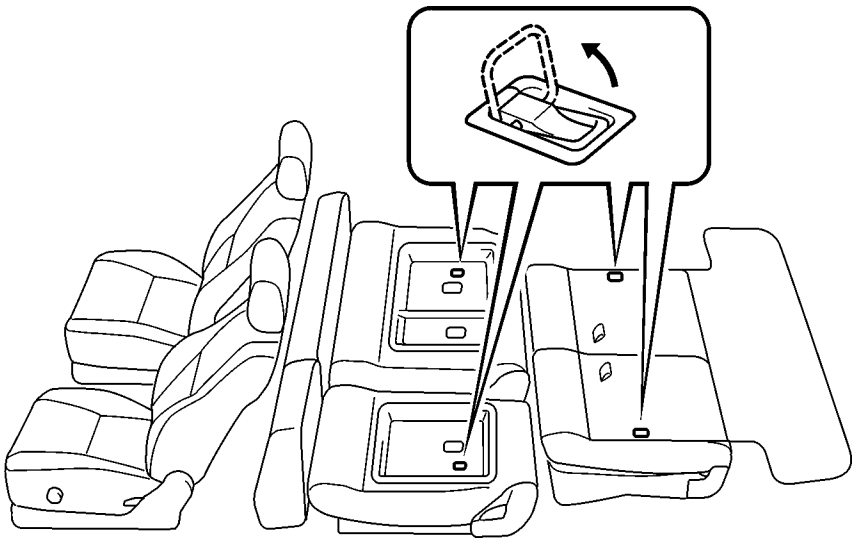

206MO68

EQUIPMENT

Seat Arrangement

Europe

	6-Passenger	7-Passenger
Normal	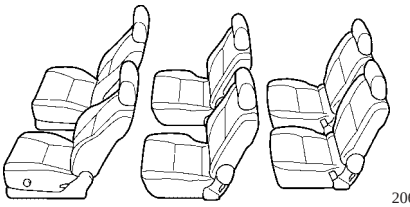 206MO31	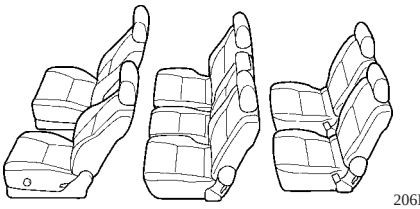 206MO24
Rear No.2 Seat : Tumble	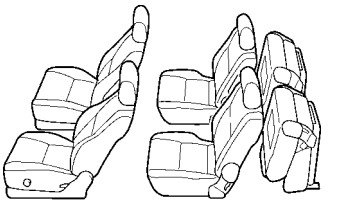 206MO32	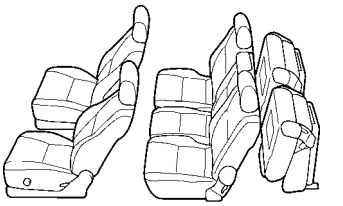 206MO25
Rear No.2 Seat : Detached	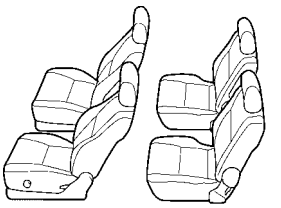 206MO33	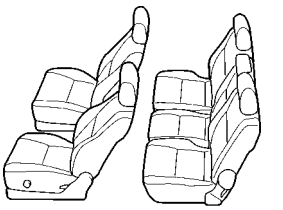 206MO26
Rear No.2 Seat : Detached Rear No.1 Seat : Tumble	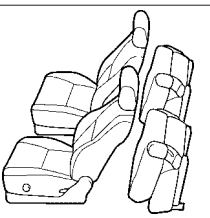 206MO34	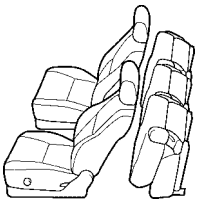 206MO27
Rear No.1 & No.2 Seat : Detached	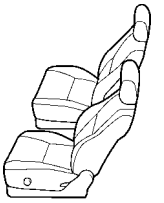 206MO28	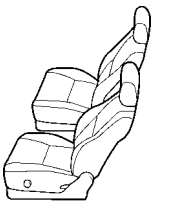 206MO28
Rear No.1 & No.2 Seat : Seat Back Table One Side	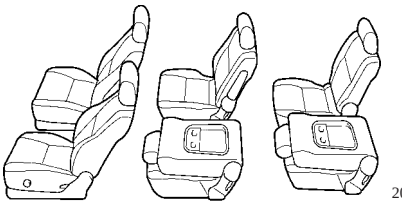 206MO35	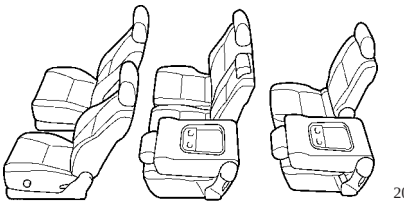 206MO29
Rear No.1 Center Seat : Seat Back Table		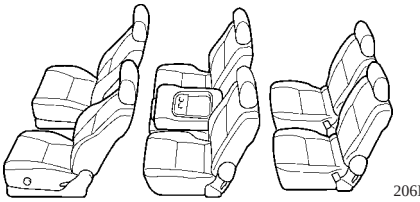 206MO30

Australia **General Countries**

Normal	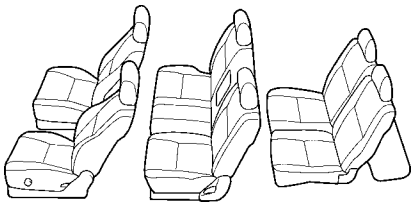 206MO36
Rear Seat : Full Flat Space	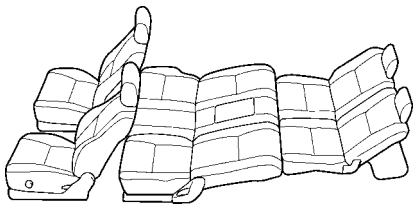 206MO37
Front Seat & Rear No.1 Seat : Full Flat Space	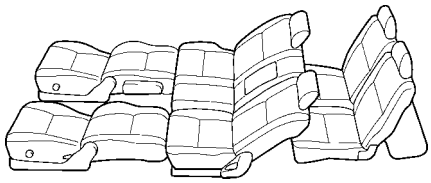 206MO38
Rear No.2 Seat : Tilt Down	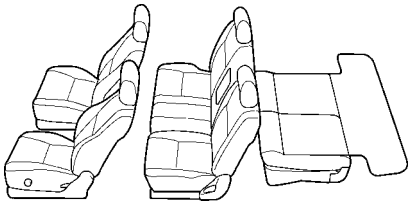 206MO39
Rear No.1 Seat : Double folding One Side Rear No.2 Seat : Tilt Down One Side	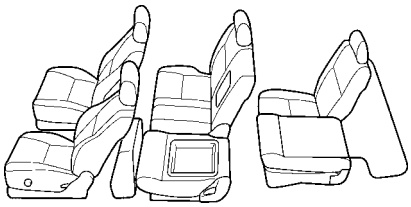 206MO40
Rear No.1 Seat : Double folding Rear No.2 Seat : Tilt Down	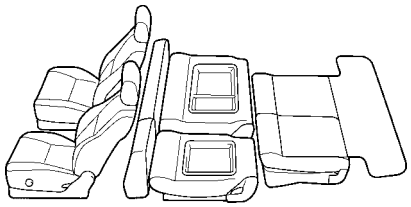 206MO41
Rear No.1 Seat : Seat Back Table One Side	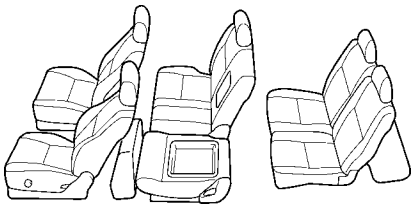 206MO42

MO

EQUIPMENT

Heater & Air Conditioner

A comfortable space for all passengers.

- The clean air filter in the front air conditioner keeps pollen and dust out of the air.
- The rear cooler unit in the right quarter trim from both sides of the ceiling.
- The rear heater unit under the floor of the right side front seat contributes to the effective utilization of the cabin space.

	Europe RHD	Europe LHD	Australia & General Countries
Front Air Conditioner	Option	Option	Standard
Front Heater	Standard	Standard	Standard
Rear Heater	Standard	Option	—
Rear Cooler	Option	Option	Standard

Front Air Conditioner & Rear Heater

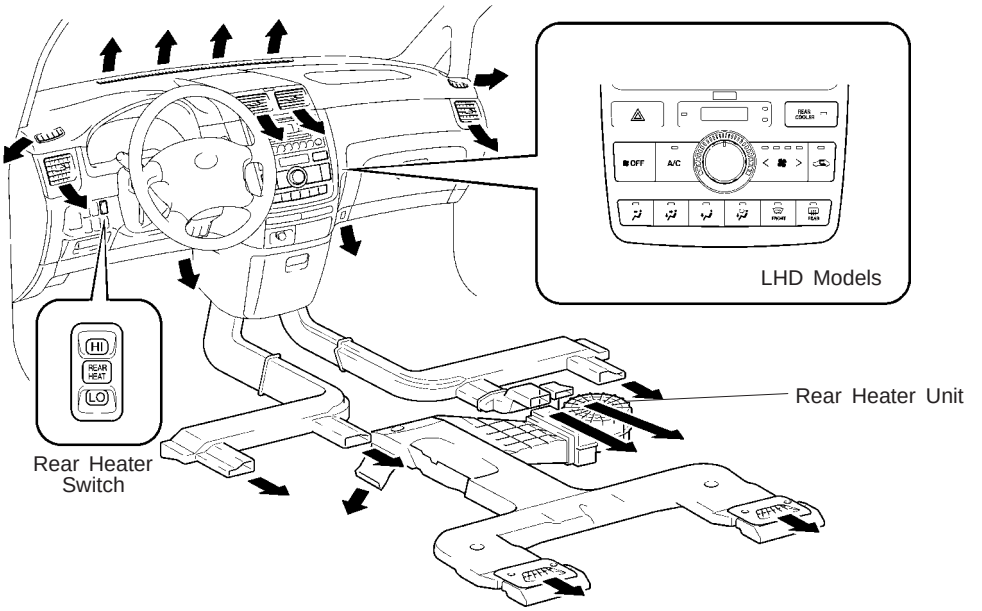

Rear Cooler

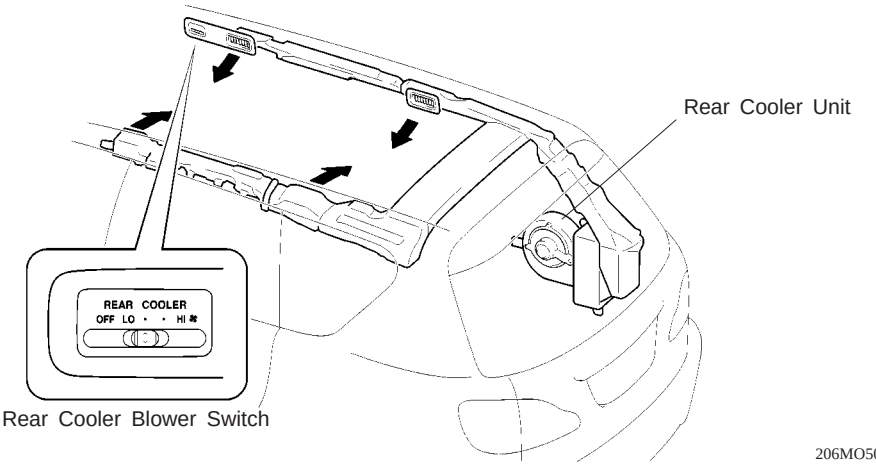

Audio

Six speakers and a center roof antenna are standard equipment. An audio unit is available as an option.

- For European models, an audio system with a Cruise Information Display is available as an option.
- Center roof antenna newly adopted.

MO

Design	Specification	Application
	Radio-less 6-speaker system	Standard for all models
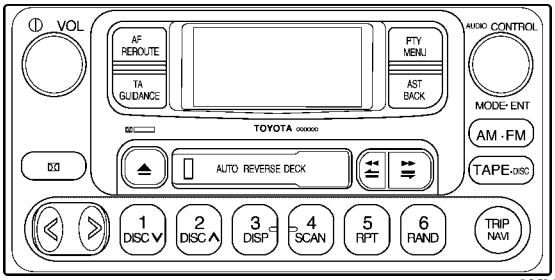 206MO51	● New Toyota standard size*1 ● AM/FM/LM tuner ● Cassette ● Cruise Information Display ● RDS*2 ● 6-speaker system	Europe: option
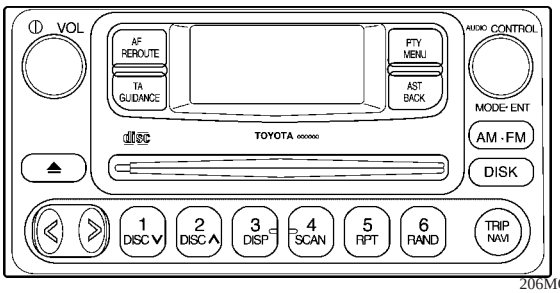 206MO52	● New Toyota standard size*1 ● AM/FM/LM tuner ● CD ● Cruise Information Display ● RDS*2 ● 6-speaker system	Europe: option
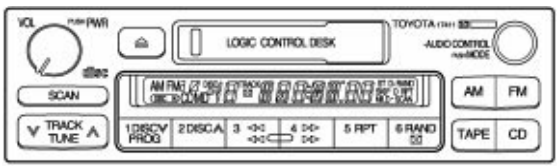 206MO53	● AM/FM/ tuner ● Cassette ● 6-speaker system	Australia, New Zealand, General Countries : option

*1: (Width) 205.5 mm × (Hight) 104 mm *2: RDS : Radio Data System

Speaker Layout

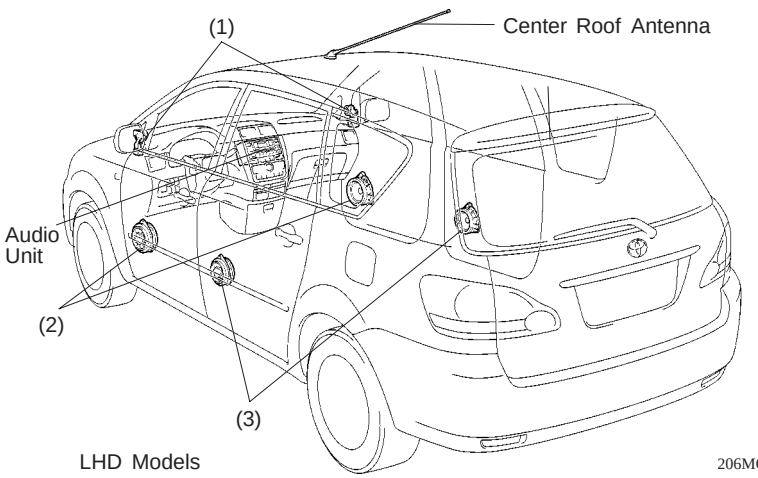

No.	Speaker Type	Input Rating (Max.)
(1)	2.5cm Tweeter	17.5 (35) W
(2)	16cm Full Range	17.5 (35) W
(3)	14cm Full Range	17.5 (35) W

EQUIPMENT

Telescopic Wiper

Australia

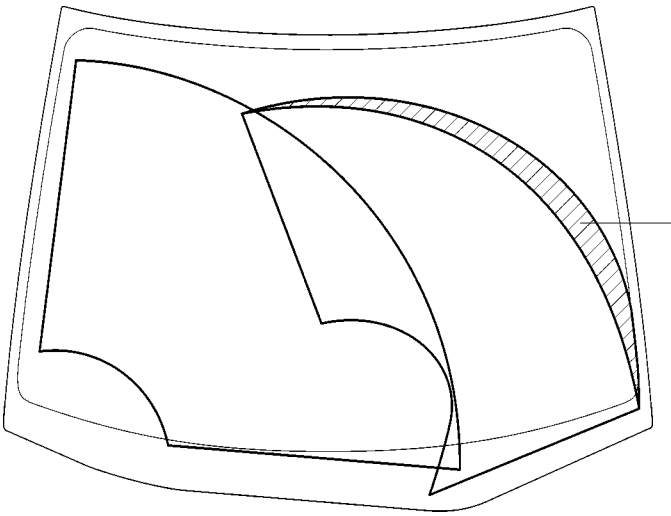

206MO55

The adoption of telescopic wiper has increased the applicable wiper area.

Privacy Glass & UV (Ultraviolet) Cut Glass

Australia

For Australian models, privacy glass with a high rate of UV absorption is available as an option.

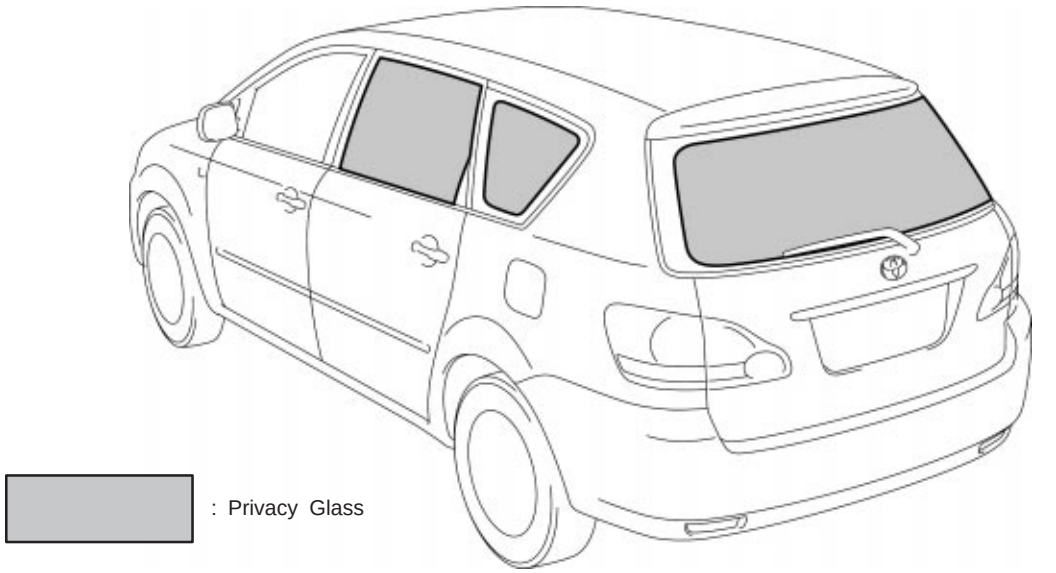

206MO56

Glass Portion		Wind Shield	Front Quarter	Front Door	Rear Door	Rear Quarter	Back Door
Sunlight Penetration Rate	Standard	79%	81%	80%	81%	82%	82%
	Privacy Glass				21%	26%	25%
UV Reduction Rate	Standard	100%	66%	71%	66%	70%	62%
	Privacy Glass				97%	95%	95%

Twin Moon Roof

A twin moon roof that combines both a manual tilt-up type front moon roof and a power sliding type rear moon roof is available as an option for all models.

Back Door Outside Handle

- A new system has been adopted, in which a switch within the back door outside handle functions to unlock the back door electrically. The back door key cylinder has been discontinued.
- After the side door is unlocked with the transmitter, door lock control switch, or door key cylinder*, if the back door outside handle switch is operated, the linkage of the back door lock striker and the back door lock is released, and the back door will open. (*: Except Europe RHD models)

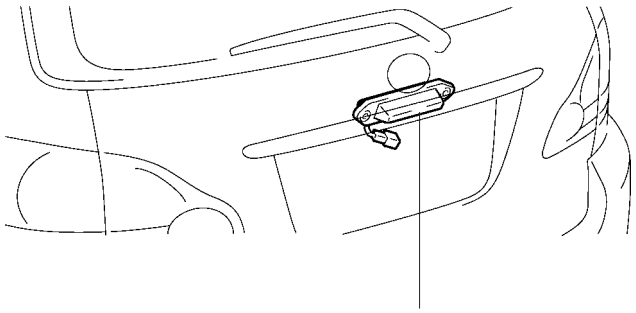

206MO80

- If the battery is overdischarged or any electrical trouble arises and the back door outside handle switch will not unlock the door, the emergency lever inside the cabin will unlock the door.

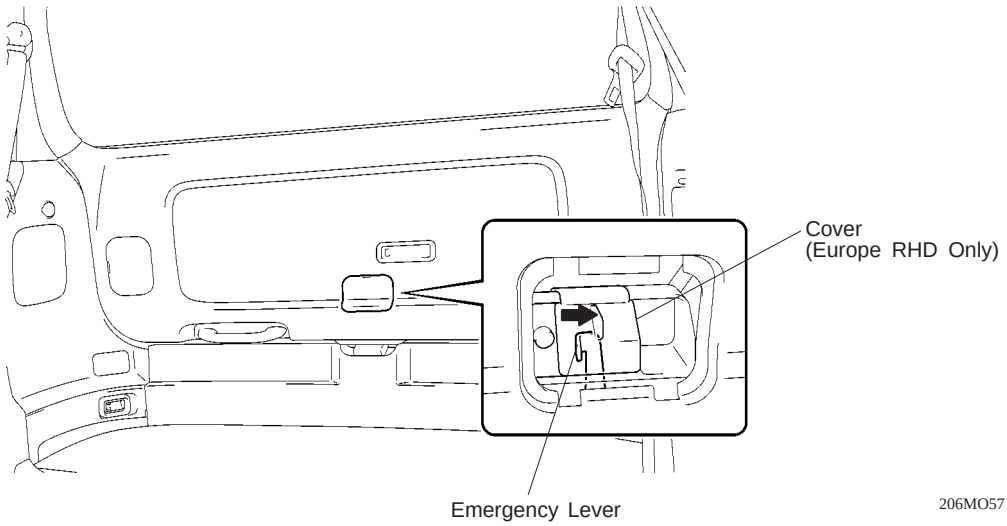

206MO57

EQUIPMENT

Wireless Door Lock Remote Control System

- The wireless door lock remote control system is standard equipment on all models.
- A key-integrated type transmitter with LOCK switch, UNLOCK switch, and indicator light has been adopted.
- With the added “answer back” function, the hazard lights will flash once when the door is locked with the transmitter, and twice when it is unlocked.
- With the added illuminated entry function, the interior light will come on when the door is unlocked with the transmitter, and go out when it is locked.
- A double locking system is provided on Europe RHD models. By pressing the transmitter’s lock switch twice within 5 seconds, it has been set the double locking system. Once set, this system prevents all the side doors and back door from being unlocked from either inside or outside of the vehicle.

Key-Integrated Type Transmitter

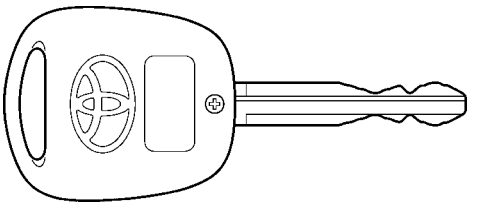

206MO58

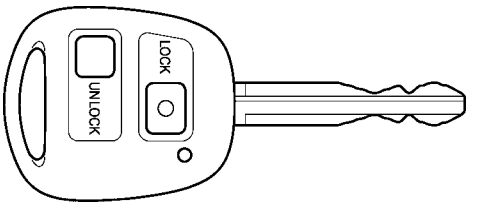

206MO59

Power Window System

The front and rear power windows are provided with key-off operation function and one-touch auto up and down with jam protection function.

Theft Deterrent System

When any attempt is made to forcibly enter the vehicle, open the engine hood, unlock any door without a key, or when the battery terminal are removed and reconnected, this system sounds the vehicle horn and self power siren, flashes hazard lights, illuminates the interior light, to deter illegal or mischievous activities. At the same time it locks all doors, if any of the door is unlocked during alarm.

Engine Immobiliser System

This system is constructed so that the engine will only start when the ID code of the transponder chip embedded in the key matches the code registered in the transponder key ECU.

MECHANISM

A quiet, pleasant ride and powerful performance, plus good fuel economy, nobles fun driving.

Engine

A 2.0-liter gasoline engine, the 1AZ-FE, for all destinations, and a 2.0-liter diesel engine, the 1CD-FTV, for Europe.

1AZ-FE Engine

The newly adopted 1AZ-FE engine is a 2.0-liter, 16-valve DOHC, in-line 4-cylinder engine. This engine, in addition to being small and lightweight, is equipped with the VVT-i (Variable Valve Timing-intelligent) system and achieves high performance, quietness, and fuel economy. Furthermore, it is clean and easy on the environment, complying with European exhaust regulation STEP III.

New Feature

- There are three new features: the air fuel ratio sensor, thin-wall ceramic TWC (Three-Way Catalytic Converter), and Oxygen sensor. Two of each of these are equipped in the exhaust manifold. Through these measures it complies with European exhaust regulation STEP III and has excellent exhaust purification capabilities.
- Weight-saving gains have been achieved with the adoption of a magnesium alloy diecast cylinder head cover, aluminum alloy cylinder block, plastic intake manifold, and PS (Planetary Reduction-Segment Conductor Motor) starter.

Outline of the Engine

No. of Cyls. & Arrangement	4-Cylinder, In-line
Valve Mechanism	16-valve DOHC, VVT-i, Chain Drive
Displacement cm^3 (cu.in.)	1998 (121.9)
Bore × Stroke mm (in.)	86.0 × 86.0 (3.39 × 3.39)
Compression Ratio	9.8
Maximum Output (kw / rpm)	110 / 6000
Maximum Torque (Nm / rpm)	192 / 4000

Engine Performance Curve

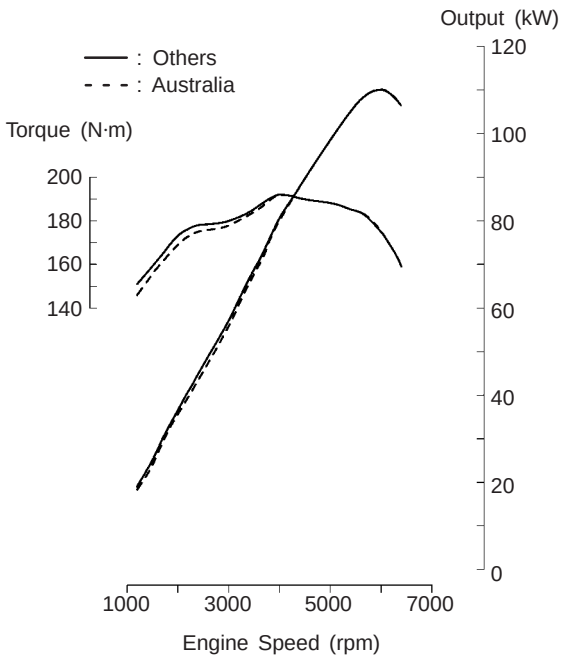

185EG39

MECHANISM

1CD-FTV Engine

1CD-FTV TOYOTA D-4D (Direct injection 4 stroke common-rail Diesel engine) is a newly developed in-line 4-cylinder, 2.0-liter, 16-valve DOHC with intercooler turbo-charged diesel engine.
This is a high performance diesel engine that employs a direct injection system and common-rail system. It therefore achieves low fuel consumption, vibration and noise, has a long life expectancy and good serviceability, and meets European exhaust regulation STEP III.

New Feature

- With the installation of the Variable Nozzle turbocharger, power output is increased while both low emissions and low fuel consumption are achieved.
- With the adoption of the air-cooled intercooler that lowers intake air temperature, engine output improves while exhaust gas becomes cleaner.
- Due to the adoption of the EGR (Exhaust Gas Recirculation) cooler and step motor-type EGR valve, high-precision and efficient EGR control is possible, and clean emission has been achieved.
- A pressurized reservoir tank has been adopted to prevent the engine coolant from deteriorating upon contact with external air.

Outline of the Engine

No. of Cyls. & Arrangement	4-Cylinder, In-line
Valve Mechanism	16-valve DOHC, Gear and Belt Drive
Displacement cm^3 (cu.in.)	1995 (121.7)
Bore × Stroke mm (in.)	82.2 × 94.0 (3.24 × 3.7)
Compression Ratio	18.6
Maximum Output (kw / rpm)	85 / 4000
Maximum Torque (Nm / rpm)	250 / 1800 ~ 3000

Engine Performance Curve

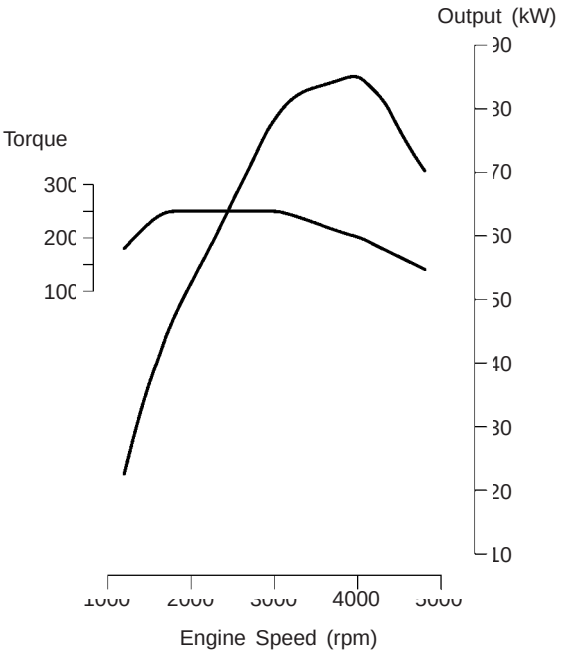

201EG60

Transaxle

Manual Transaxle

The newly developed E356 manual transaxle has been adopted for models with the 1AZ-FE engine, and the E355 manual transaxle for models with the 1CD-FTV engine.

New Feature

- A triple-cone type synchromesh mechanism is used in the 1st gear and 2nd gear to increase the synchronizer capacity. This helps to reduce the shifting effort and smoother shifting.
- A double-cone type synchromesh mechanism is used in the reverse gear to suppress gear engagement noise.
- The shift feel has been improved through the adoption of the mass damper* on the shift and select shaft, and a rolling type lock ball assembly.
  *: Only E356 transaxle for 1AZ-FE Engine

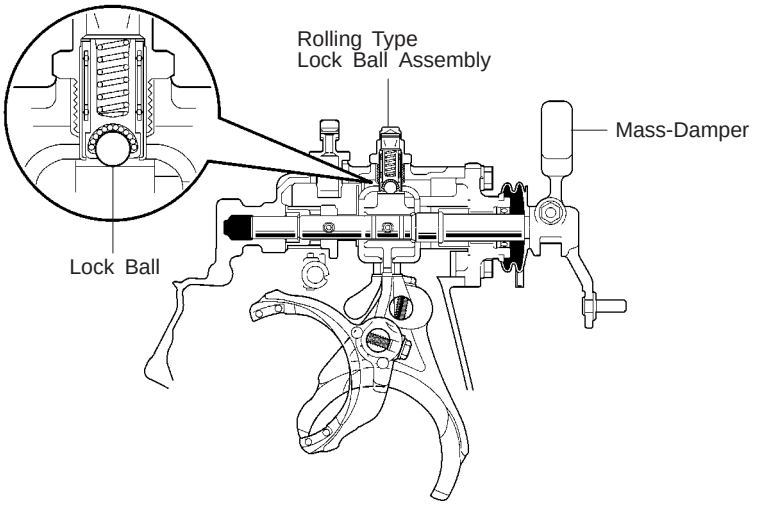

E356 Transaxle for 1AZ-FE Engine

Specifications

Item	Gear Ratio						Differential Gear Ratio
	1st	2nd	3rd	4th	5th	Reverse	
E355 (1CD-FTV)	3.833	2.045	1.333	0.972	0.775	3.583	3.684
E356 (1AZ-FE)				1.028			4.235

MECHANISM

Automatic Transaxle

The compact and high-capacity 4-speed U241E automatic transaxle [Super ECT (Electronically Controlled Transaxle)]has been newly adopted to match the output characteristics of the 1AZ-FE engine.

Specifications

Item	Gear Ratio					Differential Gear Ratio
	1st	2nd	3rd	4th	Reverse	
U241E	3.943	2.197	1.413	1.020	3.145	3.120

ATF (Automatic Transmission Fluid) Warmer

An ATF warmer has been adopted for the purpose of warming up the ATF quickly and to set the ATF temperature higher. As a result, fuel economy has been improved.

Suspension

Front Suspension

An increase in suspension stroke results in greater ride comfort.

- A MacPherson strut type independent suspension with an L-shaped lower arm, which also provides the function of a strut bar, has been adopted.
- Changes in caster and king pin inclination have resulted in the achievement of excellent straight line stability and steering feeling.

Rear Suspension

The torsion beam type suspension contributes to the low floor and spacious cabin while achieving excellent ride quality and maneuverability.

- Excellent ride quality and maneuverability have been realized by the increase in the suspension stroke and the adoption of the stabilizer bar.
- Road noise has been decreased with the adoption of the dynamic damper and suspension arm bushing tuning.

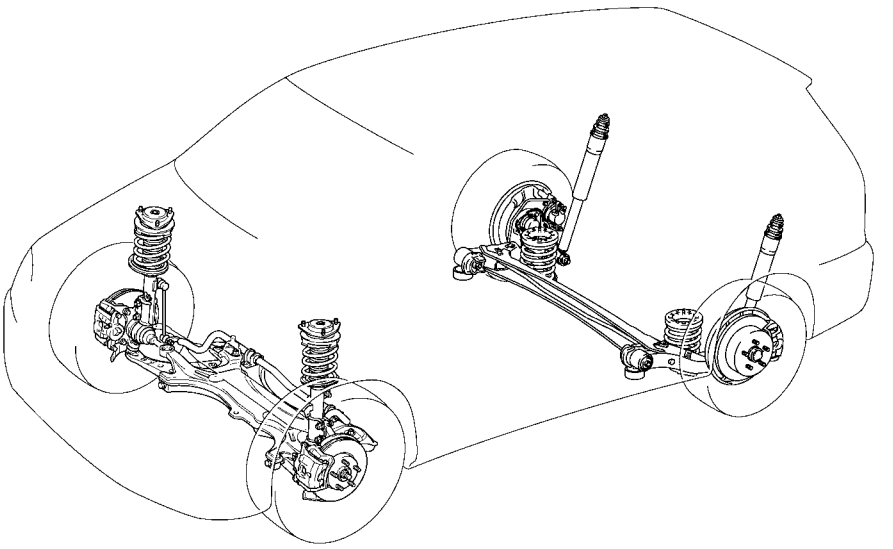

206CH08

SAFETY

Safety design and features aimed at minimizing risk. Consideration for safety can be seen throughout the vehicle.

Active Safety

ABS (Anti-lock Brake System) with EBD (Electronic Braking force Distribution)

The ABS helps to prevent the tires from locking up, thereby ensuring vehicle performance and handling ability.
The EBD system distributes optimal breaking force to the front and rear tires in accordance with driving conditions. Furthermore, braking force is distributed to the left and right wheels during braking when cornering to ensure vehicle performance and proper breaking power.

Brake Assist

This system works in conjunction with the ABS to support drivers who are unable to apply the brakes fully during emergency braking and for drivers who tend to apply the brakes too lightly. When the brakes are applied at high speeds, it is judged by the skid control ECU to be emergency braking and additional braking power is generated automatically by the system to ensure sufficient vehicle braking power.

SAFETY

Passive Safety

Impact-absorbing Body

An impact absorbing body that effectively help to absorb and distribute front, side and rear impacts to ease the effects on the driver and passengers has been adapted. A high strength body structure, to minimize deformation of the cabin itself, has also been adopted as a passive safety measure.

Frontal Collisions

As well, the strong cabin frame eases the effects of the impact on the driver and passengers, and minimizes deformation of the cabin.

- Made of differential-thickness sheet steel, the front portion of the side member effectively absorbs the impact of a collision.
- The rear end of the side member is attached to the rockers, and the right and left rockers are attached to the cross member, so the impact of a collision is dispersed.
- The front bumper reinforcement is equipped with a crash box, designed so that repair costs will be lower in the event of a slight collision.

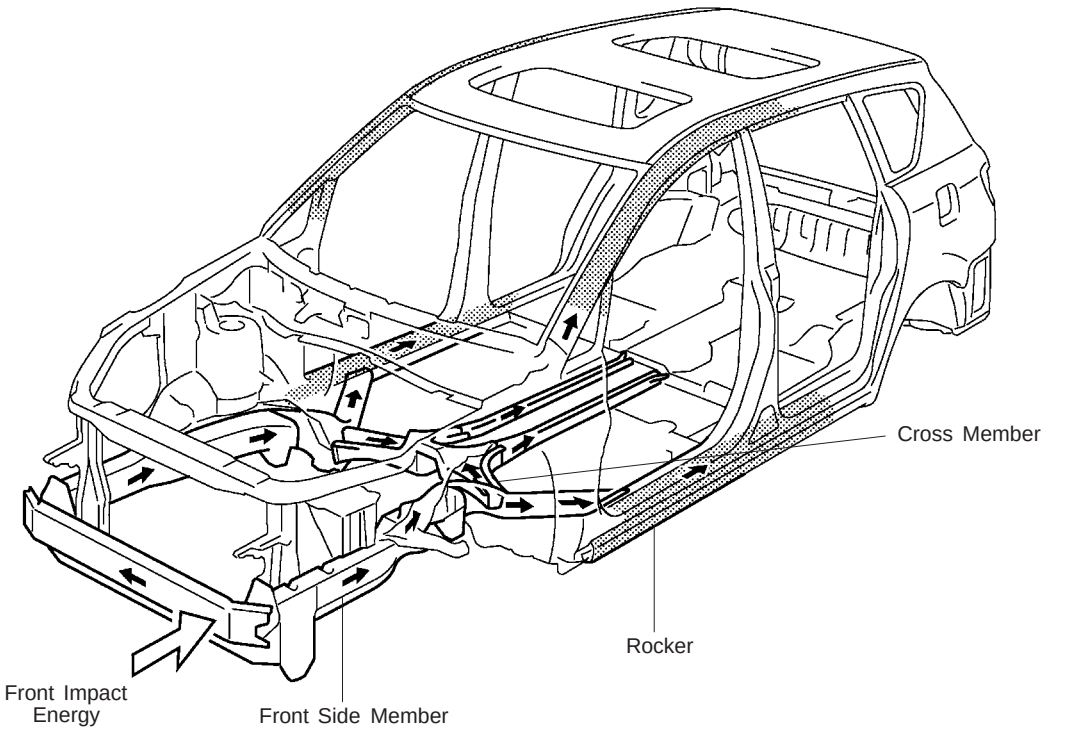

206BO03

Side Collisions

Along with the body structure, which effectively help to absorb and distribute the load on the frame in a side collision, we have maintained the strength of each pillar, rocker panel and door to minimize deformation of the cabin.

- Differential thickness sheet steel is used above and below the center pillar to help absorbing impact from the side and minimize deformation of the cabin.
- The front and rear doors are equipped with inner and outer door reinforcements which help to minimize deformation of the cabin in a side collision.

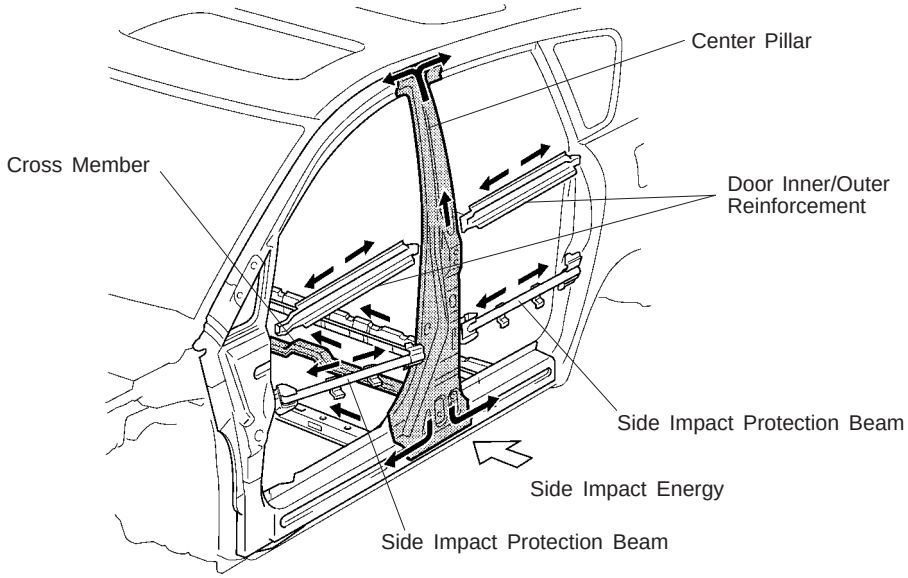

206BO05

Rear Collisions

In rear collisions as well, the structure effectively absorbs and distributes impact, softens the impact to passengers, and helps to minimize deformation of the cabin.

- Differential-thickness sheet steel is used for the rear side member and rear side member plate to effectively absorb impact.
- Two cross members are positioned at the crook of the rear side member, effectively helping to absorb the energy of a collision.

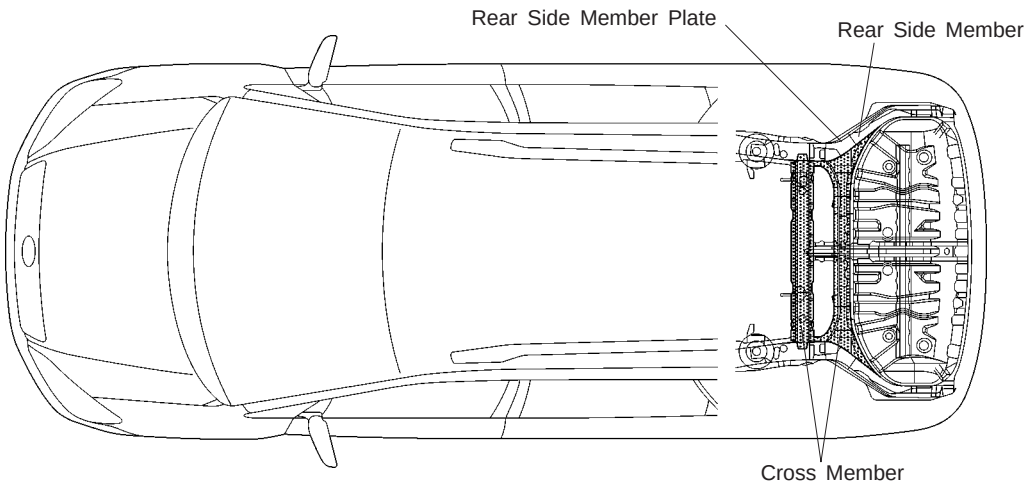

206MO78

SAFETY

SRS Airbag System

SRS airbags are standard for the driver and front passenger seats in all models. In the event of a severe frontal collision, the airbags function to the seat belts in helping to reduce the impact on the driver's and front passenger's head and chest. SRS side airbags and curtain shield airbags for the driver and front passenger seats, which help to ease side impacts, are optional on all models.
When the sensor at the bottom of the center pillar senses side impact, the side airbag and the curtain shield airbag are simultaneously inflated. They help reducing the impact energy that is transmitted to the driver and front passenger in the event of a side collision.

SRS Driver & Front Passenger Airbag

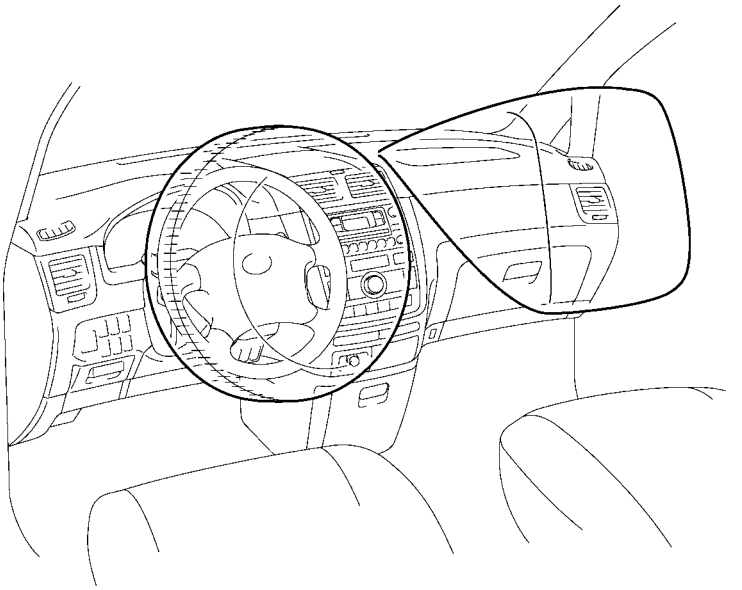

206MO60

SRS Side & Curtain Shield Airbag

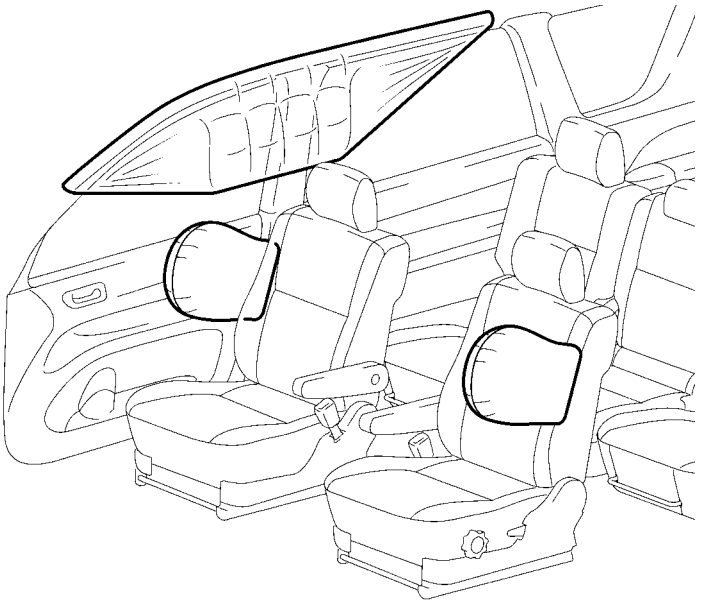

206MO61

Head Impact Protection Structure

With the front pillar garnish, center pillar garnish, roof side inner garnish, and roof side rail, a structure that help to absorb impact has been adopted.
These measures help to lessen the impact to the occupants' heads have been taken in consideration of the possible secondary collision that could occur between the occupant and the parts of the cabin in the event of an accident.

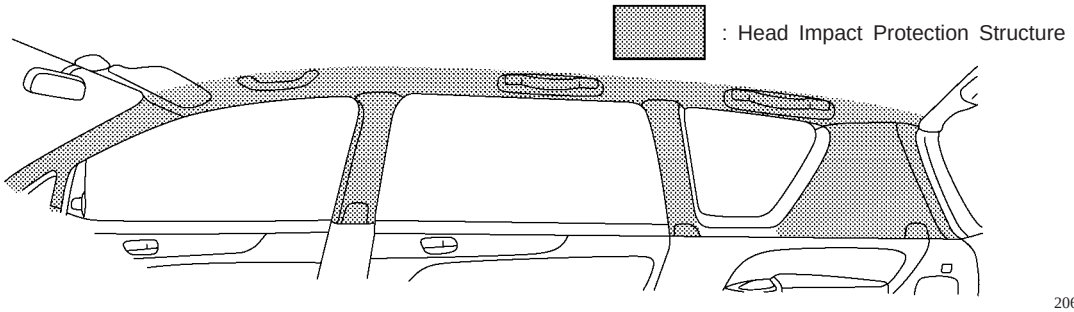

206MO79

CRS Anchor System

- ISO-FIX bar securing child seats (CRS: Child Restraint System), which complies with ISO-FIX, has been installed between the seat back and cushion of No.1 rear seats to enable installation of a child seat.
- On Australia models, three CRS tether anchor brackets for securing a child seat have been installed in the back side of the seats.

Europe

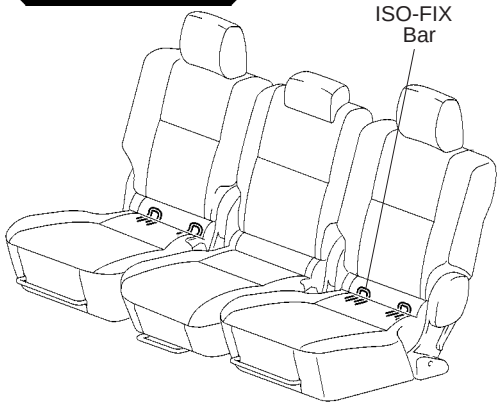

206MO62

General Countries

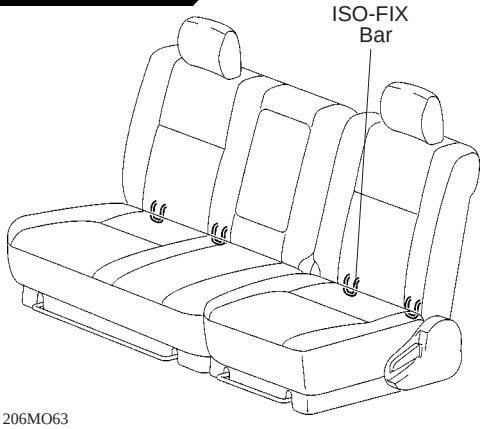

206MO63

Australia

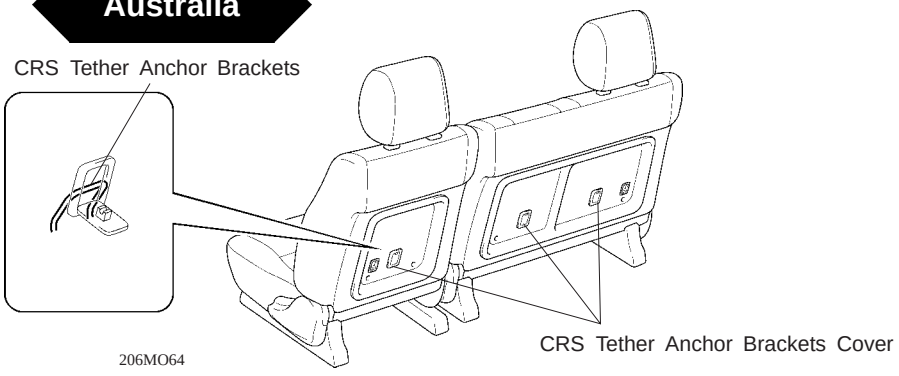

206MO64

SAFETY

Seat Belt

Seat belts for the front seats are equipped with pretensioners, which snugly restrain the occupants at the time of a collision, and forcelimiters, which soften the impact to the chest from the seat belt itself.

Location			Type	Function			
				ALR*1	ELR*2	Pretensioner	Forcelimiter
Front Seat			3-Point	—	●	●	●
Rear No.1 Seat	Outside		3-Point	●	●	—	—
	Center	Europe	3-Point	●	●	—	—
		Australia, General Countries	2-Point (NR*3)	—	—	—	—
Rear No.2 Seat			3-Point	—	●	—	—

*1: ALR : Automatic Locking Retractor
*2: ELR : Emergency Locking Retractor
*3: NR : Non Retractor

Europe

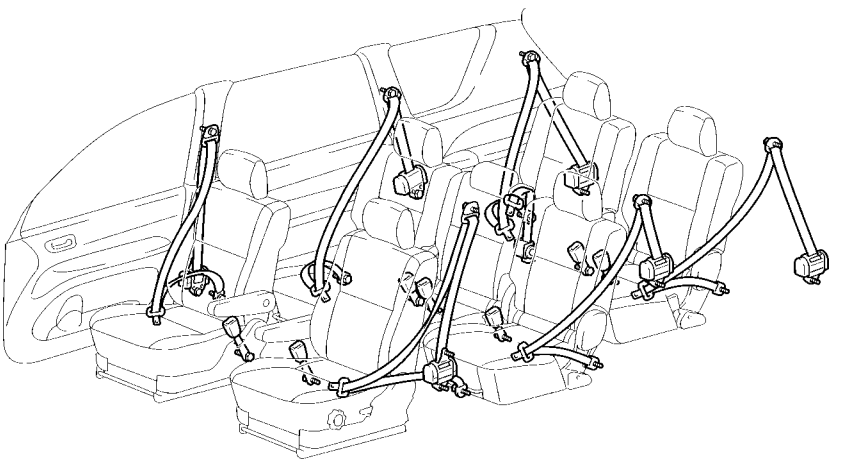

206MO65

Australia **General Countries**

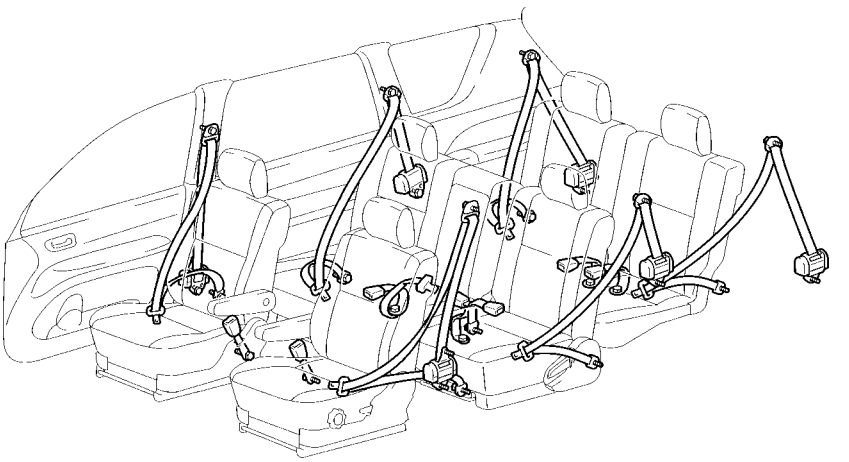

206MO66

ENVIRONMENT

Consideration for humans and the earth has been accomplished by improvement of recycling capability, and reduction in environmentally harmful materials.

Adoption of TSOP & TPO

TSOP (The Super Olefin Polymer) and TPO (Thermoplastic Olefin), both materials offering excellent recyclability, have been extensively used throughout the vehicle as an environmental protection measure.

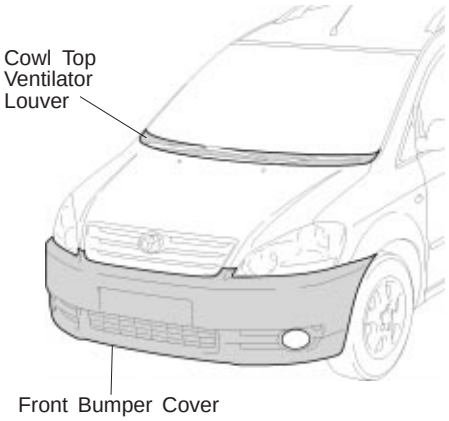

206MO69



206MO70

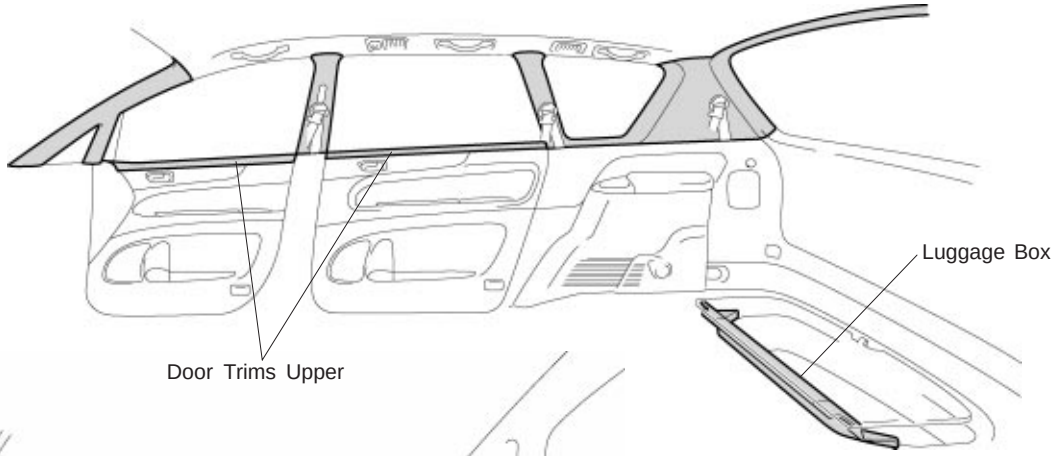

206MO72

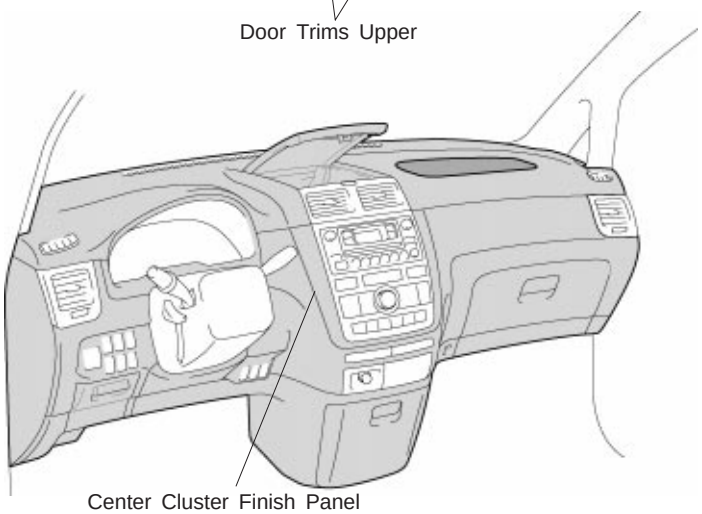

206MO71

TSOP :

TPO :

ENVIRONMENT

Reduction in the Amount of Lead Used

To help protect the environment, the amount of lead used has been reduced and thorough development of lead-free parts has been implemented.
The amount of lead used in one Picnic/ Avensis Verso has been reduced to about one-fifth of the average amount of lead used in 1996.

Main lead-free parts :

- Radiator
- Heater core
- Wire harness

Main parts with reduced lead :

- Wheel balance weight

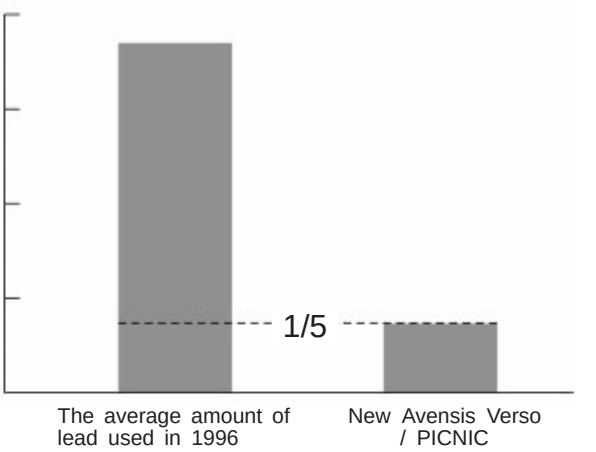

DIMENSIONS

mm (in.)

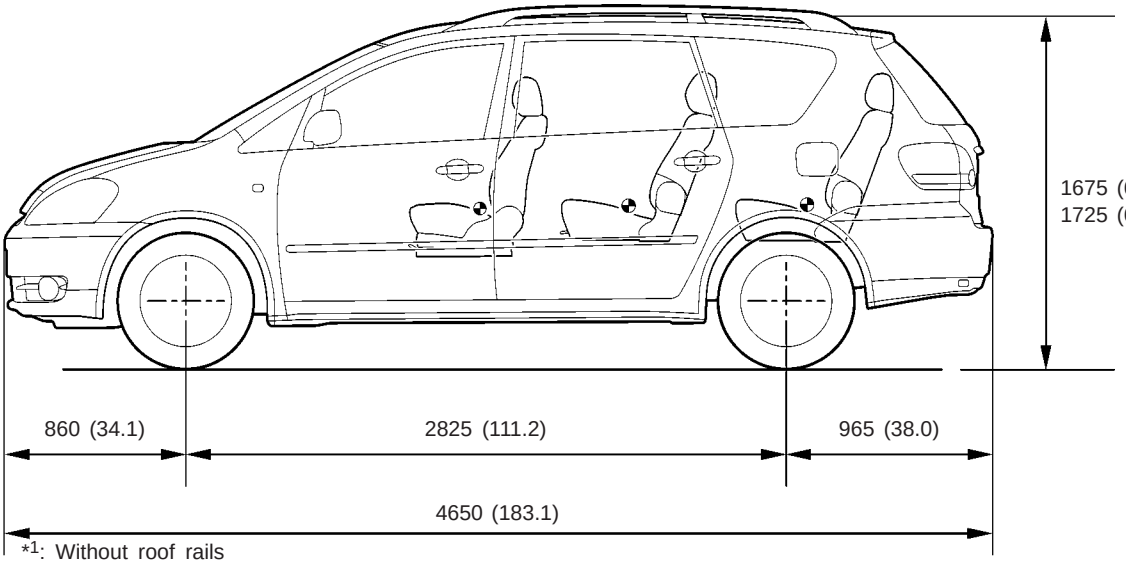

*1: Without roof rails
*2: With roof rails

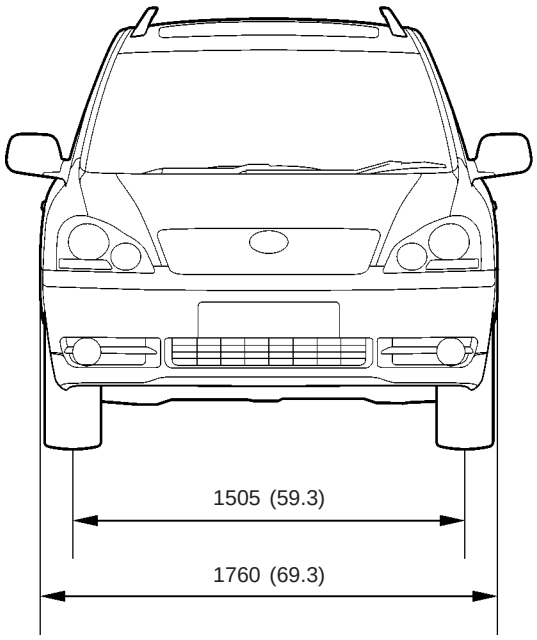

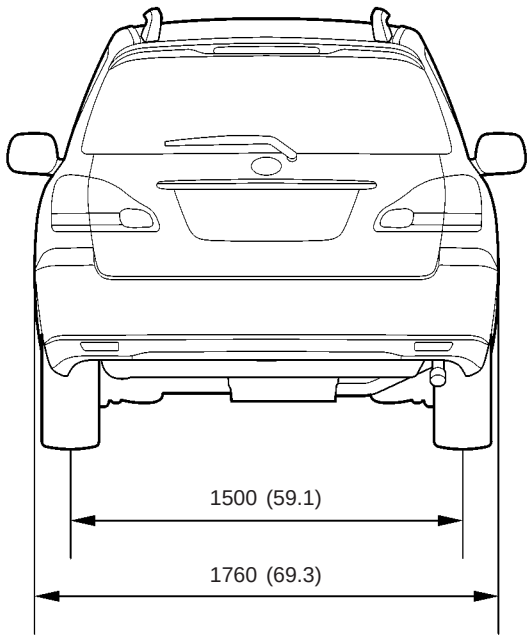

206MO67

EQUIPMENT LIST

● : Standard OP : Option

		Europe		Australia	General Countries
		ACM20L/R - ANMDKW ACM20L/R - ANSDKW CLM20L/R - ANMDYW	ACM20L/R - ARMDKW ACM20L/R - ARSDKW CLM20L/R - ARMDYW	ACM20R - ARMEKQ ACM20R - ARSEKQ	ACM20R - ARSEK
Exterior					
Rear Spoiler		—	—	OP	—
Privacy Glass & UV*1 Cut Glass		—	—	OP	—
Chassis					
Tire	205/65 R15	●	●	●	●
	205/60 R16	OP	OP	OP	OP
Disc Wheel	15 × 6 1/2JJ, Full Wheel Cap	●	●	●	●
	15 × 6 1/2JJ, Aluminum Wheel	OP	OP	OP	OP
	15 × 6 1/2JJ, Aluminum Wheel	OP	OP	OP	OP
ABS*2 with EBD*3		●	●	●	●
Brake Assist		●	●	●	●
Steering	Power Steering System	●	●	●	●
	Tilt Steering	●	●	●	●
	4-Spoke Steering Wheel (Urethane)	●	●	●	●
	4-Spoke Steering Wheel (Leather)	OP	OP	OP	OP
Body					
Seat	Armrest (Front Seats)	●	●	●	●
	Seat Heater (Front Seats)	OP (LHD)	OP (LHD)	—	—
	2 Separate Seat W/Armrest (Rear No.1 Seat)	●	—	—	—
	3 Separate Seat (Rear No.1 Seat)	—	●	—	—
	6:4 Divisional Fold Down Seat (Rear No.1 Seat)	—	—	●	●
	2 Separate Seat (Rear No.2 Seat)	●	●	—	—
	5:5 Divisional Fold Down Seat (Rear No.2 Seat)	—	—	●	●
	Seating Capacity	6	7	7	7
	Seat Under Tray (Rear No.1 Seat)	—	—	●	●
	CRS*4 Anchor System (ISO-FIX Bar)	●	●	—	●
	CRS*4 Anchor System (CRS Tether Anchor Bracket)	—	—	●	—
Seat Belt	Front Seat Belts With Pretensioner & Forcelimiter	●	●	●	●
	3-point ALR*5 Seat Belt (Rear No.1 Seats)	2	3	2	2
	3-point ELR*6 Seat Belt (Rear No.2 Seats)	2	2	2	2
	2-point NR*7 Seat Belt (Rear No.1 Center Seat)	—	—	●	●

*1 : UV : Ultraviolet
*2 : ABS : Anti-lock Brake System
*3 : EBD : Electronic Brake force Distribution
*4 : CRS : Child Restraint System
*5 : ALR : Automatic Locking Retractor
*6 : ELR : Emergency Locking Retractor
*7 : NR : Non Retractor

● : Standard OP : Option

Body Electrical		Europe		Australia	General Countries
		ACM20L/R - ANMDKW ACM20L/R - ANSDKW CLM20L/R - ANMDYW	ACM20L/R - ARMDKW ACM20L/R - ARSDKW CLM20L/R - ARMDYW	ACM20R - ARMEKQ ACM20R - ARSEKQ	ACM20R - ARSEK
Lighting	Front Fog Light	OP	OP	OP	OP
	Rear Fog Light	●	●	—	—
	Headlight Cleaner	OP (LHD)	OP (LHD)	—	—
	Headlight Beam Level Control System	●	●	—	—
	Illuminated Entry System	●	●	●	●
	Light Reminder System	●	●	●	●
	Daytime Running Light System	OP (LHD)	OP (LHD)	—	—
Wiper System	Washer-linked Function (Front)	●	●	●	●
	Adjustable Interval INT Function (Front)	●	●	●	●
	Rear Wiper	●	●	●	●
Air Conditioner	Front Air Conditioner with Clean Air Filter	OP	OP	●	●
	Rear Heater	● : RHD OP : LHD	● : RHD OP : LHD	—	—
	Rear Cooler	OP	OP	●	●
Audio System	Radio-less 6 Speaker	●	●	●	●
	AM / FM / Cassette / 6 Speaker	—	OP*8	OP	OP
	AM / FM / LM / Cassette / RDS*9 / 6 Speaker	OP	OP*10	—	—
	AM / FM / LM / CD / RDS*9 / 6 Speaker	OP	OP*10	—	—
	Center Roof Antenna	●	●	●	●
Power Window System	All-door One-touch Auto Up-and-Down, Jam Protection, Key-off Operation	●	●	●	●
Power Door Lock / Wireless Door Lock Remote Control System		●	●	●	●
Double Locking System		● (RHD)	● (RHD)	—	—
Engine Immobiliser System		●	●	●	—
Theft Deterrent System		OP (RHD)	OP (RHD)	—	—
SRS*11 Airbag System	SRS*11 Driver & Front Passenger Airbags	●	●	●	●
	SRS*11 Side & Curtain Shield Airbags	OP	OP	OP	OP
Twin Moon Roof		OP	OP	OP	OP
Outside Rear View Mirror	Electrical Remote Control Mirrors	●	●	●	●
	Electrical Remote Control Mirrors with Internal Heater	OP	OP	—	—

*8 : New Zealand Only
*9 : RDS : Radio Data System
*10 : Except for New Zealand
*11 : SRS : Supplemental Restraint System

MO

MODEL CODE

ACM20	L	–	A	N	S	D	K	W
1	2		3	4	5	6	7	8

	BASIC MODEL CODE
1	ACM20 : With 1AZ-FE Engine CLM20 : With 1CD-FTV Engine

	STEERING WHEEL POSITION
2	L : Left-Hand Drive R : Right-Hand Drive

	MODEL NAME
3	A : AVENSIS VERSO / PICNIC

	SEATING CAPACITY
4	N : 6 R : 7

	GEAR SHIFT TYPE
5	M : 5-Speed Manual, Floor S : 4-Speed Automatic, Column

	GRADE
6	D : — E : —

	ENGINE SPECIFICATION
7	K : DOHC and EFI Y : Common-Rail Diesel

	DESTINATION
8	W : Europe Q : Australia Blank : General Countries

MODEL LINE-UP

DESTINATION	ENGINE	SEATING CAPACITY	TRANSMISSION		
			5-Speed Manual		4-Speed Automatic
			E356	E355	U241E
Europe	1AZ-FE	6	ACM20L-ANMDKW	—	ACM20L-ANSDKW
			ACM20R-ANMDKW	—	ACM20R-ANSDKW
		7	ACM20L-ARMDKW	—	ACM20L-ARSDKW
			ACM20R-ARMDKW	—	ACM20R-ARSDKW
	1CD-FTV	6	—	CLM20L-ANMDYW	—
			—	CLM20R-ANMDYW	—
		7	—	CLM20L-ARMDYW	—
			—	CLM20R-ARMDYW	—
Australia	1AZ-FE	7	ACM20R-ARMEKQ	—	ACM20R-ARSEKQ
General Countries	1AZ-FE	7	—	—	ACM20R-ARSEK

AVENSIS VERSO

OUTLINE OF NEW FEATURES

The following changes are made for the new Avensis Verso.

1. Model Line-up

- The 1AZ-FE engine has been discontinued and the 2AZ-FE engine has been introduced on the models for Australia.
- The 6-passenger right-hand drive (RHD) model for Europe has been discontinued.

2. Exterior

- The designs of the front bumper have been changed.
- The designs of the headlights have been changed.
- The designs of the rear combination lights have been changed.
- The design of the 16-inch aluminum disc wheel has been changed.
- The following exterior colors have been added:

Added Color No.	Added Color Name
1D4	Silver Metallic
202	Black
3Q3	Dark Red Mica Metallic
580	Yellow Mica Metallic
8K2	Light Purplish Blue Mica Metallic
8M6	Blue Mica

3. 1AZ-FE Engine

- The camshafts have been changed to those with different operating angles in order to improve fuel economy.
- An ETCS-i (Electronic Throttle Control System-intelligent) function has been adopted. Accordingly, an electronic throttle body with a built-in Hall IC type throttle position sensor has been adopted.
- In accordance with the adoption of the ETCS-i function, a linear type accelerator position sensor has been adopted.
- The alternator has been changed to a segment conductor type.
- The models for Europe have adopted injectors with improved atomization of fuel in order to comply with the STEP IV exhaust emission regulations.
- To comply with the exhaust emission regulations, the number of startup converters (TWC) has been changed from two to one, and an under floor catalyst has been added.
- The number of the air fuel ratio sensor and the oxgen sensor become one.
- SLLC (Super Long Life Coolant) has been newly provided.

4. 2AZ-FE Engine

The 2AZ-FE engine has been newly provided on the models for Australia.

5. 1CD-FTV Engine

SLLC (Super Long Life Coolant) has been newly provided.

6. Shock Absorber

- On all models, the linear control valves of the shock absorbers have been changed to the multi-leaf type linear control valve.
- This shock absorber generates the damping force in the extremely low piston speed range in order to realize a flat ride comfort.

7. Brake

- The brake control system (ABS with EBD, brake assist, TRC, and VSC) has been newly adopted as optional equipment on the models fur Europe.
- To control VSC, braking control has been adopted under the conditions in which the limitations of the tires are not exceeded.
- A mechanical type brake assist has been newly provided as standard equipment on the models without the VSC system. Also, a compact and lightweight actuator has been adopted.
- The brake control system (ABS with EBD, brake assist, TRC, and VSC) uses CAN communication.

8. Seat

- Sports seats have been newly provided as standard equipment for the front seat on the models for Australia in order to improve the comfort.
- A headrest has been provided as standard equipment on the center rear seat on the models for Australia and general countries.
- Top tether anchors have been provided for the rear No. 1 seat.

9. Multiplex Communication

CAN communication has been adopted in the brake control system (ABS with EBD, brake assist, TRC and VSC).

10. Combination Meter

- An Optitron display type combination meter has been newly provided as standard equipment on the models for Europe and general countries. The optitron display type meter realizes excellent visibility through the use of smoke acrylic in the protective panel, and LEDs (Light Emitting Diodes) that is vary bright and has high contrast for illuminating the indicator and the dial.
- A VSC warning light, SLIP indicator, and a TRC OFF indicator have been added on the models for Europe equipped with VSC.
- A cruise MAIN indicator light has been added on the model for Australia.

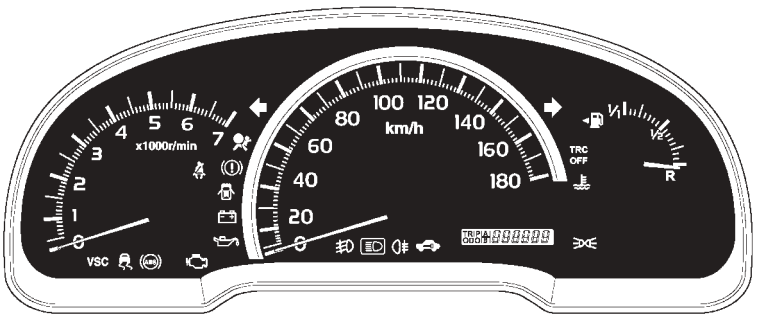

Model for Europe Equipped with VSC

258AS32

11. Air Conditioner

- An automatic air conditioner has been newly provided as standard equipment on the right-hand drive (RHD) models for Europe and general countries.
  An automatic air conditioner has been made newly available as optional equipment on the left-hand drive (LHD) models for Europe.
- A humidity control automatic air conditioner has been newly provided as standard equipment on the models for Australia.
- A variable-capacity compressor has been newly adopted on the models for Australia in order to reduce energy consumption.
- The temperature-humidity integrated sensor has been adopted on the models for Australia.
- In accordance with the adoption of the automatic air conditioner, the solar sensor has been adopted on all models.

12. Navigation System

The navigation system on the models for Europe has been updated with the addition of new function.

13. Engine Immobilizer System

On all models, the transponder key ECU controls the engine immobilizer system by communicating with the Engine ECU. Also, the encoding of the ID in the ignition key and the ID stored in the transponder key ECU has been changed from the conventional fixed encoding to an encrypted encoding type. As a result, the theft deterrence performance has been improved.

14. Cruise Control System

A cruise control system has been newly provided as standard equipment on the models for Australia.

15. Outside Rear View Mirror

Power-retracting type mirrors coated with blue hydrophilic film have been provided as standard equipment on the models for general countries.

16. Audio System

- A glass antenna has been newly provided as standard equipment on all models.
- The audio systems listed below have been newly adopted as optional equipment.

Design	Specifications	Application
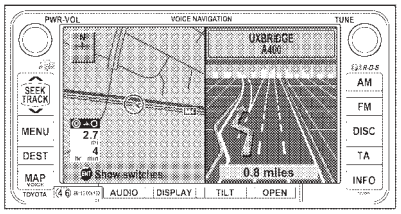 251EQ01	● LCD type ● AM/FM Tuner ● DVD Player ● CD Player ● RDS-TMC* ● 6-speaker System ● Manufacturer: AISIN AW	Europe: option
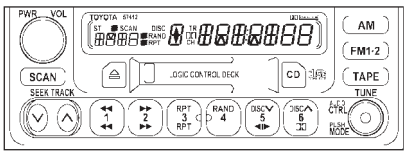 251EQ02	● AM/FM Tuner ● Cassette Player ● 6-speaker System ● Manufacturer: Panasonic	Australia, General Countries : option

*: Radio Data System – Traffic Message Channel

- Steering pad switches have been made newly available as optional equipment on the models for Europe. The audio control switches with high frequency use have been located on the steering wheel in the form of steering pad switch to improve the ease of use.

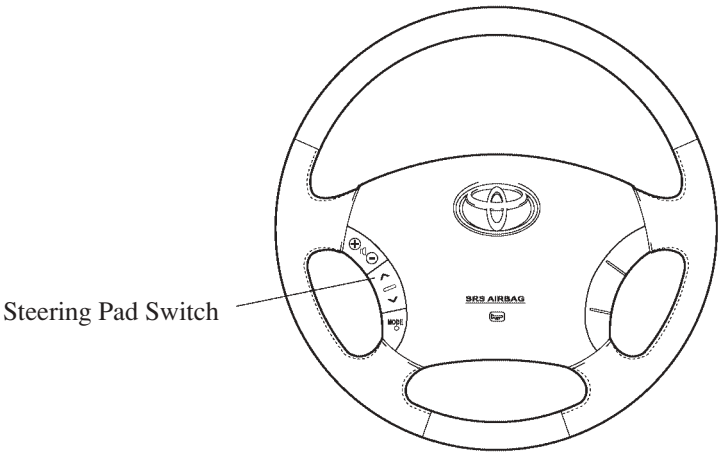

258AS09

4

MODEL CODE

ACM20 R – A R S D K W

1 2 3 4 5 6 7 8

1 BASIC MODEL CODE

CODE	DRIVE TYPE	ENGINE
ACM20	2WD	1AZ-FE
ACM21		2AZ-FE
CLM20		1CD-FTV

2 STEERING WHEEL POSITION

L : Left-Hand Drive
R : Right-Hand Drive

3 MODEL NAME

A : Avensis Verso

4 SEATING CAPACITY

N : 6-passenger
R : 7-passenger

5 GEAR SHIFT TYPE

M: 5-Speed Manual, Floor
S : 4-Speed Automatic, Column

6 GRADE

D : —
E : —

7 ENGINE SPECIFICATION

K : DOHC and EFI
Y : Common-Rail Diesel

8 DESTINATION

W: Europe
Q : Australia
Blank: General Countries

MODEL LINE-UP

: New

DESTIN-ATION	ENGINE	SEATING CAPACITY	TRANSAXLE		
			5-Speed Manual		4-Speed Automatic
			E356	E355	U241E
Europe	1AZ-FE	6	ACM20L-ANMDKW	—	ACM20L-ANSDKW
		7	ACM20L-ARMDKW	—	ACM20L-ARSDKW
			ACM20R-ARMDKW	—	ACM20R-ARSDKW
	1CD-FTV	6	—	CLM20L-ANMDYW	—
		7	—	CLM20L-ARMDYW	—
			—	CLM20R-ARMDYW	—
Australia	2AZ-FE	7	—	—	ACM21R-ARSEKQ
General Countries	1AZ-FE	7	—	—	ACM20R-ARSEK

4

NEW FEATURES

■EXTERIOR

1. Front View

- The design of the front bumper has been changed. A sportier style with a commanding presence has been achieved.
- The design of the headlights has been changed in order to express a sharper and wider look.

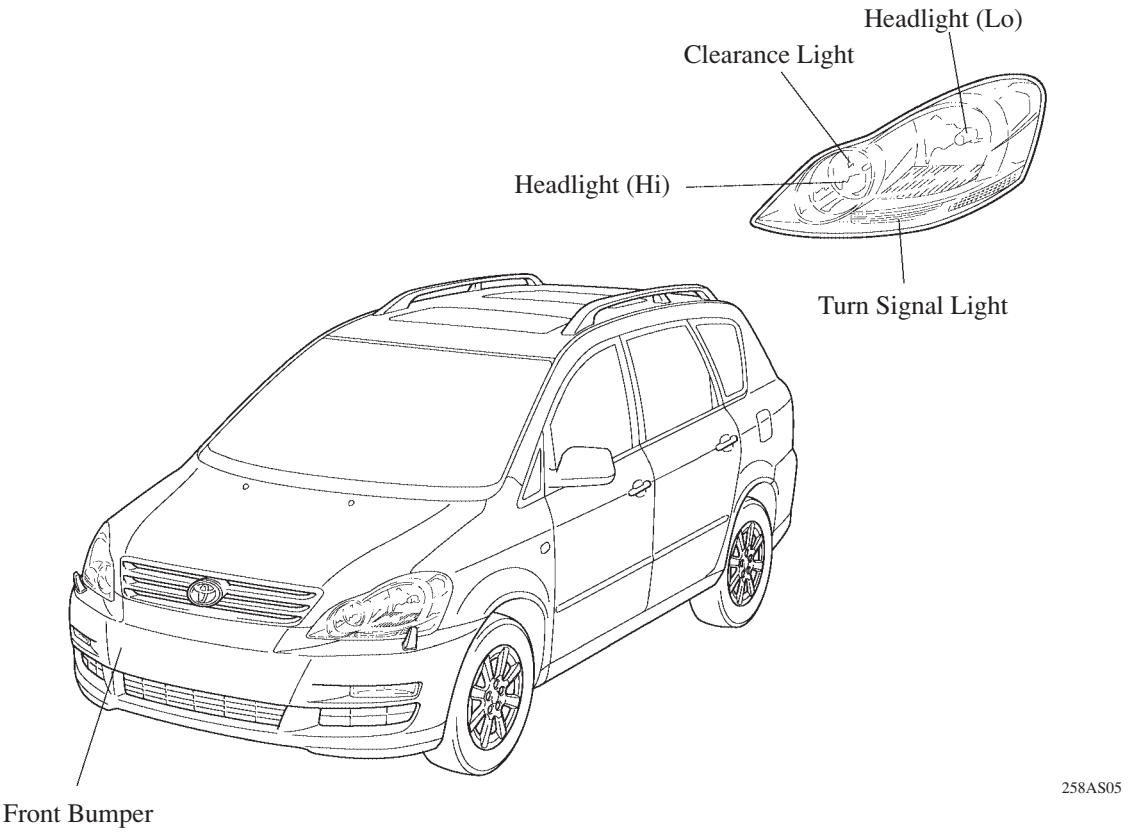

New

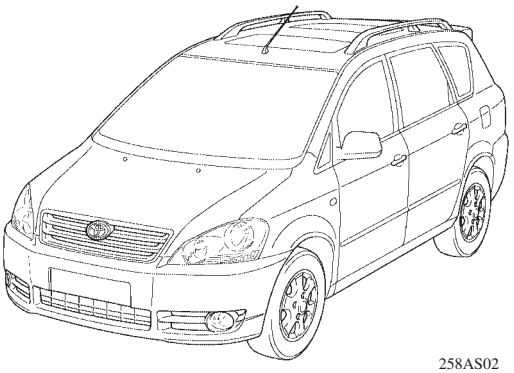

Previous

2. Rear View

- The design of the rear combination lights has been changed to achieve a high-quality style.

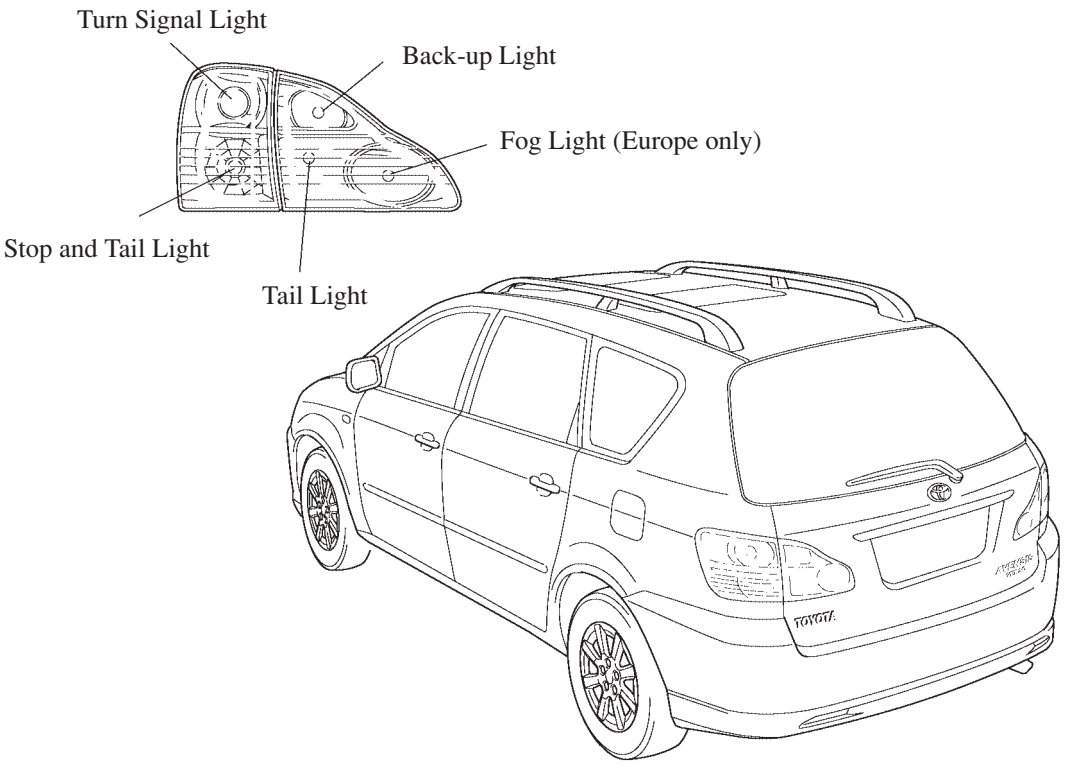

258AS03

New

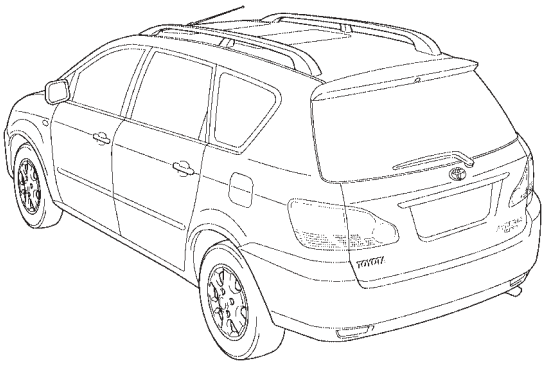

258AS04

Previous

3. Tire and Disc Wheel

- On all modes, the design of the aluminum disc wheel has been changed.

Tire Size		205/60R16
Disc Wheel Size		16 x 6 1/2JJ
Disc Wheel Material		Aluminum
P.C.D.*	mm (in.)	114.3 (4.5)
Off Set	mm (in.)	45 (1.8)
Wheel Design		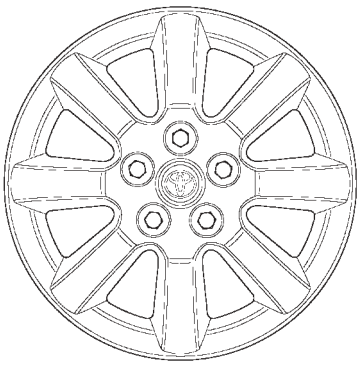 258AS06

*: Pitch Circle Diameter

■1AZ-FE ENGINE

1. Major Difference (from previous 1AZ-FE Engine)

Item	Outline
Destination	Europe & General Countries
Valve Mechanism	● The cam profile has been changed in conjunction with the change in the valve timing.
Cooling System (See Page 157)	● SLLC (Super Long Life Coolant) has been adopted.
Intake and Exhaust System (See Page 158)	● An electronic throttle body with a built-in no-contact type throttle position sensor and a throttle control motor has been adopted. ● The exhaust system has been revised to optimize exhaust performance. In addition, the 2 TWCs located directly below the exhaust manifold have been integrated into 1 TWC, and a TWC has been added under the floor. ● The ceramic type TWC has been adopted directly below the exhaust manifold and under floor.
Fuel System (See Page 160)	● The compact 12-hole type injector with high atomizing performance has been adopted.
Charging System (See Page 161)	● A segment conductor type alternator has been adopted.
Engine Control System (See Page 163)	● The ETCS-i (Electronic Throttle Control System-intelligent) has been adopted. ● A planar type air-fuel ratio sensor has been adopted. ● A flat type knock sensor has been adopted. ● A contact type accelerator pedal position sensor has been adopted. ● A no-contact type throttle position sensor has been adopted. ● The number of the air fuel ratio sensor and the oxygen sensor become one.

▶ Engine Specifications ◀

Model				New	Previous
No. of Cyli. & Arrangement				4-Cylinder, Inline	←
Valve Mechanism				16-Valve DOHC, Chain Drive	←
Combustion Chamber				Pentroof Type	←
Manifolds				Cross-Flow	←
Fuel System				EFI	←
Ignition System				DIS	←
Displacement cm^3 (cu. in.)				1998 (121.9)	←
Bore & Stroke mm (in.)				86.0 x 86.0 (3.39 x 3.39)	←
Compression Ratio		Unleaded Gasoline		9.8 : 1	←
Max. Output (EEC)		Unleaded Gasoline		110 kW @ 6000 rpm	←
Max. Torque (EEC)		Unleaded Gasoline		192 N·m @ 4000 rpm	←
Valve Timing	Intake	Unleaded Gasoline	Open	3° – 43° BTDC	–4° – 46° BTDC
			Close	60° – 20° ATDC	60° – 10° ATDC
	Exhaust		Open	37° BBDC	45° BBDC
			Close	3° ATDC	←
Fuel Octane Number RON		Unleaded Gasoline		95 or Higher	←
Oil Grade				API SL, EC or ILSAC	API SJ, EC or ILSAC
Emission Regulation				European STEP IV	European STEP III

2. Cooling System

Super Long Life Coolant

The TOYOTA genuine Super Long Life Coolant (SLLC) has been adopted. As a result, the maintenance interval has been extended.

▶ Specifications ◀

Model			New	Previous
Engine Coolant	Capacity liters (US qts, Imp.qts)	with front heater	6.8 (7.2, 6.0)	←
		with front & rear heater	7.5 (7.9, 6.6)	
		without heater	5.9 (6.2, 5.2)	
	Type		TOYOTA Genuine SLLC	TOYOTA Genuine LLC
	Color		Pink	Red
	Maintenance Intervals for Europe	First time	160,000 km (100,000 mile)	60,000 km (37,500 mile)
		Subsequent	Every 80,000 km (50,000 mile)	Every 30,000 km (18,000 mile)
	Maintenance Interval for General Countries	Replace at first time	160,000 km (100,000 mile)	Replace Every 40,000 km (25,000 mile) or 24 months Whichever comes first.
		Replace at first time subsequent	Every 80,000 km (50,000 mile)	
Thermostat	Operating Temperature °C (°F)		80 – 84 (176 – 183)	←

- SLLC is pre-mixed (50% coolant and 50% distilled water), so no dilution is needed when adding or replacing SLLC in the vehicle.
- If LLC is mixed with LLC, the interval for LLC (every 30,000 km (18,000 mile) for Europe model/40,000 km (25,000 mile) or 24 months whichever comes first for General Countries model) should be used.
- You can also apply the new maintenance interval (every 30,000 km (18,000 mile) for Europe model/40,000 km (25,000 mile) or 24 months whichever comes first for General Countries model) to vehicle initially filled with LLC (red-colored), if you use SLLC (pink-colored) for the coolant change.

3. Intake and Exhaust System

Throttle Body

- A DC motor with excellent response and minimal power consumption is used for the throttle control motor. The engine ECU performs the duty ratio control of the direction and the amperage of the current that flows to the throttle control motor in order to regulate the opening angle of the throttle valve.
- The link-less type throttle body has adopted and it realizes excellent throttle control.
  For details of ETCS-i control, refer to page 174.

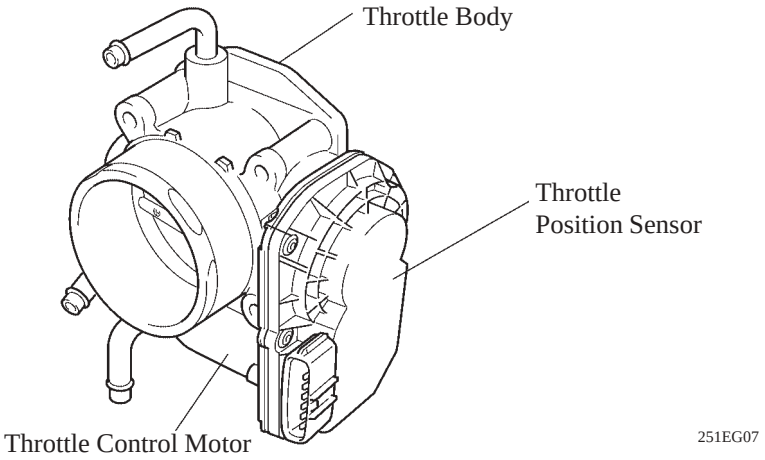

Exhaust Manifold

- To comply with the STEP-IV exhaust emission regulations in Europe, the number of startup converters (TWC) has been changed from two to one, and the warm-up performance of the catalyst has been improved, in order to reduce the exhaust emissions during the starting of the engine.
- The exhaust manifold has been changed from the unequal-length to an equal-length type, in order to improve performance in the low- to medium-speed range and fuel economy in the high-speed range.

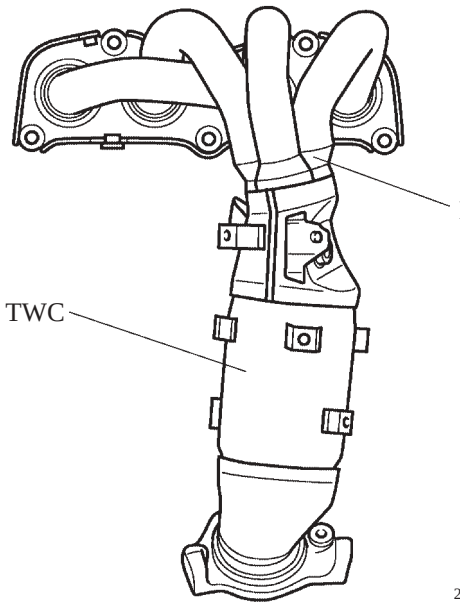

New

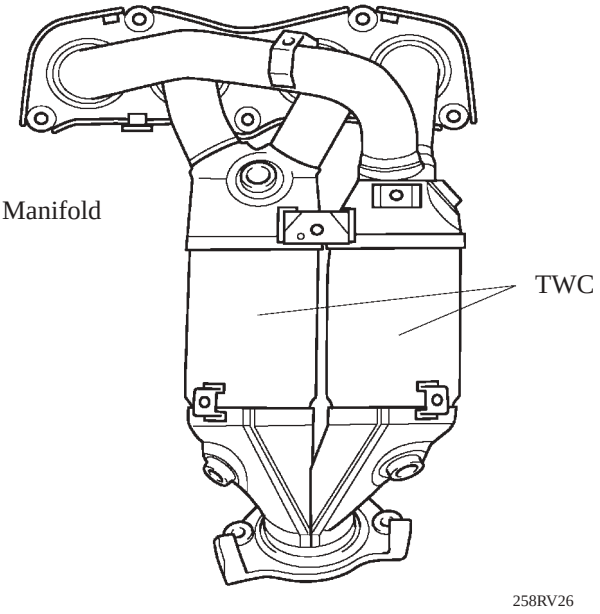

Previous

Three-Way Catalytic Converter

- The ceramic type TWC (Three-Way Catalytic Converter) has been adopted directly below the exhaust manifold and under floor. This TWC enables to improve in reducing the amount of exhaust emissions by optimizing the cell's density and wall thickness.

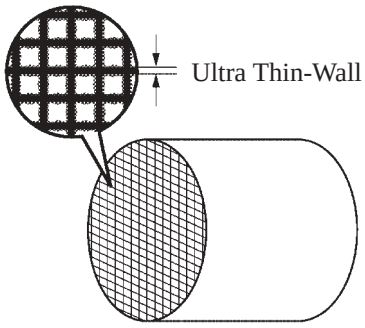

198EG06

Exhaust Pipe

- To comply with the Step-IV exhaust emission regulations, the exhaust pipe system on the models for Europe has adopted an under floor catalyst, and a dual pipe construction in the pipe upstream of the catalyst.

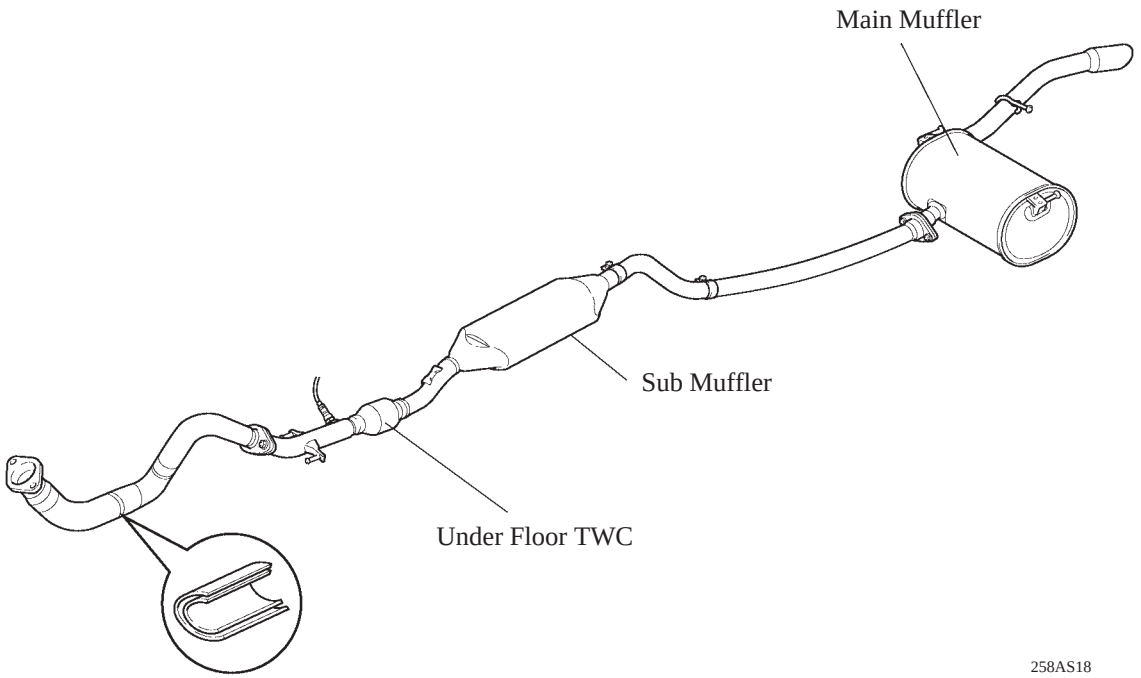

258AS18

4. Fuel System

Fuel Injector

- An injector, based on the compact 12-hole type injector of the previous model, with moving parts that have been made lightweight and the magnetic circuit optimized performance has been adopted.
- The injector nozzle has been placed closer to the orifice, which reducing the distance between the injector and the intake valve. This reduces the amount of fuel that adheres to the intake port, which improves fuel economy and reduces exhaust emissions.
- The diameter of the new injector orifice has been increased from 0.18 mm (0.0071 in.) to 0.20 mm (0.0079 in.) because a slight increase in the orifice diameter improves the injection angle and facilitates the instantaneous mixture of fuel with air. This promotes the atomization of fuel into a fine mist.
- The orifice of the new injector has been changed from the straight type to the taper type. As a result, the fuel supply efficiency has been increased in order to ensure the reliable supply of fuel into the combustion chamber.

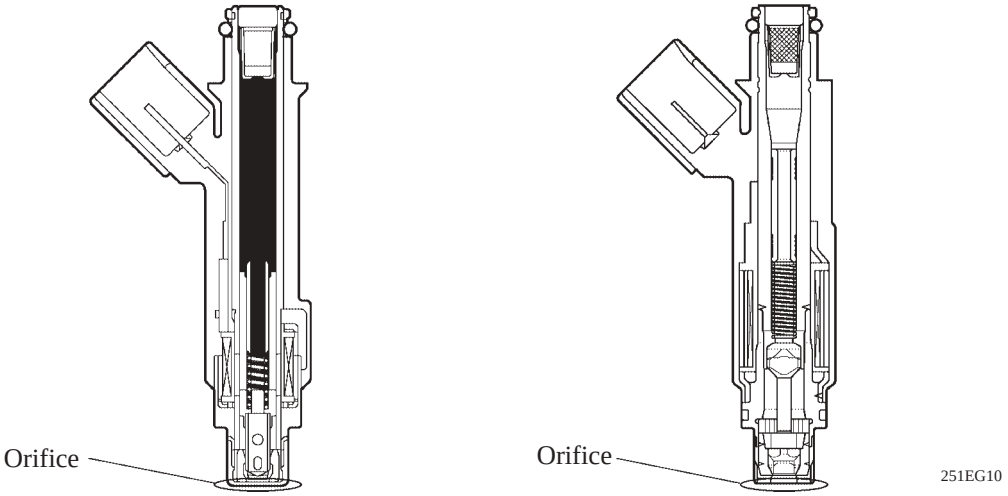

New **Previous**

New	Previous
0.2 mm (0.0079 in.) 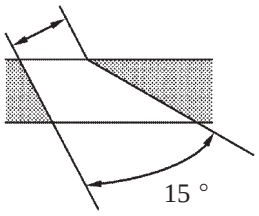 251EG04	0.18 mm (0.0071 in.) 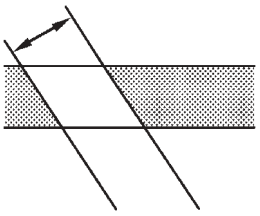 251EG05

5. Charging System

General

- Instead of the conventional type alternator, a compact and lightweight segment conductor type alternator has been adopted for 1AZ-FE engine model. This type of alternator generates high amperage output in a highly efficient manner.
- This alternator has a joined segment conductor system, in which multiple segment conductors are welded together to form the stator. Compared to the conventional winding system, the electrical resistance is reduced due to the shape of the segment conductors, and their arrangement helps to make the alternator more compact.

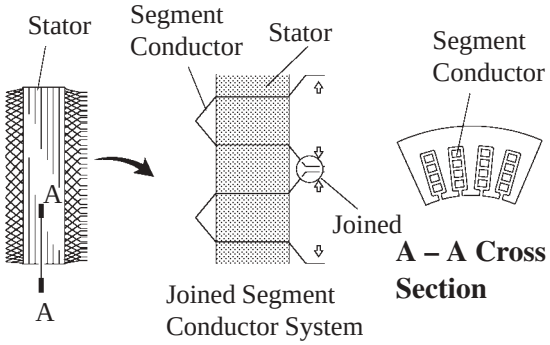

Segment Conductor Type Alternator

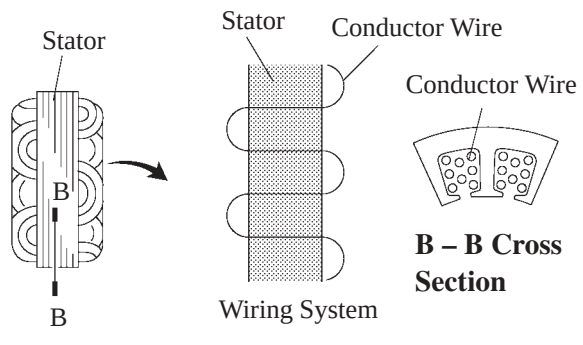

Conventional Type Alternator

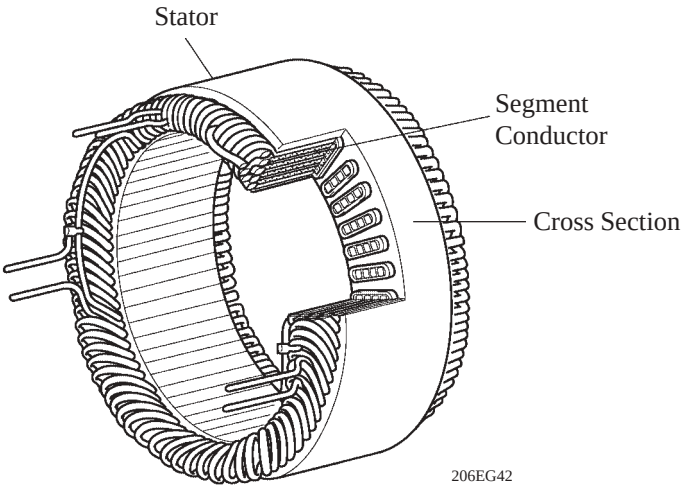

Stator of Segment Conductor Type Alternator

▶ Specifications ◀

Type	Segment Conductor (SE0)
Rated Voltage	12 V
Output Rated	100 A
Initial Output Starting Speed	1500 rpm Max.

▶ Wiring Diagram ◀

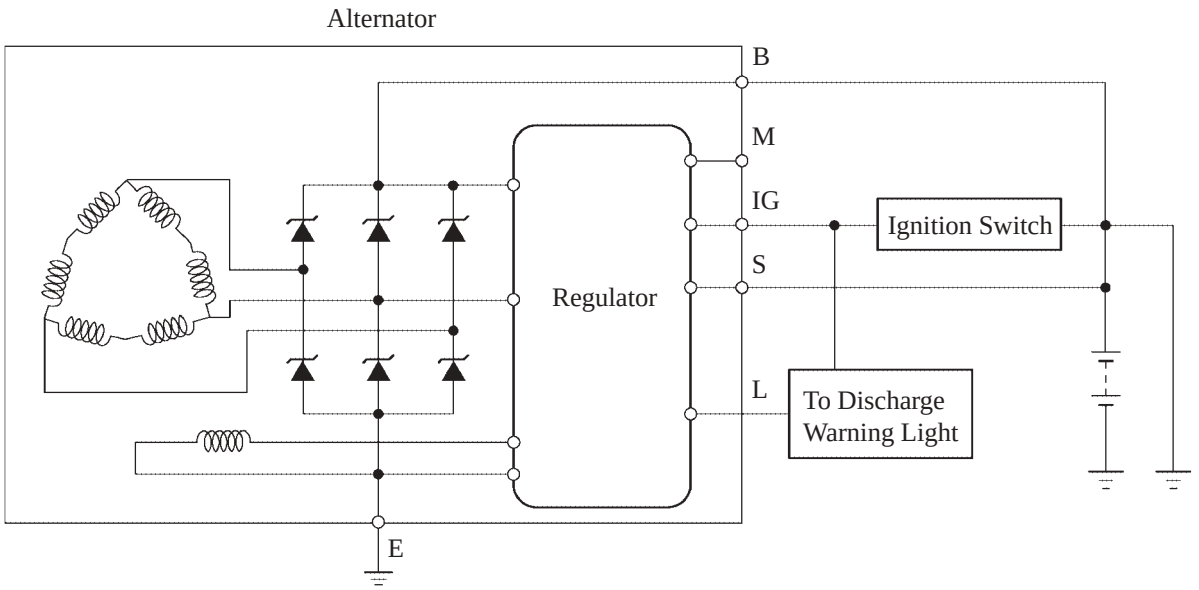

251EG03

6. Engine Control System

General

The engine control system of the 1AZ-FE engine of the new Avensis Verso has following system.

System	Outline	New	Previous
EFI (Electronic Fuel Injection)	An L-type EFI system directly detects the intake air mass with a hot wire type mass air flow meter.	○	○
ESA (Electronic Spark Advance)	Ignition timing is determined by the engine ECU based on signals from various sensors. The engine ECU corrects ignition timing in response to engine knocking.	○	○
ETCS-i (Electronic Throttle Control System-intelligent) (See page 174)	● Optimally controls the throttle valve opening in accordance with the amount of accelerator pedal effort and the condition of the engine and the vehicle. ● A link-less type is used, without an accelerator cable. ● A contact type accelerator pedal position sensor is provided on the accelerator pedal. ● A no-contact type throttle position sensor and accelerator pedal position sensor are used. ● Controls the fast idle and idle speed.	○	—
VVT-i (Variable Valve Timing-intelligent)	Controls the intake camshaft to an optimal valve timing in accordance with the engine condition.	○	○
Air Fuel Ratio Sensor, Oxygen Sensor Heater Control	Maintains the temperature of the air fuel ratio sensor or oxygen sensor at an appropriate level to increase accuracy of detection of the oxygen concentration in the exhaust gas.	○	○
Air Conditioner Cut-off Control*	By turning the air conditioning compressor ON or OFF in accordance with the engine condition, drivability is maintained.	○	○
Cooling Fan Control System	Radiator cooling fan operation is controlled by water temperature sensor signal (THW) and the condition of the air conditioner operation.	○	○
Fuel Pump Control	Fuel pump operation is controlled by signal from the engine ECU.	○	○
	A fuel cut control is adopted to stop the fuel pump when the airbag is deployed during front or side collision.	○	○
Evaporative Emission Control	The engine ECU controls the purge flow of evaporative emission (HC) in the charcoal canister in accordance with engine conditions.	○	○
Engine Immobilizer	Prohibits fuel delivery and ignition if an attempt is made to start the engine with an invalid ignition key.	○	○
	The ID code stored in the transponder key ECU is compared with that of the transponder tip in the ignition key.	○	—
Diagnosis	When the engine ECU detects a malfunction, the engine ECU diagnoses and memorizes the failed section.	○	○
	All the DTCs (Diagnostic Trouble Codes) have been made to correspond to the SAE controlled codes.	○	—
Fail-Safe	When the engine ECU detects a malfunction, the engine ECU stops or controls the engine according to the data already stored in the memory.	○	○

*: With Air Conditioner Models.

Construction

The configuration of the engine control system in the 1AZ-FE of the new Avensis Verso is as shown in the following chart.

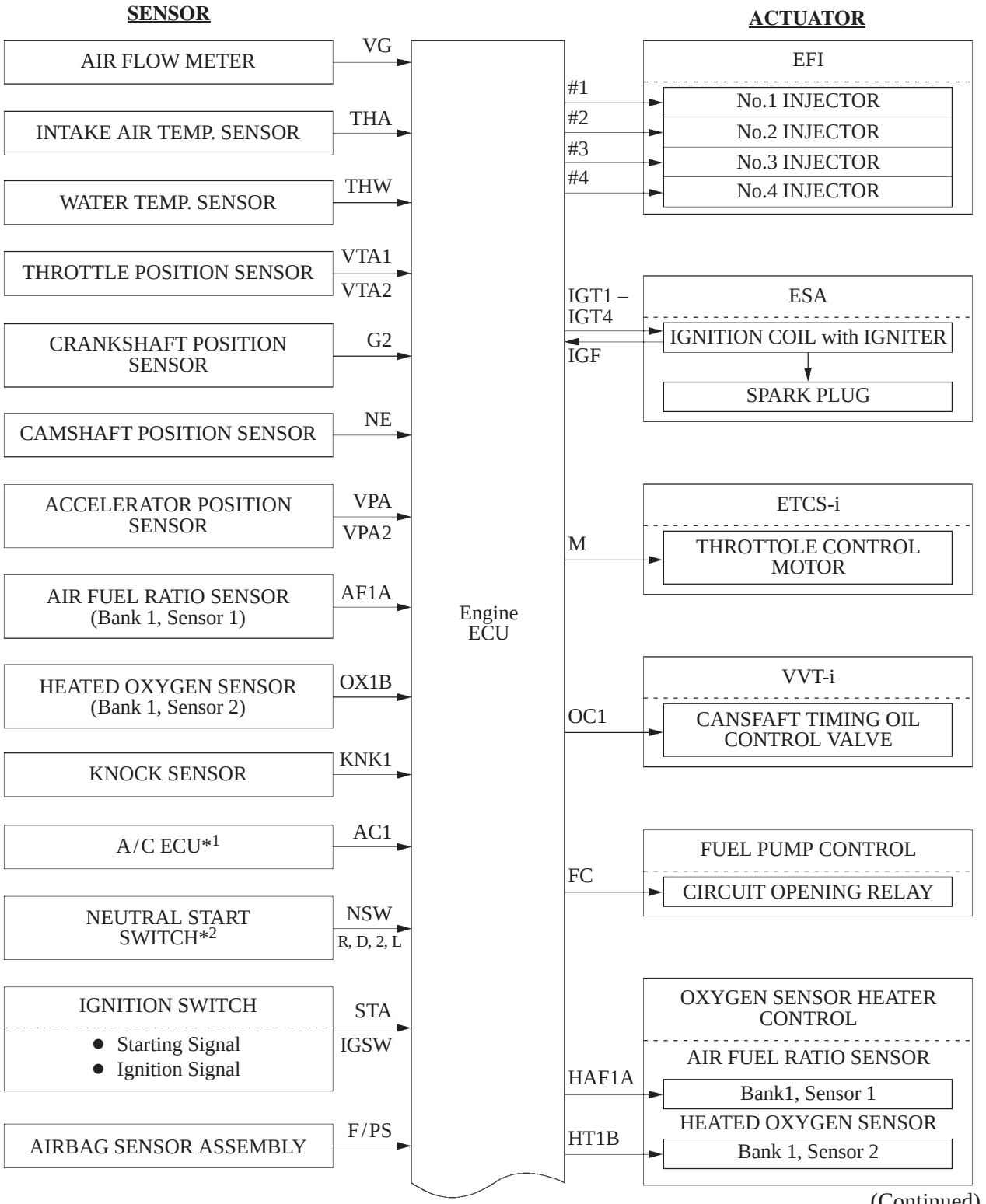

(Continued)

258AS36

*1: With Air Conditioner

*2: Only for Automatic Transaxle

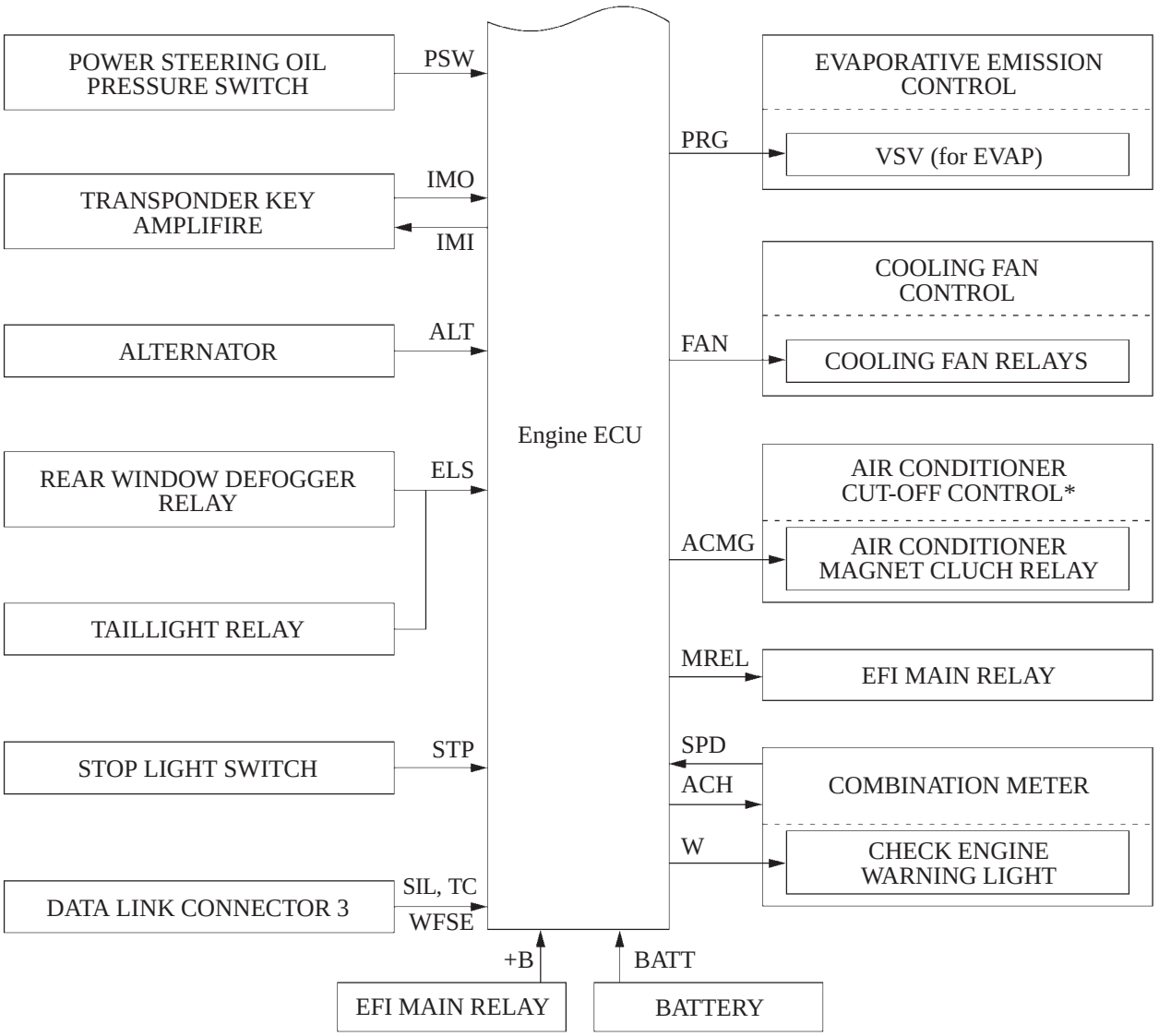

258AS37

*: With Air Conditioner

4

Engine Control System Diagram

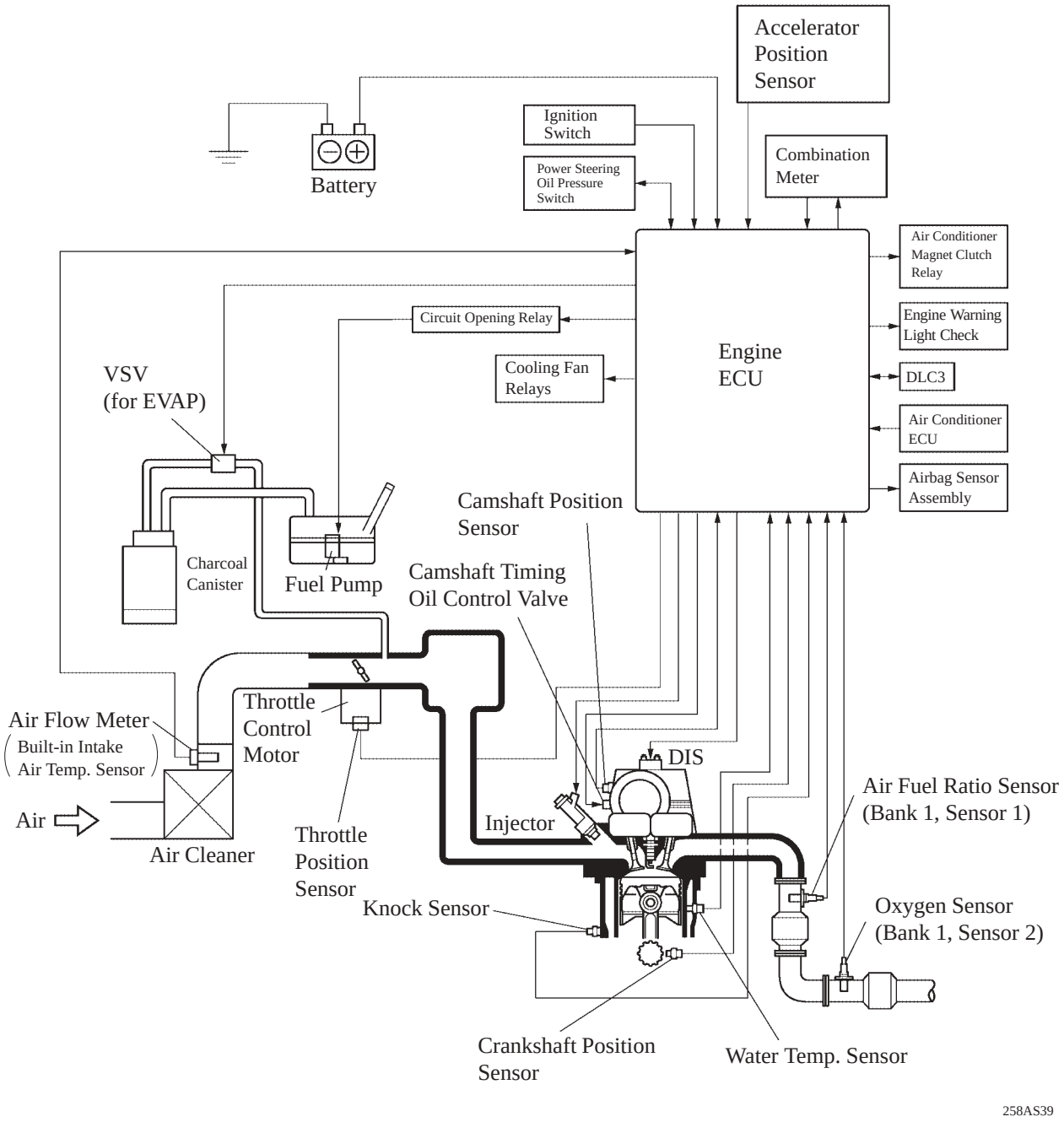

Layout of Main Components

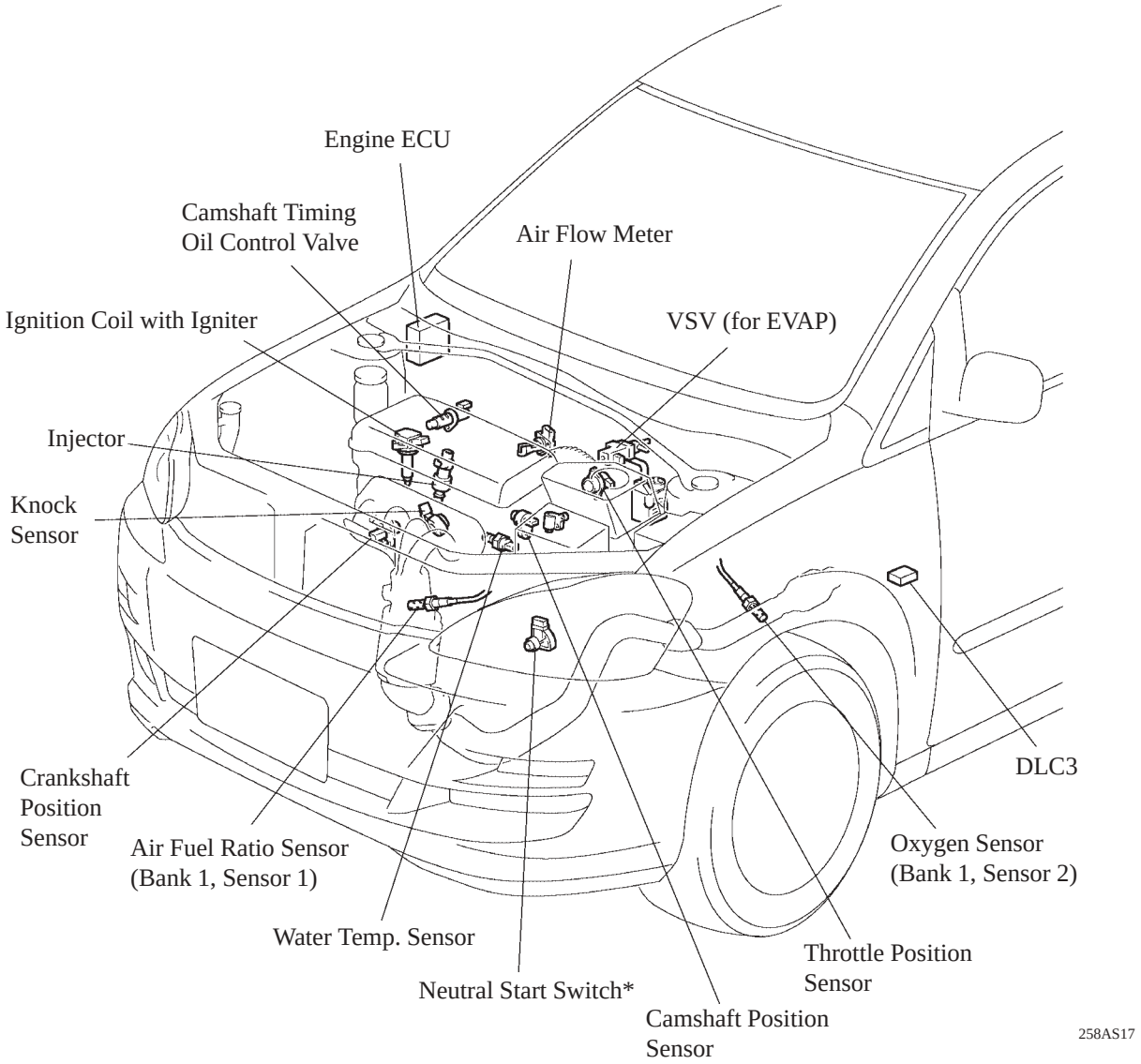

*: Only for Automatic Transaxle

Main Components of Engine Control System

1) General

The following table compares the main components for new and previous 1AZ-FE engine.

Components	New		Previous	
	Outline	Quantity	Outline	Quantity
Engine ECU	32-bit CPU	1	←	1
Air Fuel Ratio Sensor (Bank 1, Sensor 1)	with Heater Type (Planar Type)	1	with Heater Type (Cup Type)	2
Oxygen Sensor (Bank 1, Sensor 2)	with Heater Type (Cup Type)	1	←	2
Air Flow Meter	Hot-wire Type	1	←	
Crankshaft Position Sensor (Rotor Teeth)	Pick-up Coil Type (36-2)	1	←	
Camshaft Position Sensor (Rotor Teeth)	Pick-up Coil Type (3)	1	←	
Knock Sensor	Built-in Piezoelectric Element Type (Flat Type)	1	Built-in Piezoelectric Element Type (Resonant Type)	1
Accelerator Pedal Position Sensor	Contact Type	1	—	
Throttle Position Sensor	No-contact Type	1	Contact Type	1

2) Air Fuel Ratio Sensor (Planar Type)

The planar type of air fuel ratio sensor has been adopted.
Compared to the conventional type, the sensor and heater portions of the planar type are narrower overall. Because the heat of the heater acts directly on the alumina and zirconia (of the sensor portion) it accelerates the activation of the sensor.

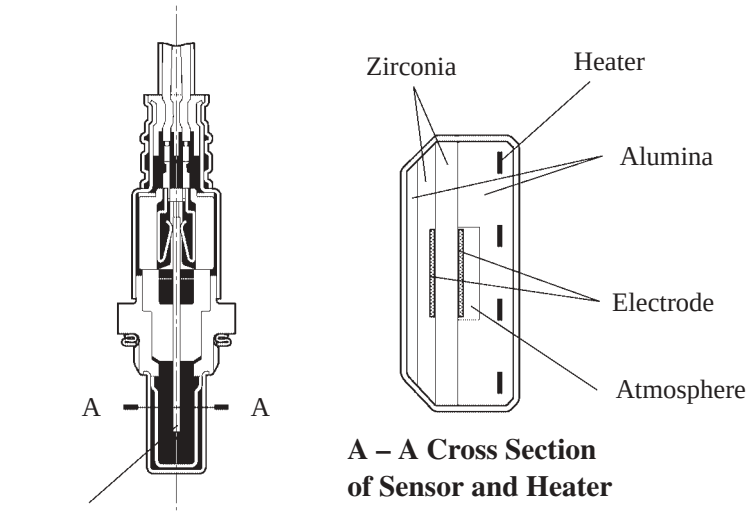

A – A Cross Section of Sensor and Heater

Air Fuel Ratio Sensor

238EG54

3) Knock Sensor (Flat Type)

a. General

In the conventional type knock sensor (resonant type), a vibration plate which has the same resonance point as the knocking frequency of the engine is built in and can detect the vibration in this frequency band.
On the other hand, a flat type knock sensor (non-resonant type) has the ability to detect vibration in a wider frequency band from about 6 kHz to 15 kHz, and has the following features.

- The engine knocking frequency will change a bit depending on the engine speed. The flat type knock sensor can detect the vibration even when the engine knocking frequency is changed. Thus the vibration detection ability is increased compared to the conventional type knock sensor, and a more precise ignition timing control is possible.

——— - ——— : Resonance Characteristic of Conventional Type

——————— : Resonance Characteristic of Flat Type

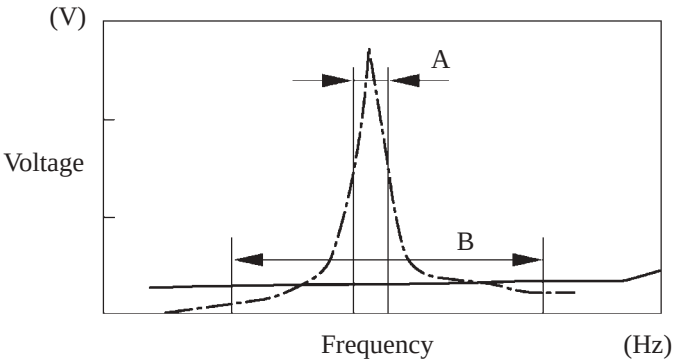

A: Detection Band of Conventional Type

B: Detection Band of Flat Type

Characteristic of Knock Sensor

214CE04

b. Construction

- The flat type knock sensor is installed on the engine through the stud bolt installed on the cylinder block. For this reason, a hole for the stud bolt is running through in the center of the sensor.
- Inside of the sensor, a steel weight is located on the upper portion and a piezoelectric element is located under the weight through the insulator.
- The open/short circuit detection resistor is integrated.

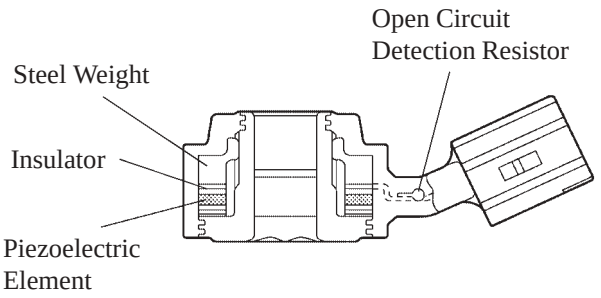

Flat Type Knock Sensor (Non-Resonant Type)

214CE01

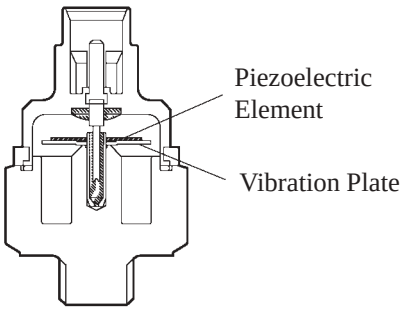

Conventional Type Knock Sensor (Resonant Type)

214CE02

c. Operation

The knocking vibration is transmitted to the steel weight and its inertia applies pressure to the piezoelectric element. The action generates electromotive force.

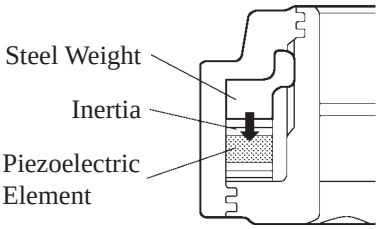

214CE08

d. Open/Short Circuit Detection Resistor

During the ignition is ON, the open/short circuit detection resistor in the knock sensor and the resistor in the engine ECU keep the voltage at the terminal KNK1 of engine constant.
An IC (Integrated Circuit) in the engine ECU is always monitoring the voltage of the terminal KNK1. If the open/short circuit occurs between the knock sensor and the engine ECU, the voltage of the terminal KNK1 will change and the engine ECU detects the open/short circuit and stores DTC (Diagnostic Trouble Code).

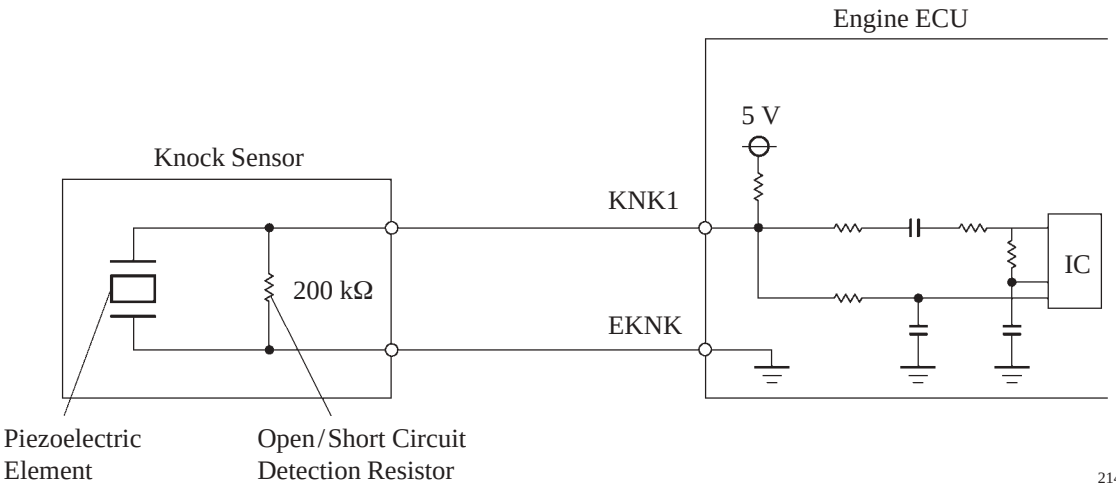

Service Tip

- In accordance with the adoption of open/short circuit detection resistor, the inspection method for the sensor has been changed.
- To prevent the water accumulation in the connector, make sure to install the flat type knock sensor in the position as illustration.

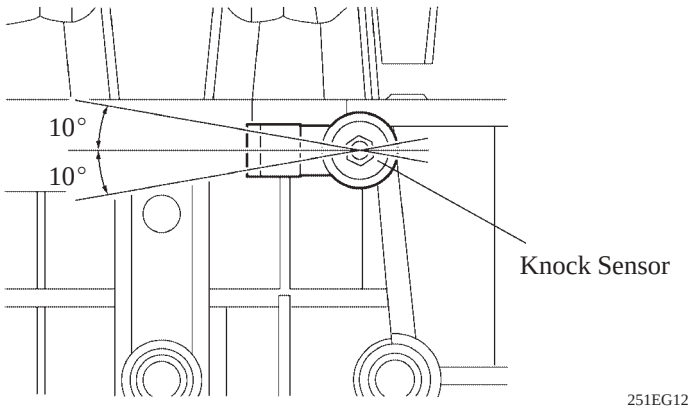

4) Accelerator Pedal Position Sensor

This sensor converts the accelerator pedal depressed angles into electric signals with two differing characteristics and outputs them to the engine ECU. One is the VPA1 signal that linearly outputs the voltage along the entire range of the accelerator pedal depressed angle. The other is the VPA2 signal that outputs on offset voltage.

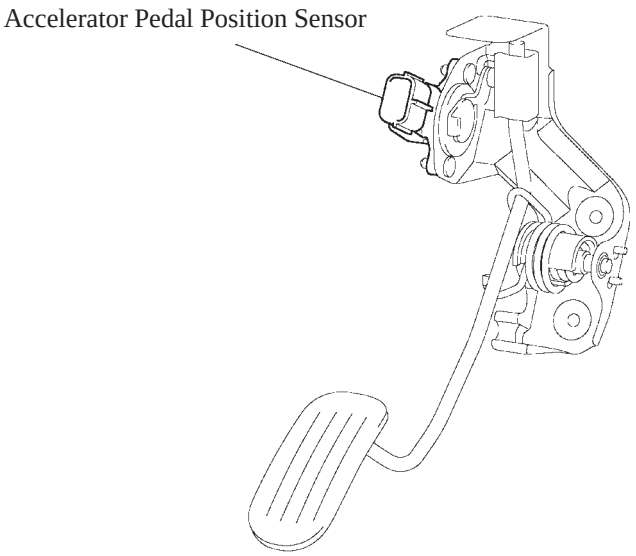

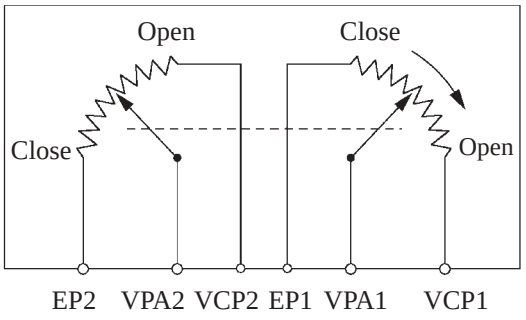

Accelerator Pedal Position Sensor

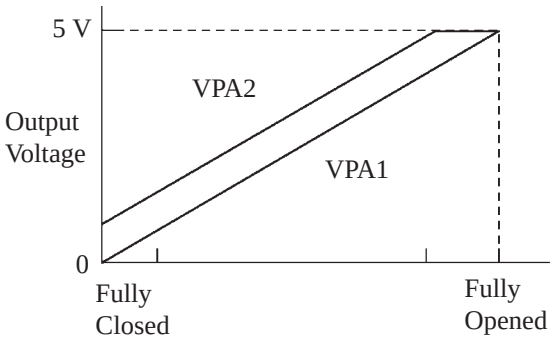

Accelerator Pedal Depressed Angle

258AS46

5) Throttle Position Sensor (Hall IC Type)

The throttle position sensor is mounted on the throttle body, to detect the opening angle of the throttle valve. The throttle position sensor converts the magnetic flux density that changes when the magnetic yoke (located on the same axis as the throttle shaft) rotates around the Hall IC into electric signals to operate the throttle control motor.

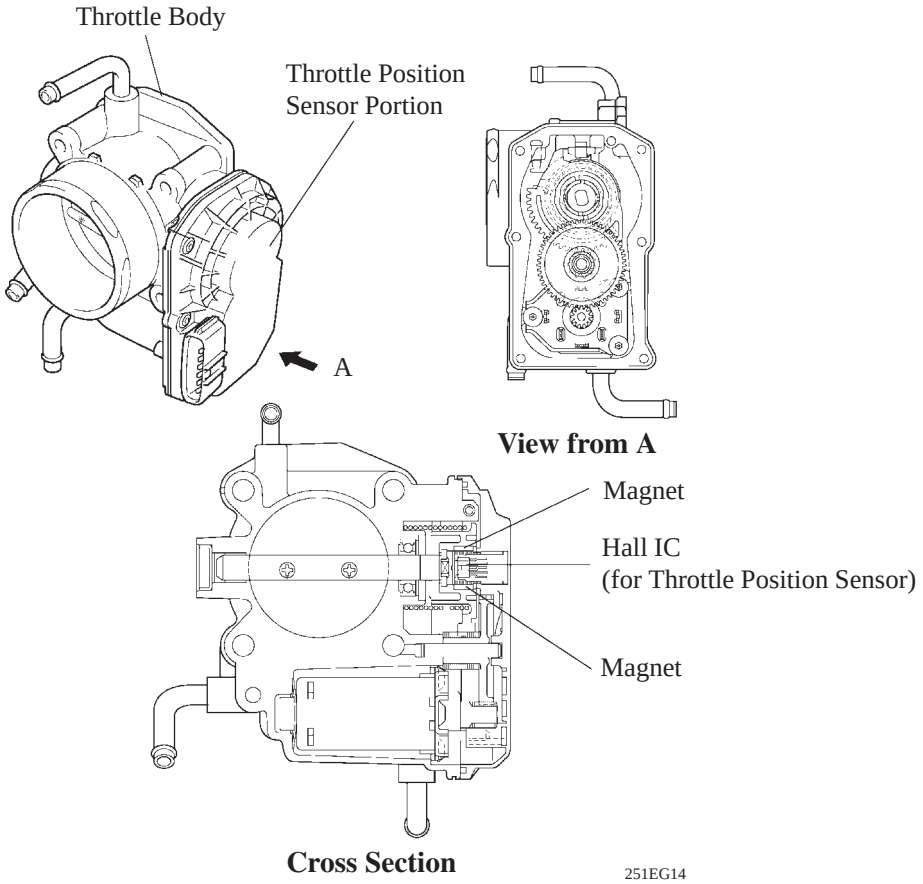

Throttle Position Sensor

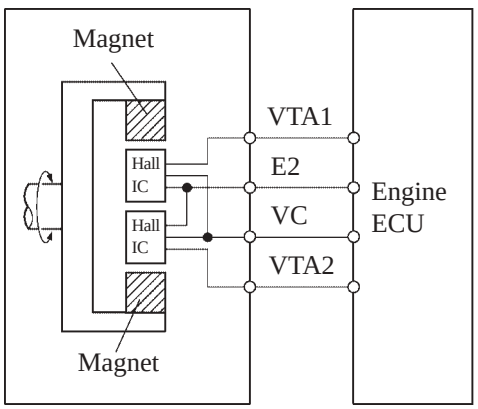

230LX12

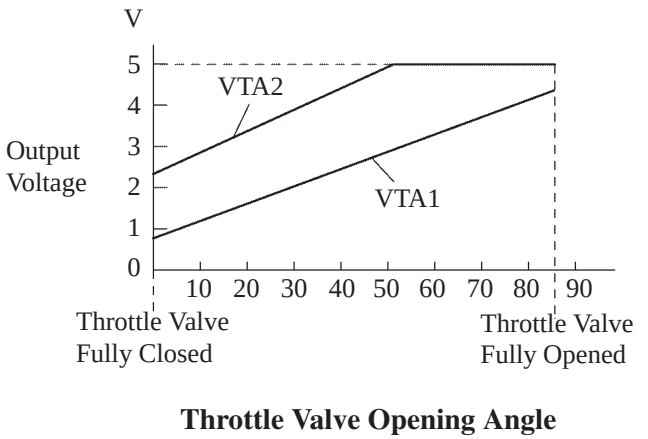

Throttle Valve Opening Angle

238EG79

Service Tip

The inspection method differs from the conventional throttle position sensor because this sensor uses a Hall IC.

ETCS-i (Electronic Throttle Control System-intelligent)

- The ETCS-i is used, providing excellent throttle control in all the operating ranges.
- In the conventional throttle body, the throttle valve opening in determined invariably by the amount of the accelerator pedal effort. In contrast, the ETCS-i uses the engine ECU to calculate the optimal throttle valve opening that is appropriate for the respective driving condition and uses a throttle control motor to control the opening.
- The contact type accelerator pedal position sensor has been adopted.
- The no-contact type throttle position sensor has been adopted.
- The ETCS-i controls the ISC (Idle Speed Control) system, the TRC (Traction Control) and the VSC (Vehicle Stability Control) system.
- In case of an abnormal condition, this system transfers to the limp mode.

▶ System Diagram ◀

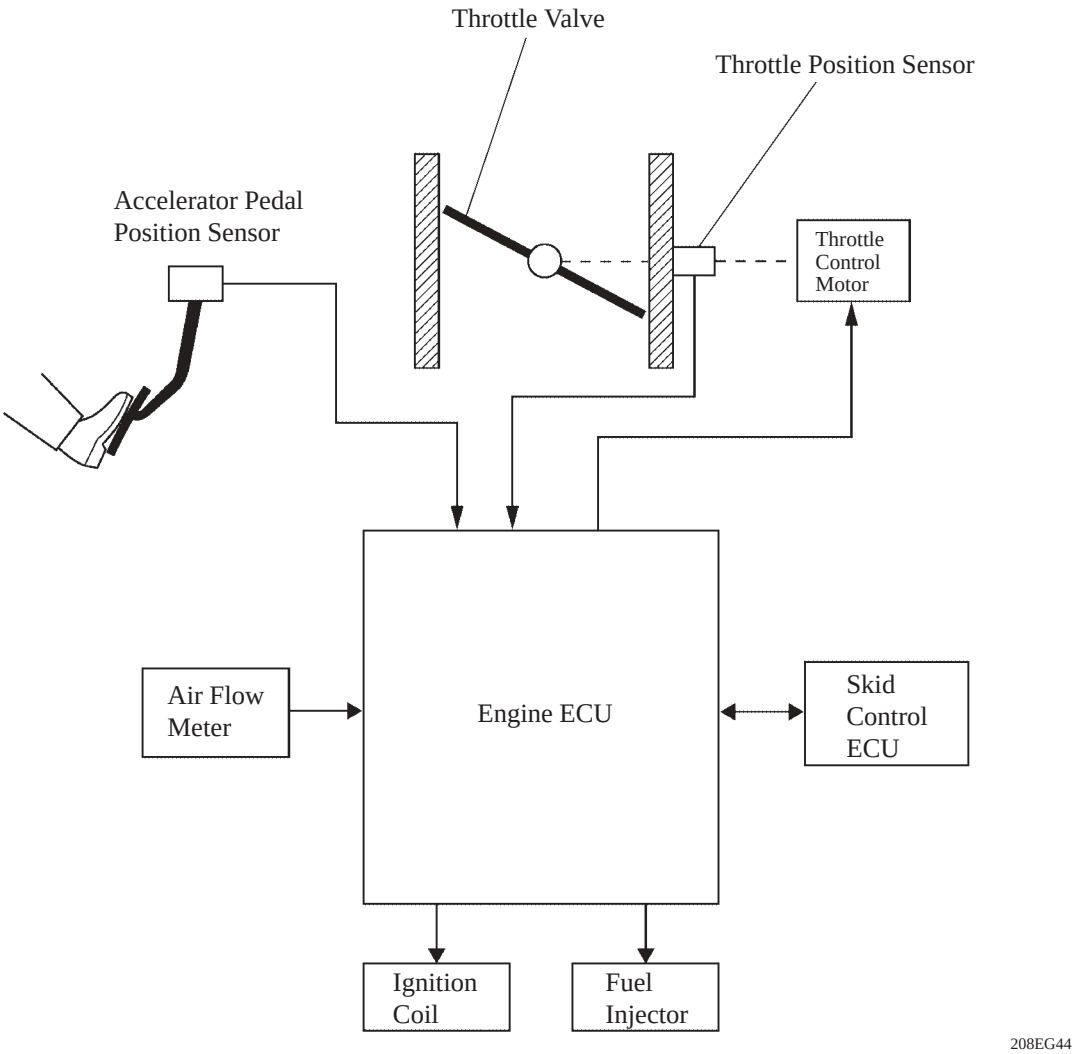

1) Construction

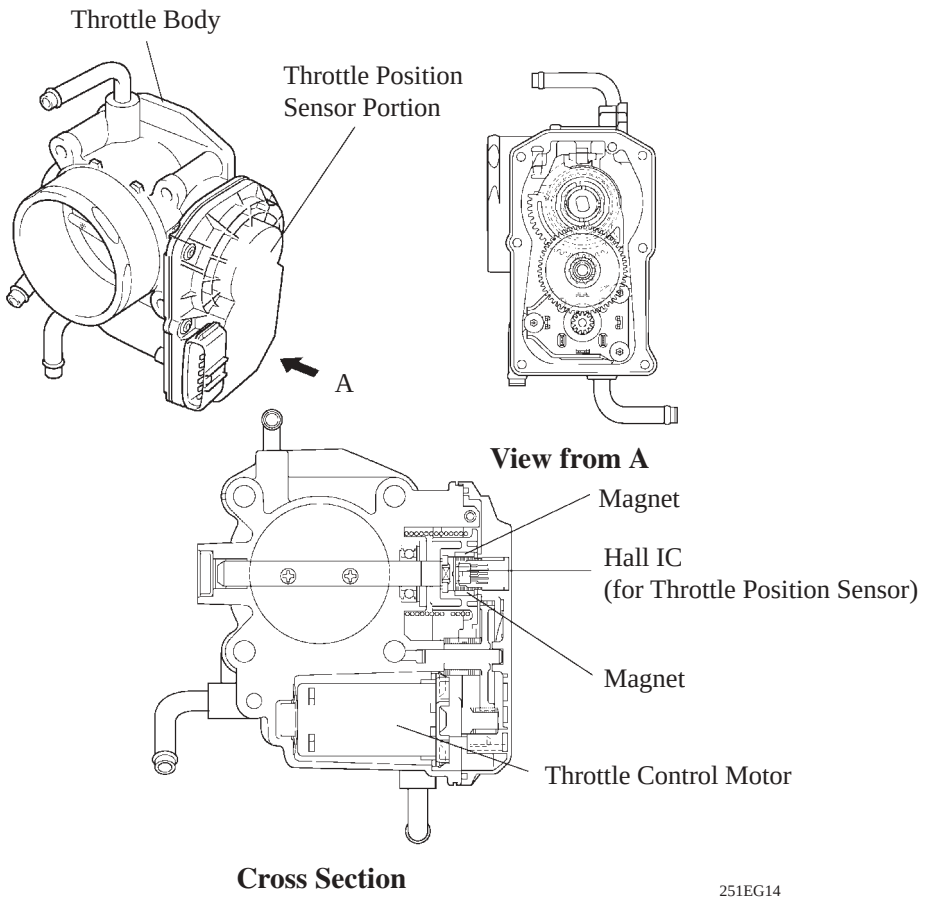

a. Throttle Position Sensor

The throttle position sensor is mounted on the throttle body to detect the opening angle of the throttle valve. For details, refer to Main Components of Engine Control System section on page 173.

b. Throttle Control Motor

A DC motor with excellent response and minimal power consumption is used for the throttle control motor. The engine ECU performs the duty ratio control of the direction and the amperage of the current that flows to the throttle control motor in order to regulate the opening of the throttle valve.

2) Operation

a. General

The engine ECU drives the throttle control motor by determining the target throttle valve opening in accordance with the respective operating condition.

1) Non-Linear Control

2) Idle Speed Control

3) TRC Throttle Control

4) VSC Coordination Control

5) Cruise Control

b. Non-Linear Control

Controls the throttle to an optimal throttle valve opening that is appropriate for the driving condition such as the amount of the accelerator pedal effort and the engine speed in order to realize an excellent throttle control and comfort in all operating ranges.

▶ Control Examples During Acceleration and Deceleration ◀

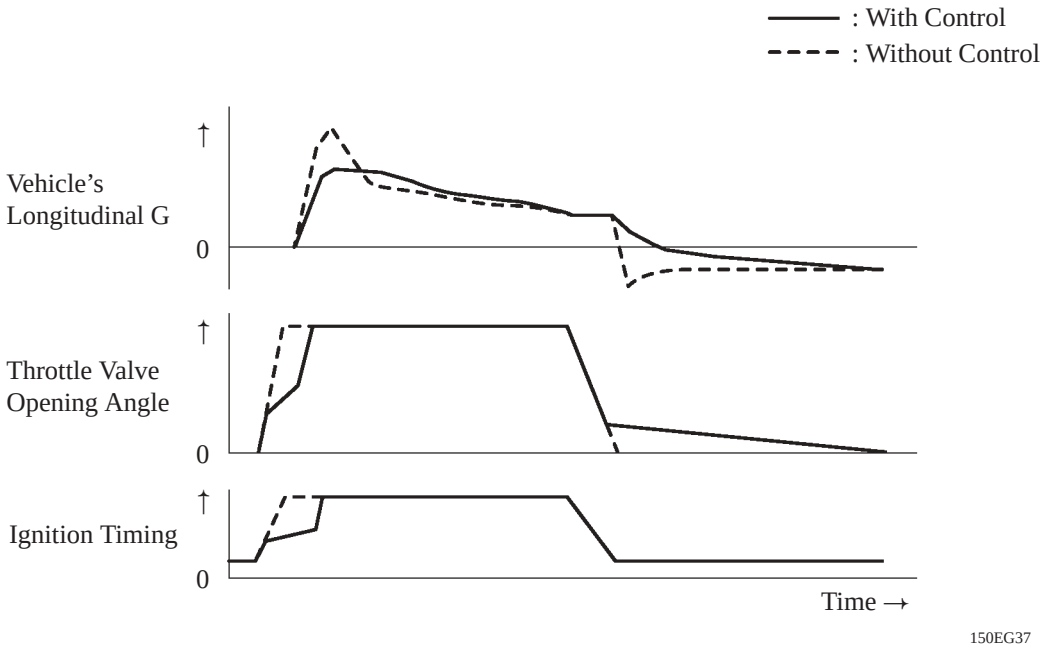

c. Idle Speed Control

The engine ECU controls the throttle valve in order to constantly maintain an ideal idle speed.

d. TRC Throttle Control

As part of the TRC system, the throttle valve is closed by a demand signal from the skid control ECU if an excessive amount of slippage is created at a driving wheel, thus facilitating the vehicle in providing excellent stability and driving force.

e. VSC Coordination Control

In order to bring the effectiveness of the VSC system control into full play, the throttle valve opening angle is controlled by effecting a coordination control with the skid control ECU.

f. Cruise Control

An engine ECU with an integrated cruise control ECU directly actuates the throttle valve for operation of the cruise control.

Fail-Safe of Accelerator Pedal Position Sensor

- The accelerator pedal position sensor comprises two (main, sub) sensor circuits. If a malfunction occurs in either one of the sensor circuits, the engine ECU detects the abnormal signal voltage difference between these two sensor circuits, and switches to the limp mode. In the limp mode, the remaining circuit is used to calculate the accelerator pedal opening, in order to operate the vehicle under limp mode control.

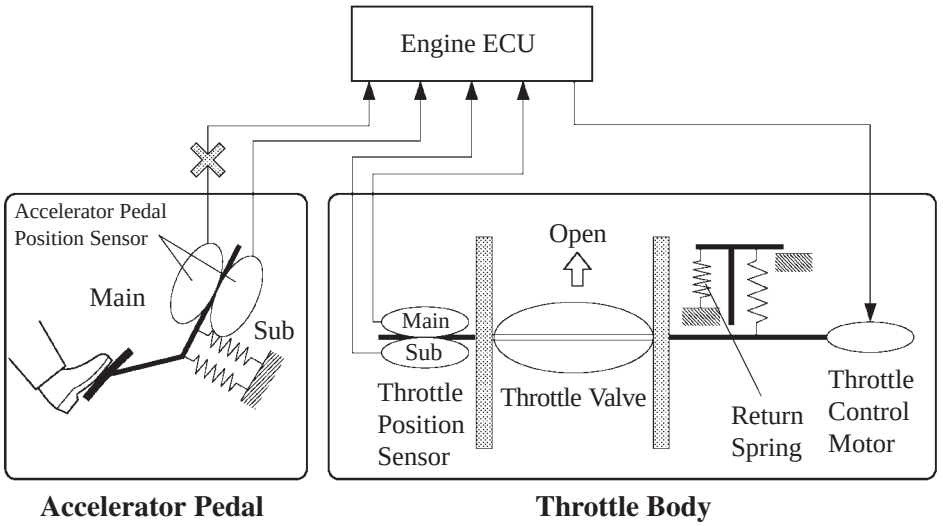

- When both circuits malfunction, the engine ECU detects the abnormal signal voltage from these two sensor circuits, and discontinues the throttle control. At this time, the vehicle can be driven within its idling range.

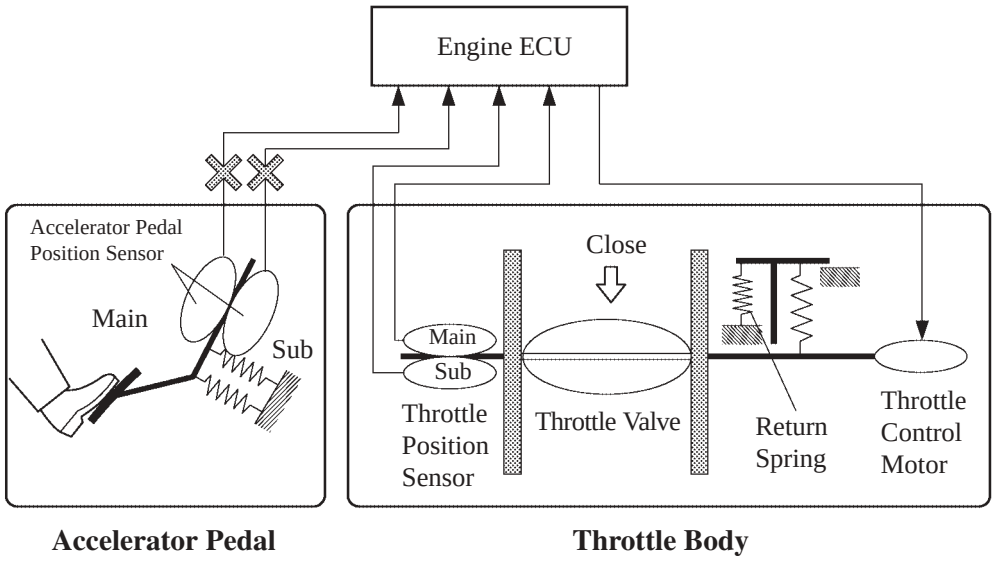

Fail-Safe of Throttle Position Sensor

- The throttle position sensor comprises two (main, sub) sensor circuits. If a malfunction occurs in either one of the sensor circuits, the engine ECU detects the abnormal signal voltage difference between these two sensor circuits, cuts off the current to the throttle control motor, and switches to the limp mode. Then, the force of the return spring causes the throttle valve to return and stay at the prescribed opening. At this time, the vehicle can be driven in the limp mode while the engine output is regulated through the control of the fuel injection and ignition timing in accordance with the accelerator opening.
- The same control as above is effected if the engine ECU detects a malfunction in the throttle control motor system.

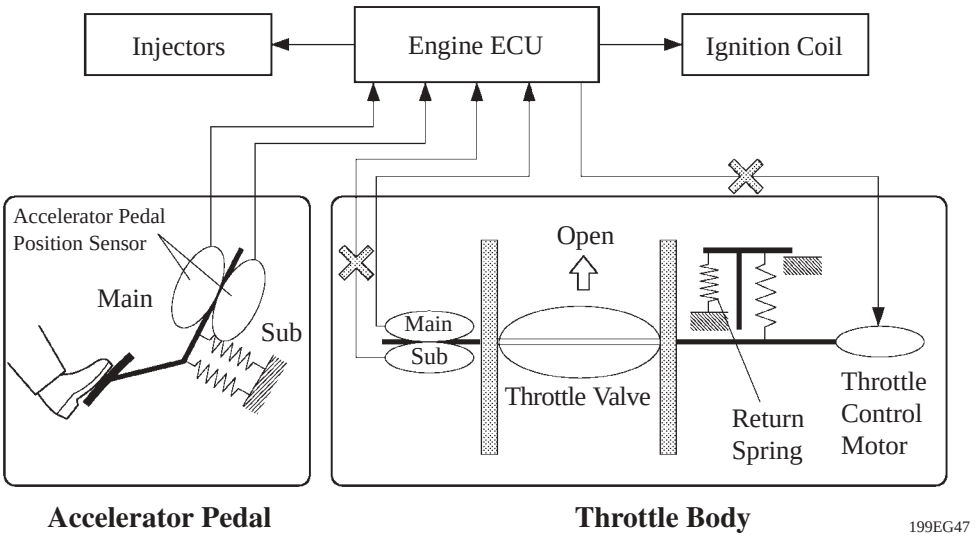

Diagnosis

- When the engine ECU detects a malfunction, the engine ECU makes a diagnosis and memorizes the failed section.
  Furthermore, the engine warning light in the combination meter illuminates or blinks to inform the driver.
- The engine ECU will also store the DTCs (Diagnostic Trouble Codes) of the malfunctions.
- The DTCs can be accessed the use of the hand-held tester.
- All the DTCs have been made to correspond to the SAE controlled codes. Some of the DTCs have been further divided into smaller detection areas than in the past, and new DTCs have been assigned to them. For details, refer to the Avensis Verso Repair Manual (Pub. No. RM1032E).

Service Tip

To clear the DTC that is stored in the engine ECU, use a hand-held tester or disconnect the battery terminal or remove the EFI fuse for 1 minute or longer.

Fail-Safe

When the engine ECU detects a malfunction, the engine ECU stops or controls the engine according to the data already stored in the memory.

▶ Fail-Safe Chart ◀

DTC No.	Fail-Safe Operation	Fail-Safe Deactivation Conditions
P0031, P0032, P0037, P0038,	The heater circuit in which the abnormality is detected is turned off.	Ignition switch OFF.
P0100, P0102, P0103	Ignition timing is calculated from engine speed and a throttle angle.	Return to normal condition.
P0110, P0112, P0113	Intake air temp. is fixed at 20°C (68°F).	Return to normal condition.
P0115, P0117, P0118	Water temp. is fixed at 80°C (176°F).	Return to normal condition.
P0120, P0122, P0123, P0220, P0222, P0223, P2135	Fuel cut intermittently when idle.	Return to normal condition and ignition switch OFF.
P0325, P0327, P0328	Max. timing retardation.	Ignition switch OFF.
P0351, P0352, P0353, P0354	Fuel cut.	Return to normal condition.
P0604, P0606, P0607, P0657	Fuel cut intermittently when idle.	Return to normal condition and ignition switch OFF.
P2102, P2103	Fuel cut intermittently when idle.	Return to normal condition and ignition switch OFF.
P2111, P2112	Fuel cut intermittently when idle.	Return to normal condition and ignition switch OFF.
P2118, P2119	Fuel cut intermittently when idle.	Return to normal condition and ignition switch OFF.

■2AZ-FE ENGINE

1. General

- The 1AZ-FE engine has been discontinued and the 2AZ-FE engine has been introduced on the model for Australia.
- The 2AZ-FE engine is an in-line, 4-cylinder, 2.4-liter, and 16-valve DOHC engine in which the bore and stroke have been increased from the 1AZ-FE engine.
- This engine has following features that have been adapted in order to realize the further improvement of the engine performance, fuel economy, and to reducing exhaust emissions.
  - – Meets the STEP II regulation requirements.
  - – ETCS-i (Electronic Throttle Control System-intelligent) has been adopted.

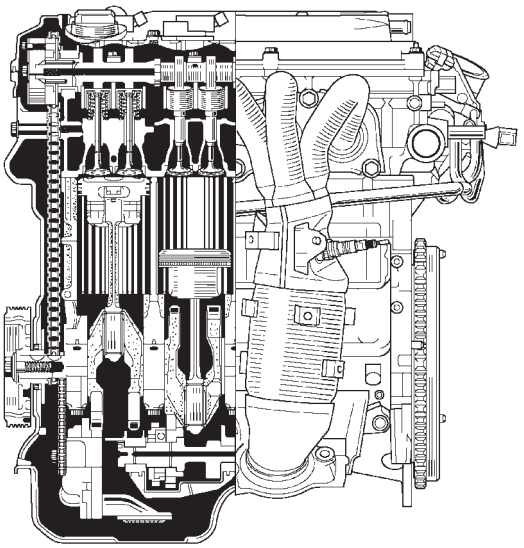

258AS63

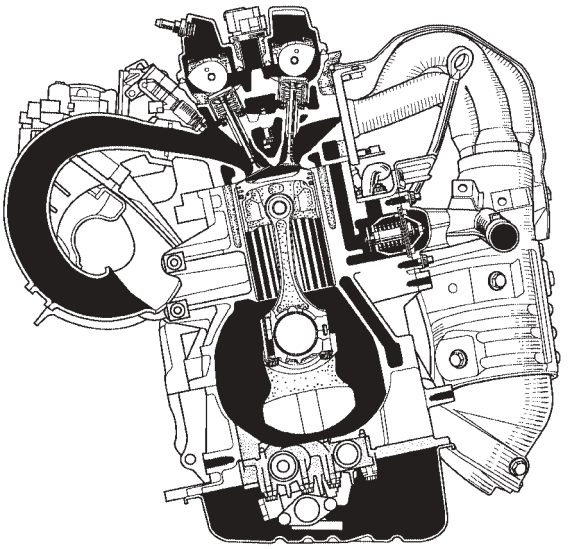

258AS64

▶ Engine Specifications ◀

Engine Type		2AZ-FE	1AZ-FE
No. of Cyls. & Arrangement		4-Cylinder, In-line	←
Valve Mechanism		16-Valve DOHC, Chain Drive (with VVT-i)	←
Combustion Chamber		Pentroof Type	←
Manifolds		Cross-Flow	←
Fuel System		EFI	←
Displacement	cm^3 (cu. in.)	2362 (144.2)	1998 (121.9)
Bore x Stroke	mm (in.)	88.5 x 96.0 (3.48 x 3.78)	86.0 x 86.0 (3.39 x 3.39)
Compression Ratio		9.6 : 1	9.8 : 1
Max. Output	(EEC)	115 kW @ 5700 rpm	110 kW@ 6000 rpm
Max. Torque	(EEC)	221 N·m @ 4000 rpm	192 N·m @ 4000 rpm
Oil Grade		API SJ, SL, EC or ILSAC	API SJ, EC or ILSAC

▶ Valve Timing ◀

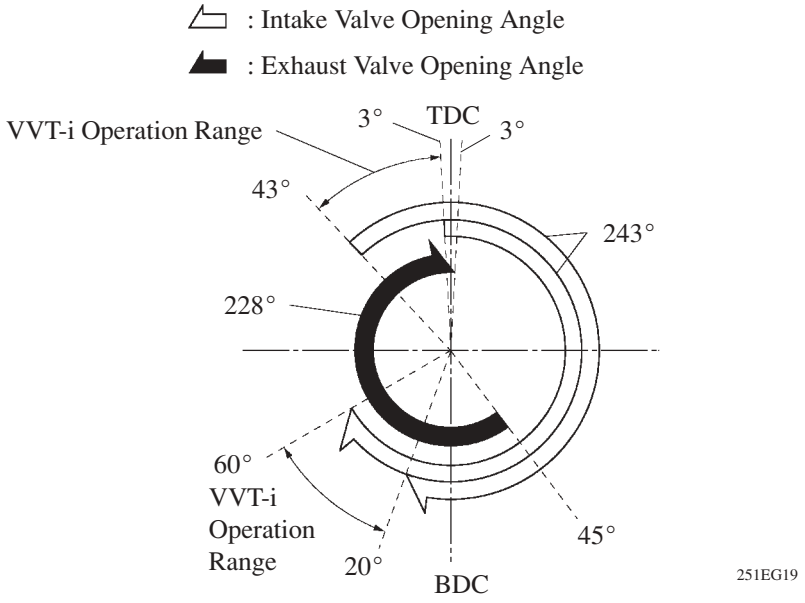

2. Feature of 2AZ-FE Engine

The 2AZ-FE engine has been able to achieve the following performance through the adoption of the item listed below.

(1) High performance and fuel economy

(2) Low noise and vibration

(3) Lightweight and compact design

(4) Good serviceability

(5) Clean emission

Item	(1)	(2)	(3)	(4)	(5)
The VVT-i system is used.	○				○
The ETCS-i has been adopted.	○				
A cylinder block made of aluminum alloy along with a magnesium head cover has been adopted.			○		
The taper squish shape has been adopted for the piston head.	○				○
The DIS (Direct Ignition System) makes ignition timing adjustment unnecessary.	○			○	○
A serpentine belt drive system has been adopted, and the brackets and the engine have been integrated.			○	○	
Timing chain has been used.			○	○	
The fuel returnless system has been adopted.			○	○	○
Quick connectors are used to connect the fuel hose with the fuel pipes.				○	
12-hole type fuel injectors with high atomizing performance have been adopted.	○				○
Iridium-tipped spark plugs have been adopted.	○			○	
Intake manifold made of plastic has been adopted.			○		
The ceramic type TWC (Three-Way Catalytic Converter) has been adopted.					○
A resin gear balance shaft has been adopted.		○	○		

3. Major Difference

The major difference between the 2AZ-FE engine on the new Avensis Verso and the 1AZ-FE engine on the previous Avensis Verso are the following:

System		Features
Engine Proper	Cylinder Block	● The cylinder bore has been changed.
	Piston	● The piston diameter has been increased.
	Crankshaft	● The balance shaft drive gear has been installed onto the crankshaft. ● A balance shaft has been adopted.
Valve Mechanism		● The cam profile has been changed in conjunction with the change in the valve timing.
Cooling System		● The TOYOTA genuine Super Long Life Coolant (SLLC) has been adopted.
Intake and Exhaust system		● An electronic throttle body with a built-in no-contact type throttle position sensor and a throttle control motor has been adopted. ● The exhaust system has been revised to optimize exhaust performance. In addition, the 2 TWCs located directly below the exhaust manifold have been integrated into 1 TWC, and a TWC has been added under the floor. ● The ceramic type TWC has been adopted directly below the exhaust manifold and under floor.
Fuel System		● The 12-hole type injector has been adopted.
Charging System		● The segment conductor type alternator has been adopted.
Engine Control System		● The ETCS-i (Electronic Throttle Control system-intelligent) has been adopted. ● A flat type knock sensor has been adopted. ● The air fuel ratio sensor has been discontinued and two oxygen sensor has been adopted. ● A contact type accelerator pedal position sensor has been adopted. ● A no-contact type throttle position sensor has been adopted. ● The charging control has been adopted.
Diagnosis		● Along with the adoption of the ETCS-i, the DTCs (Diagnostic Trouble Codes) have been added.

4. Engine Proper

Cylinder Head Cover

- A lightweight magnesium alloy diecast cylinder head cover is used.
- The cylinder head cover gasket and the spark plug gasket have been integrated to reduce the number of parts.

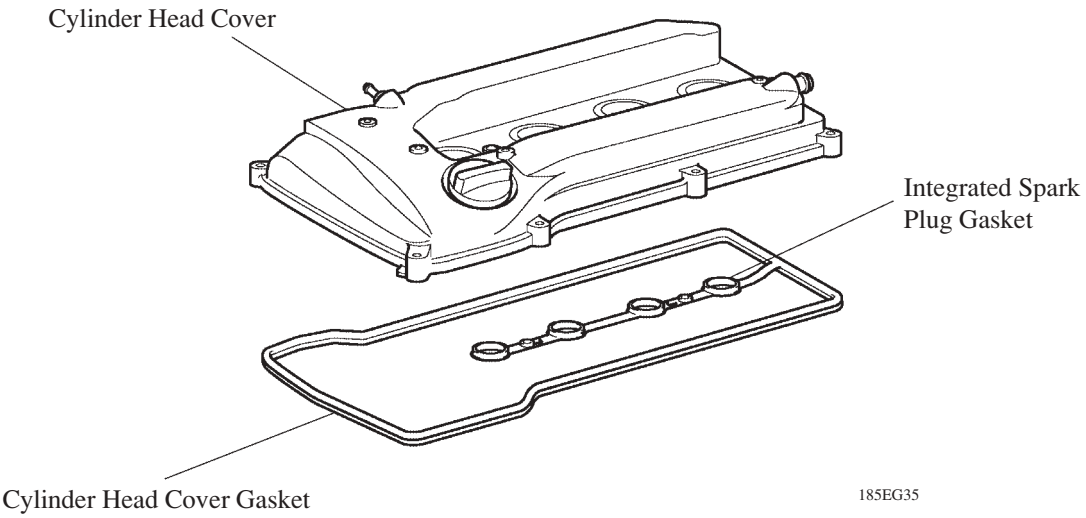

Cylinder Head Gasket

- A steel-laminate type cylinder head gasket has been adopted.

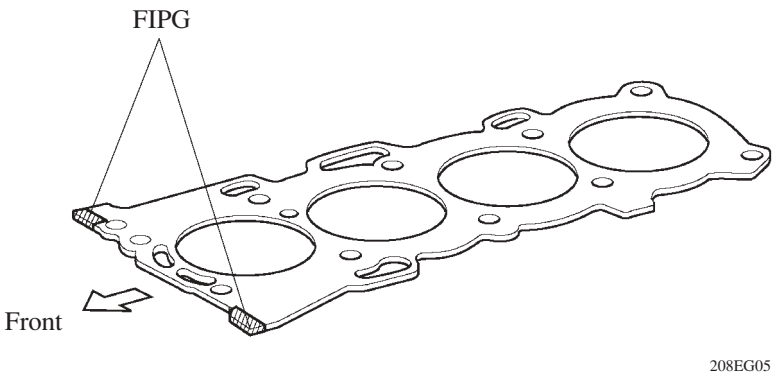

Cylinder Head

- The taper squish combustion chamber has been used to realize the highly engine's knocking resistance and fuel efficiency.
- An upright intake port has been used to realize the highly intake efficiency.
- Installing the injectors in the cylinder head enables the injectors inject fuel as close as possible to the combustion chamber. This prevents the fuel from adhering to the intake port walls, which reduces HC exhaust emissions.
- The routing of the water bypass jacket in the cylinder head has been optimized to realize the highly cooling performance. In addition, a water bypass passage has been provided bellow the exhaust ports to reduce the number of parts and to achieve weight reduction.

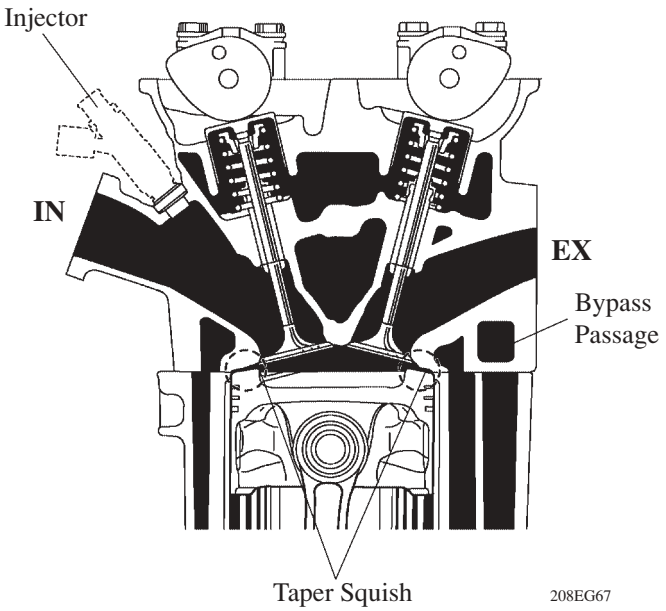

A – A Cross Section

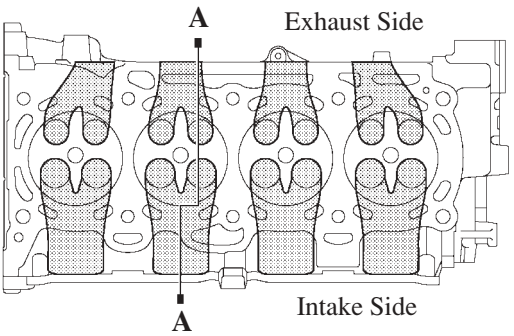

View from the Back Side

Cylinder Block

- Lightweight aluminum alloy is used for the cylinder block.
- By producing the thin cast-iron liners and aluminum alloy cylinder block as a unit to realize the compact design. The liner is thin, so that boring is not possible.
- Passage holes are provided in the bulkhead of the cylinder block. As a result, the air at the bottom of the cylinder flows smoother, and pumping loss (back pressure at the bottom of the piston generated by the piston's reciprocal movement) is reduced.
- The oil filter and the air conditioner compressor bracket are integrated the crankcase, also the water pump swirl camber, the thermostat housing and the rear oil seal retainer integrated the cylinder block.

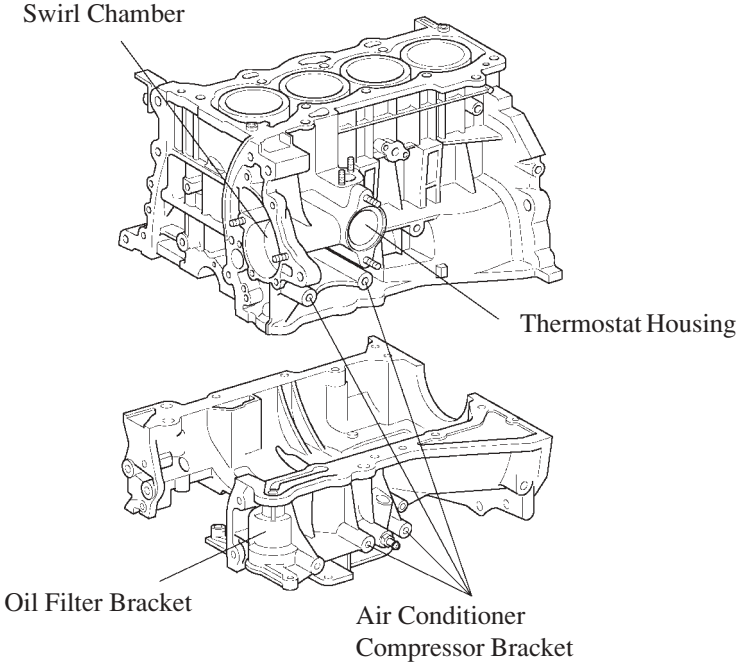

185EG42

▶ Air Flow During Engine Revolution ◀

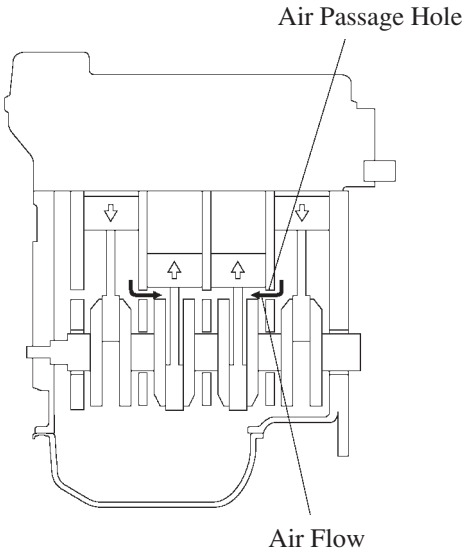

179EG04

Piston

- The piston is made of aluminum alloy and skirt area is made compact and lightweight.
- The piston head portion has adopted a taper squish shape.
- The piston skirt has been coated with resin.
- Full floating type piston pins are used.
- By increasing the machining precision of the cylinder bore diameter, the outer diameter of the piston has been made into one type.

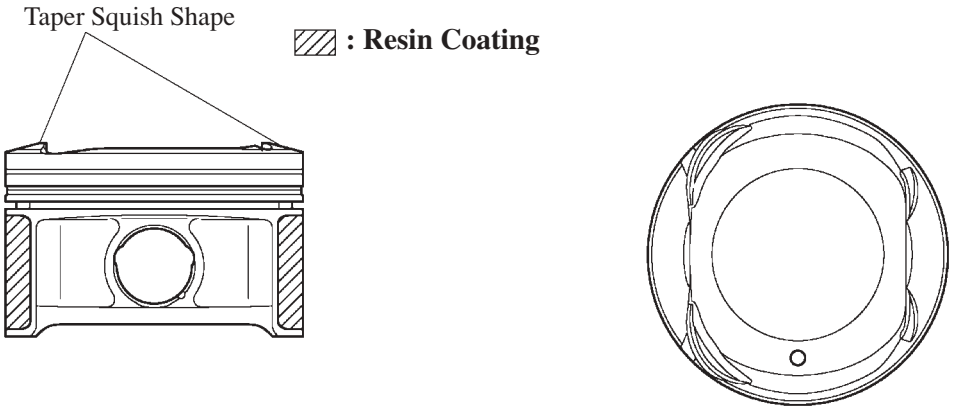

208EG06

Connecting Rod

- The connecting rods and caps are made of high strength steel for weight reduction.
- Nutless-type plastic region tightening bolts of the connecting rod are adopted for a lighter design.

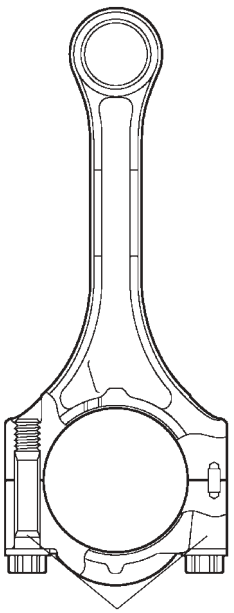

Plastic Region Tightening Bolts 208EG61

Crankshaft

- The crankshaft has 5 journals and 8 balance weights.
- The precision and surface roughnesses of the pins and journal have been realized to reduce frictional less.
- The balance shaft drive gear has been installed onto the crankshaft.
- The crankshaft is made of forged steel.

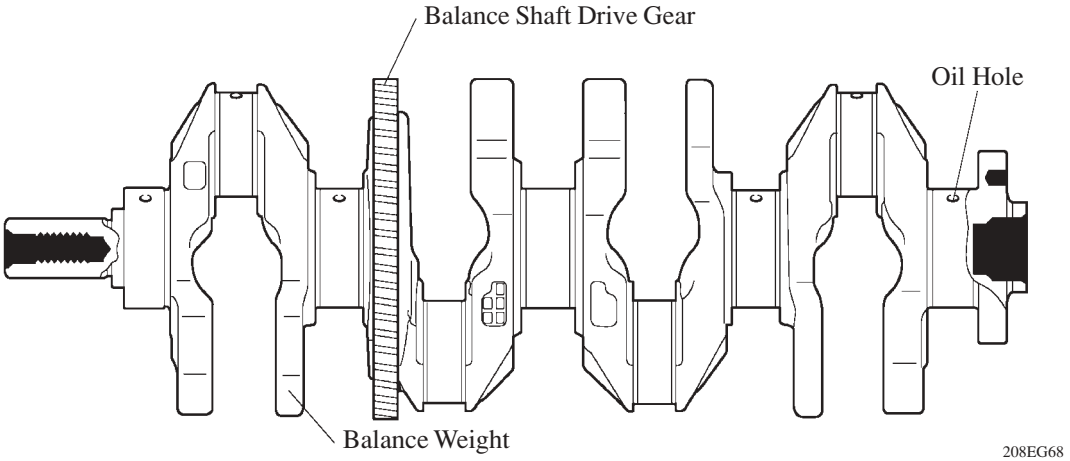

Balance Shaft

- A balance shaft has been adopted to reduce vibrations.
- A direct-drive system has been adopted which makes use of gear that is installed onto the counterweight of crankshaft.
- In addition, a resin gear has been adopted on the driven side to suppress noise and offer lightweight design.

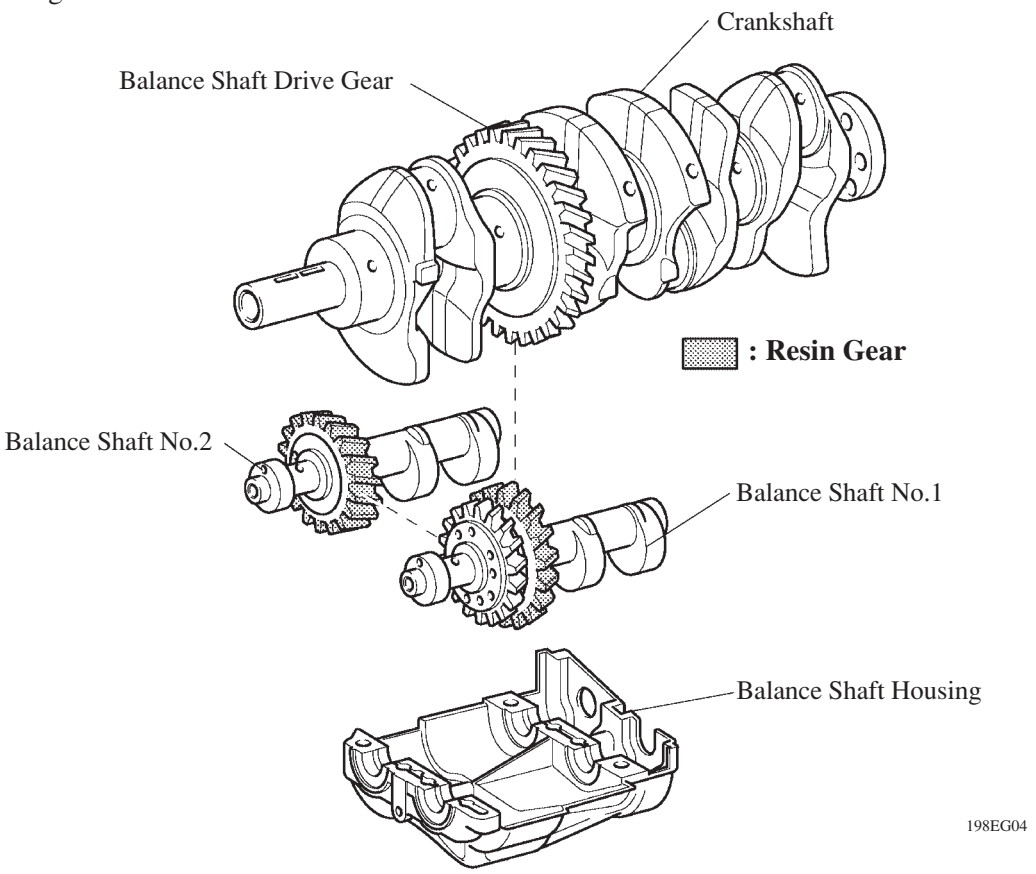

5. Valve Mechanism

General

- Each cylinder is equipped with 2 intake valves and 2 exhaust valves. Intake and exhaust efficiency has been increased due to the larger total port areas.
- The valves are directly opened and closed by 2 camshafts.
- The intake and exhaust camshafts are driven by the chain. The VVT-i system used for the intake camshaft is used to realize highly fuel economy, engine performance and reduce exhaust emissions. For details, see page 212 in the VVT-i system section.
- The shimless type valve lifter is used.

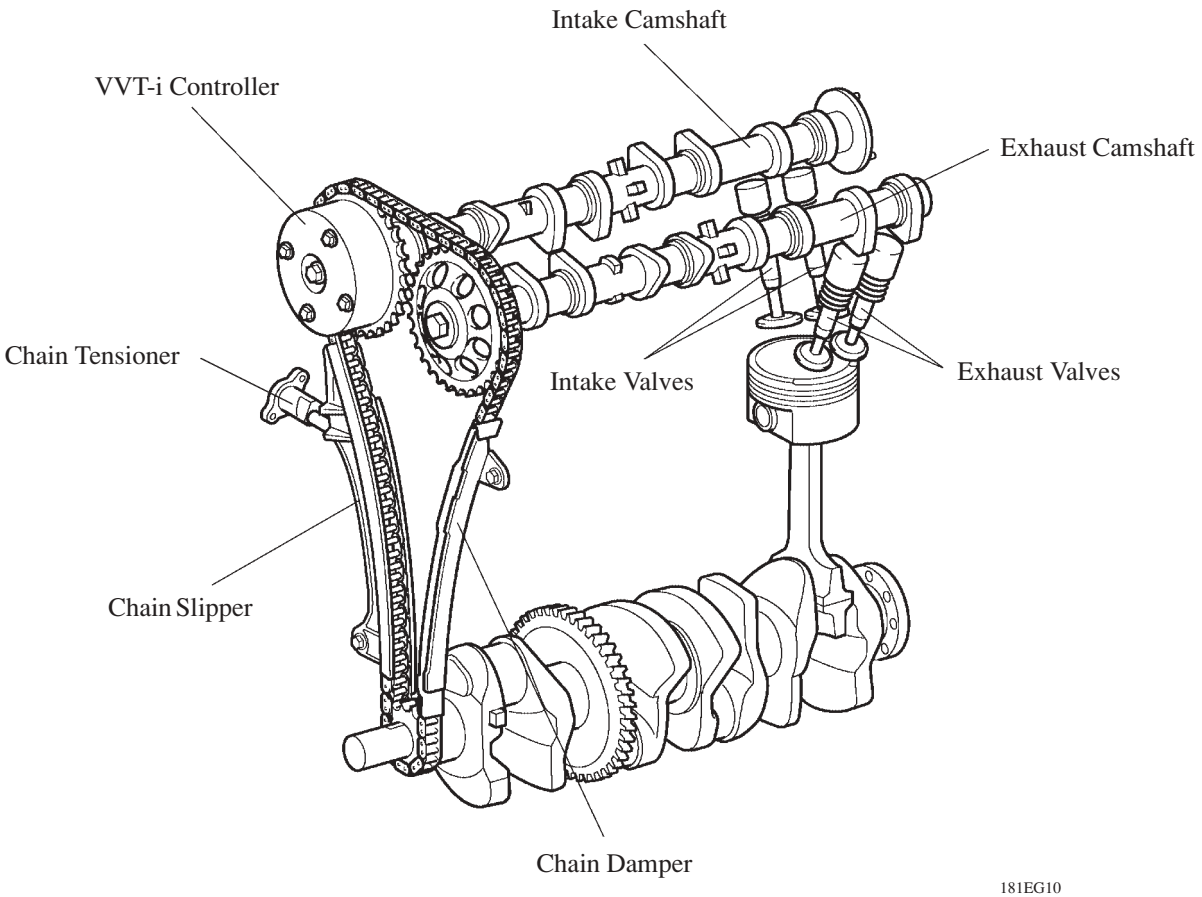

Camshaft

- The intake camshaft is provided with timing rotor to trigger the camshaft position sensor.
- In conjunction with the adoption of the VVT-i system, an oil passage is provided in the intake camshaft in order to supply engine oil pressure to the VVT-i system.
- A VVT-i controller has been installed on the front of the intake camshaft to vary the timing of the intake valves.

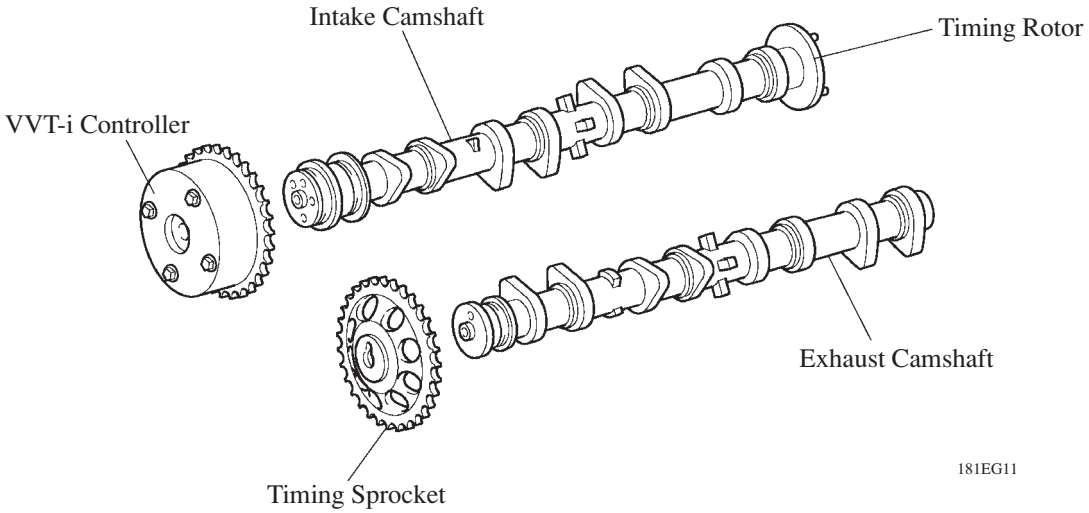

Intake and Exhaust Valves

- Intake and exhaust valves with large-diameter valve face have been adopted to improve the intake air and exhaust gas flow.
- Narrow valves stems have been adopted to reduce the intake and exhaust resistance and for weight reduction.

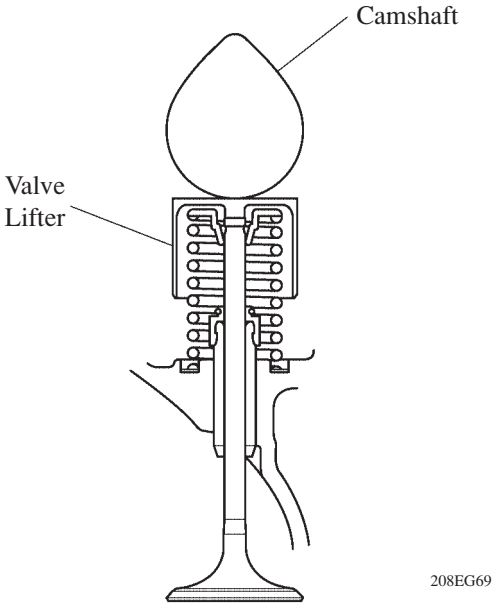

- Along with the increased amount of valve lift, shimless valve lifters that provided a large cam contact surface have been adopted. The adjustment of the valve clearance is accomplished by selecting and replacing the appropriate valve lifters.

Service Tip

The valve lifters are available in 35 size increment of 0.020 mm (0.008 in.), from 5.60 mm (0.199 in.) to 5.740 mm (0.266 in.).

Timing Chain

- A roller chain with 8 mm pitch has been adopted.
- The timing chain is lubricated by oil jet.

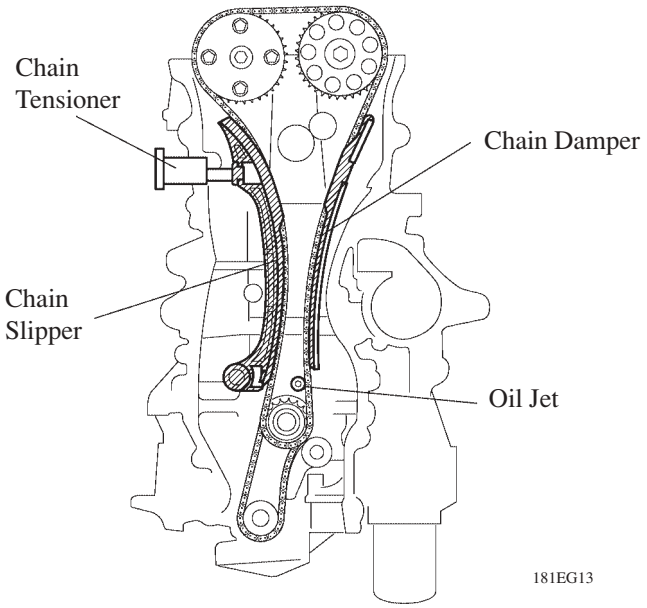

Chain Tensioner

- The chain tensioner uses a spring and oil pressure to maintain proper chain tension at all time. The chain tensioner suppresses noise generated by the chain. A ratchet type non-return mechanism is also used.
- To improve serviceability, the chain tensioner is constructed so that it can be removed and installed from the outside of the timing chain cover.

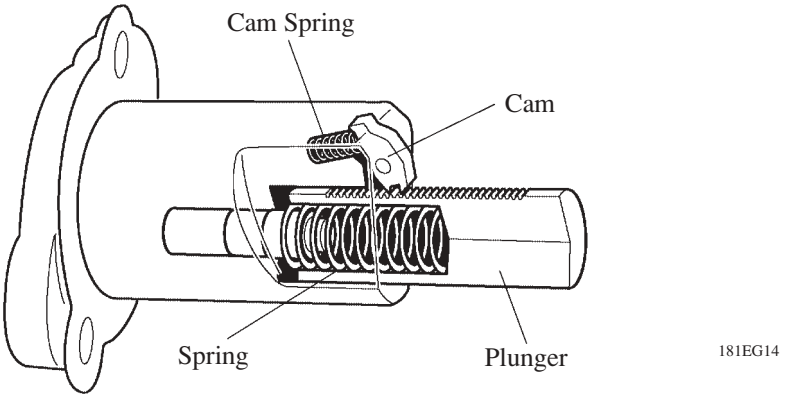

6. Lubrication System

General

- The lubrication circuit is fully pressurized and oil passes through an oil filter.
- The trochoidal type oil pump is chain-driven by the crankshaft.
- The oil filter is attached downward from the crankcase to improve serviceability.
- Along with the adoption of the VVT-i system, the cylinder head is provided with a VVT-i controller and a camshaft timing oil control valve. This system is operated by the engine oil.

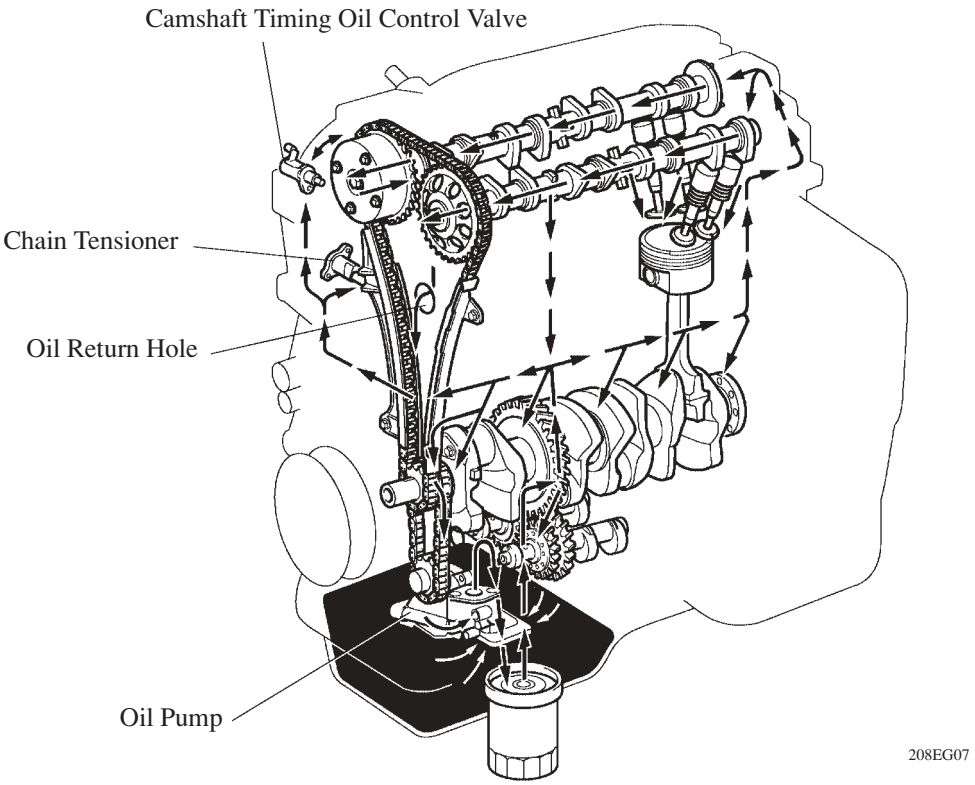

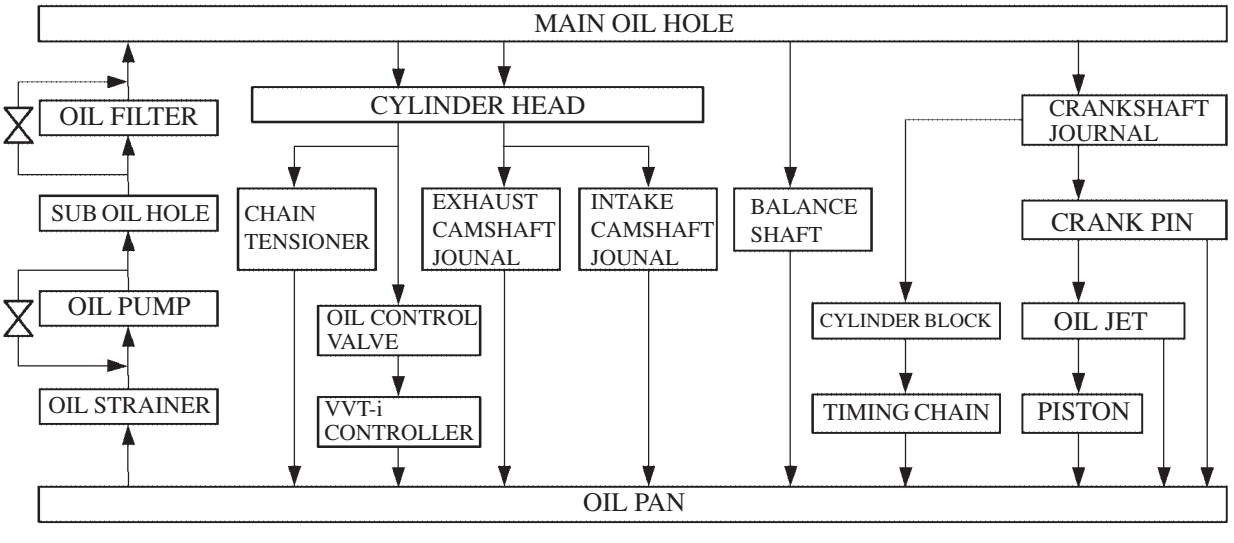

▶ Specifications ◀

Oil Capacity	Dry	4.5 liters (4.8 US qts, 4.0 Imp. qts)
	with Oil Filter	3.8 liters (4.0 US qts, 3.3 Imp. qts)
	without Oil Filter	3.6 liters (3.8 US qts, 3.2 Imp. qts)

Oil Pump

- The trochoidal type oil pump is chain driven by the crankshaft, and fits compactly inside the timing chain cover.
- Friction has been reduced by means of 2 relief holes in the internal relief system.

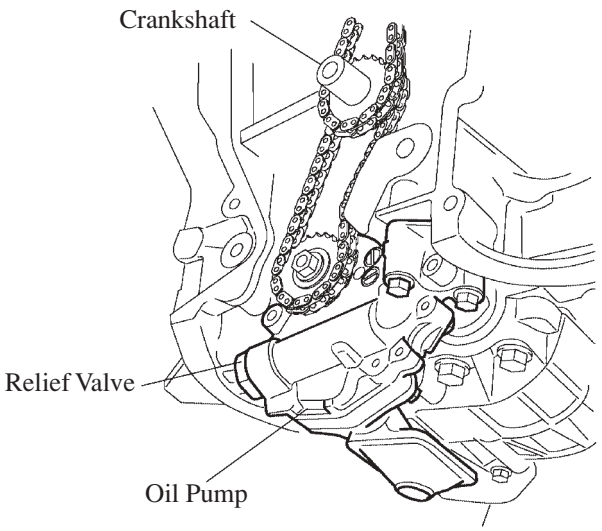

181EG43

7. Cooling System

- The cooling system is a pressurized, forced-circulation type.
- A thermostat with a bypass valve is located on the water inlet housing to maintain suitable temperature distribution in the cooling system. This prevents sudden jumps in temperature while the engine is warming up.
- The flow of the engine coolant makes a U-turn in the cylinder block to ensure a smooth flow of the engine coolant. In addition, a bypass passage is enclosed in the cylinder head and the cylinder block.
- Warm water from the engine is sent to the throttle body to prevent freeze-up.

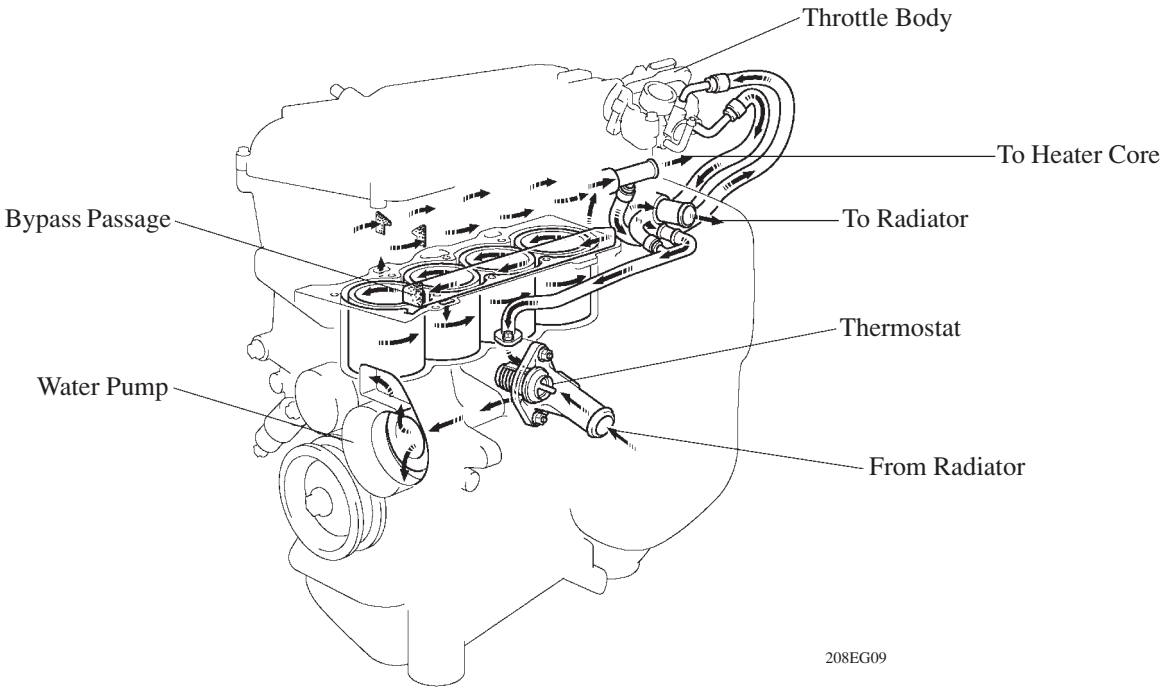

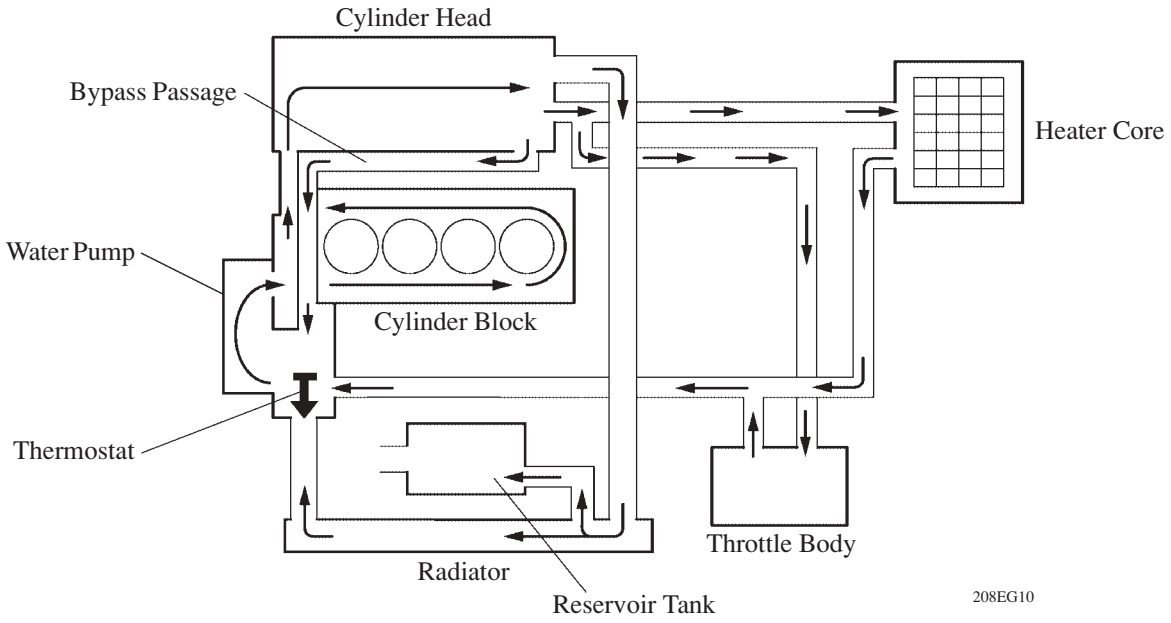

▶ **Specifications** ◀

Engine Coolant	Capacity liters (US qts, Imp. qts)	6.2 (6.6, 5.5)
	Type	The TOYOTA Super Long Life Coolant (SLLC) or Equivalent
Thermostat	Opening Temperature °C (°F)	80 – 84 (176 – 183)

Super Long Life Coolant

The TOYOTA genuine Super Long Life Coolant (SLLC) has been adopted. As a result, the maintenance interval has been extended. For details, see page 157.

8. Intake and Exhaust System

The adoption of ETCS-i (Electronic Throttle Control System-intelligent) has realized excellent throttle control.

- The intake manifold has been made of plastic to reduce the weight and the amount of heat transferred from the cylinder head.

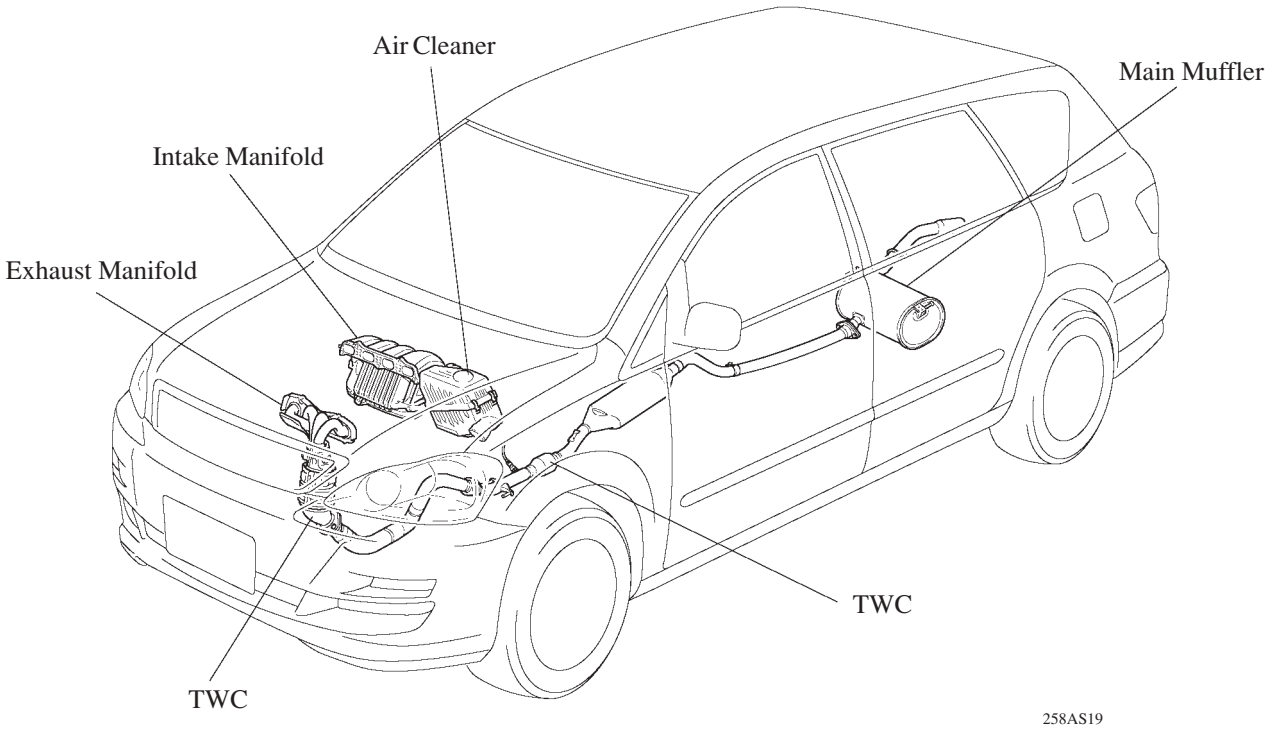

Air Cleaner

A flameless, full-fabric air filter has been adopted to reduce weight and to simplify its disposal.

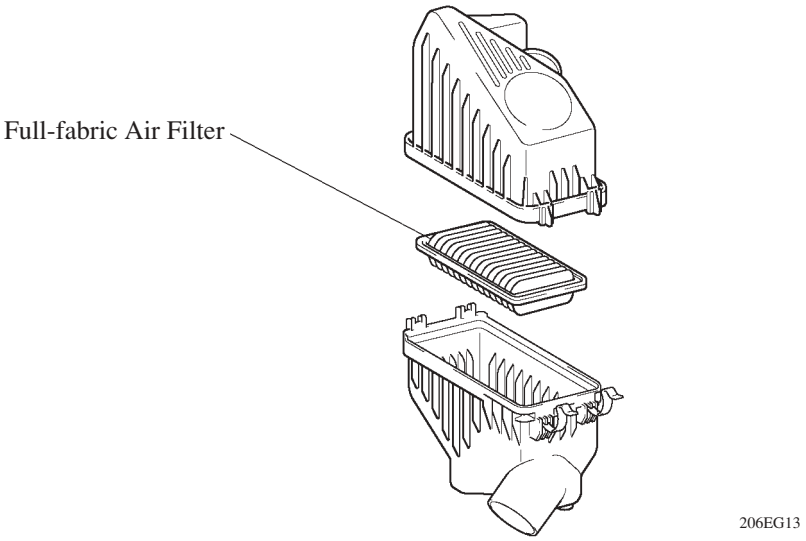

Throttle Body

- An electronic throttle body with a built-in throttle position sensor and throttle control motor has been adopted.
- The adoption of the link-less type ETCS-i has realized excellent throttle control. For details of ETCS-i control, refer to see page 174.
- A DC motor with excellent response and minimal power consumption is used for the throttle control motor. The ECU performs the duty ratio control of the direction and the amperage of the current that flows to the throttle motor in order to regulate the opening angle of the throttle valve.
- The control of the throttle position sensor is the same as that on the 1AZ-FE engine. For details, see page 173.

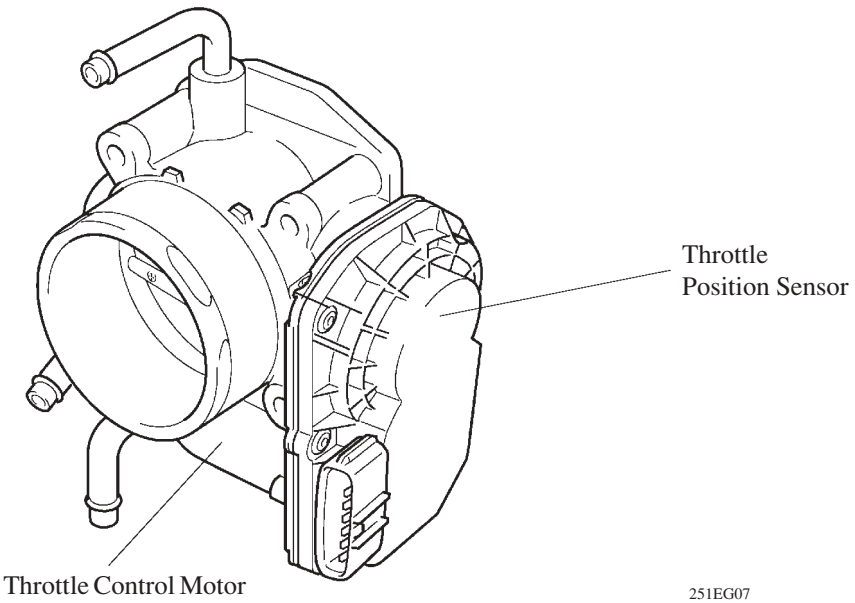

Intake Manifold

- The intake manifold has been made of plastic to reduce the weight and the amount of heat transferred from the cylinder head. As a result, it has become possible to reduce the intake air temperature and improve the intake volumetric efficiency.
- A resonator is installed inside the air intake chamber which makes use of the intake pulse to improve torque in the mid-speed range.

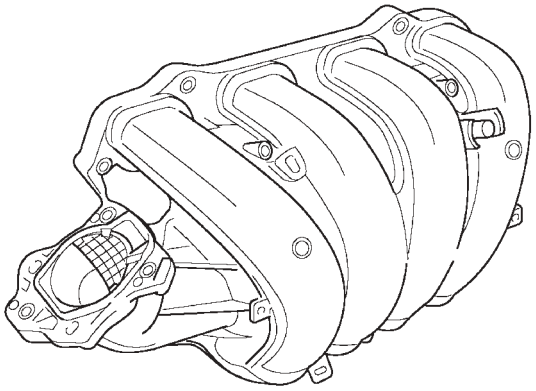

258AS50

Exhaust Manifold

- A stainless steel exhaust manifold is used for weight reduction.
- A single exhaust pipe has been adopted for the start-up converter case in order to improve the warm-up performance of the catalyst and reduce exhaust gas emissions during the starting of the engine.

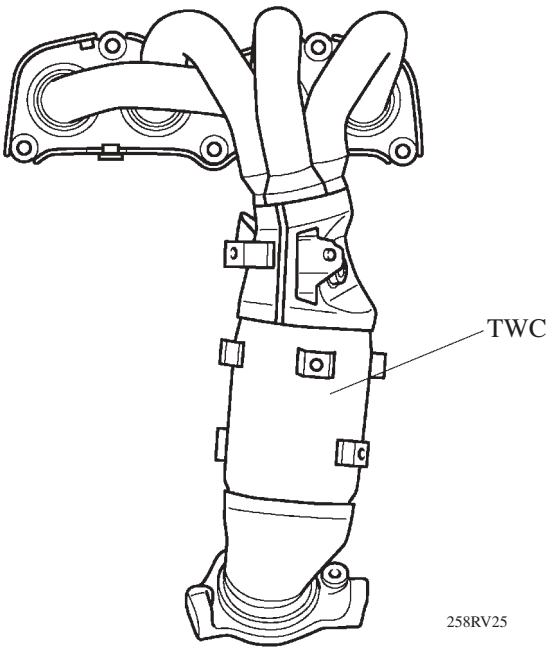

258RV25

Three-Way Catalytic Converter

- The ceramic type TWC (Three-Way Catalytic Converter) has been adopted directly below the exhaust manifold and under floor. This TWC enables to improve exhaust emissions by optimizing the cell's density and the wall thickness.

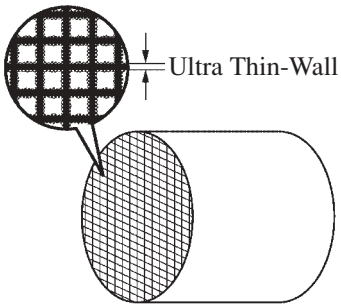

198EG06

Exhaust Pipe

- An under floor catalyst has been adopted and the pipe upstream of the catalyst has been changed to a dual pipe construction.

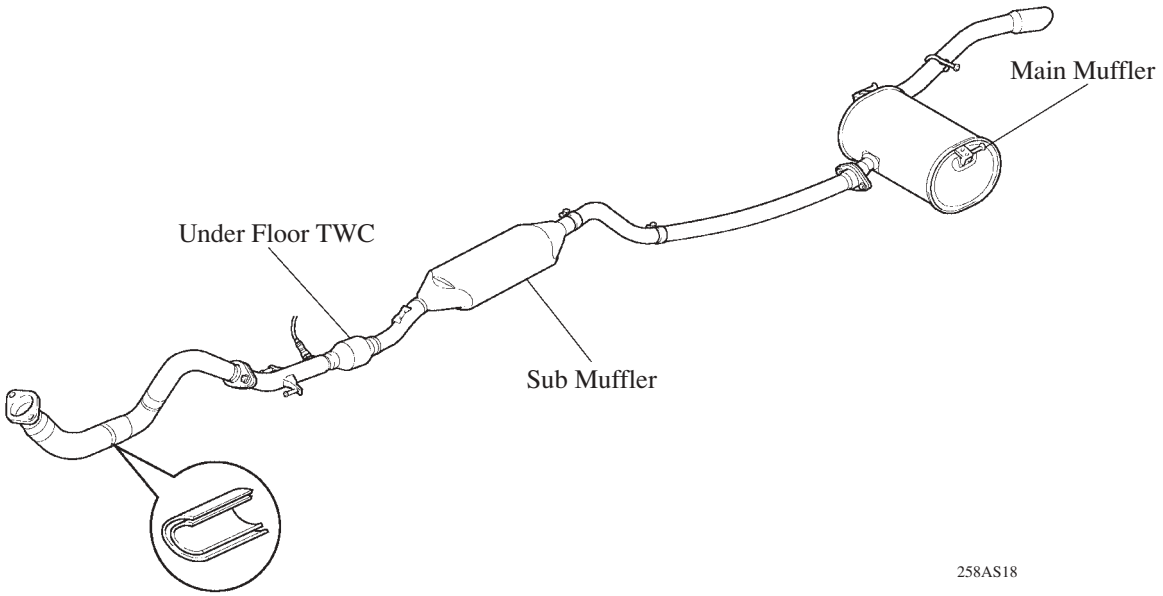

258AS18

9. Fuel System

- A fuel returnless system has been used to reduce evaporative emissions.
- A compact fuel pump in which a fuel filter and pressure regulator are integrated in the module fuel pump assembly has been adopted.
- A quick connector has been adopted to connect the fuel pipe with the fuel hose to improve serviceability.
- The aluminum diecast delivery pipe has been integrated with the pulsation damper.
- Newly designed 12-hole ultra-fine atomization injectors have been adopted.

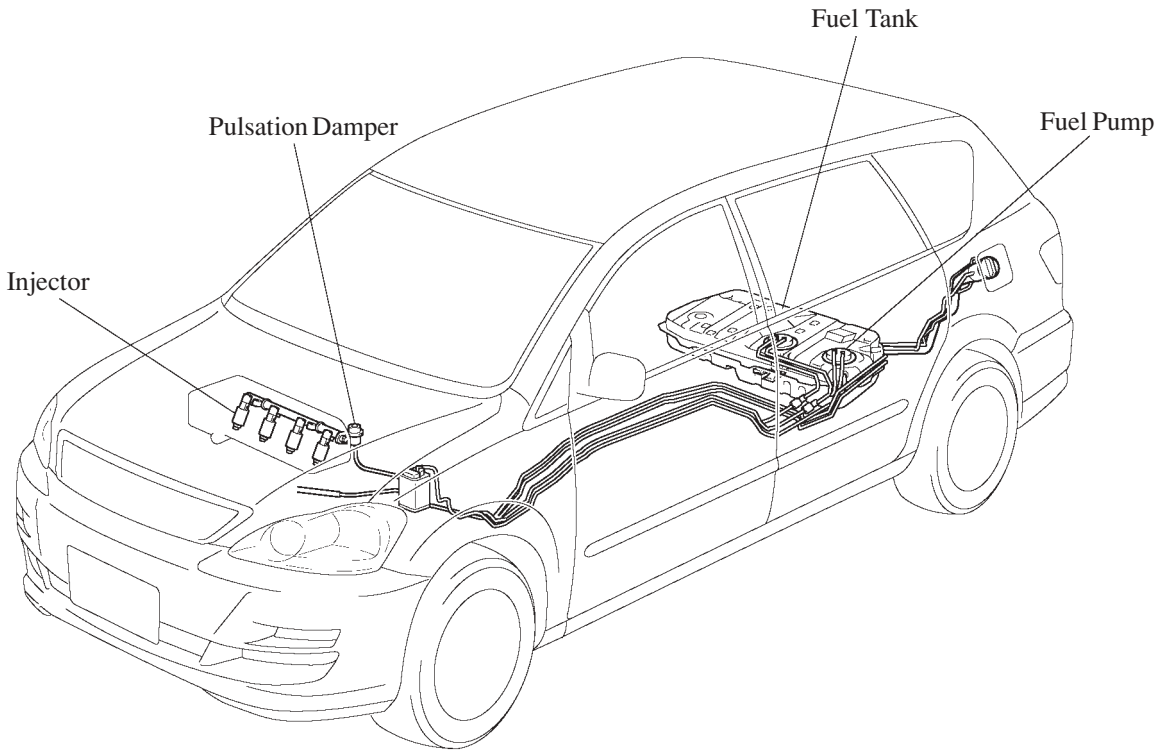

Fuel Returnless System

- This system has been adopted to reduce the evaporative emission. As shown below, integrating the fuel filter, pressure regulator, and fuel sender gauge with fuel pump assembly it possible to discontinue the return of fuel from the engine area and prevent temperature rise inside the fuel tank.

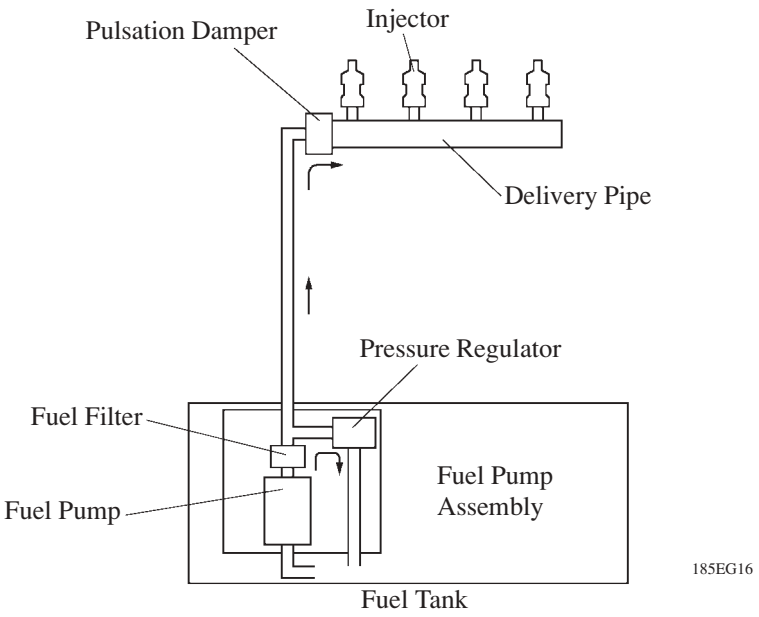

Fuel Injector

The same fuel injectors as the 1AZ-FE engine have been adopted. For details, see page 160.

Fuel Pump

A compact fuel filter, pressure regulator, and fuel sender gauge are integrated in the fuel pump assembly has been adopted.

▶ Specifications of Pressure Regulation ◀

Adjusting Pressure	kPa (kgf/cm^2)	324 ± 3.0 (3.3 ± 0.03)

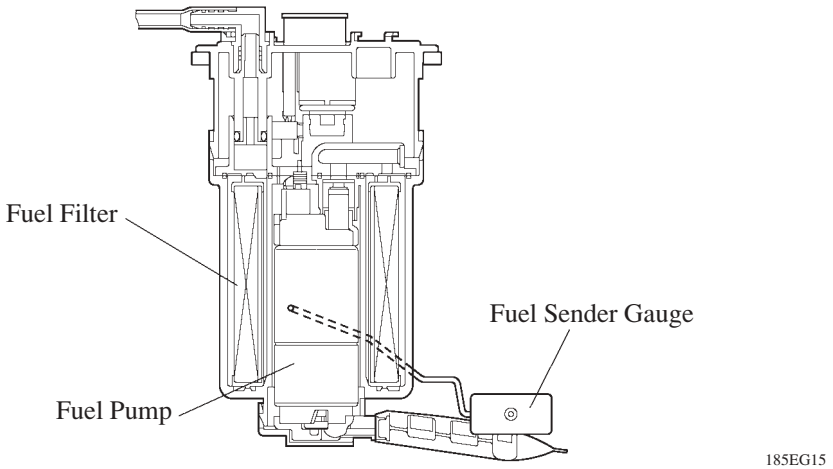

10. Ignition System

General

- A DIS (Direct Ignition System) has been adopted. The DIS improves the ignition timing accuracy, reduces high-voltage loss, and enhances the overall reliability of the ignition system by eliminating the distributor.
  The DIS in this engine is an independent ignition system which has one ignition coil (with igniter) for each cylinder.
- Iridium-tipped spark plugs have been adopted.

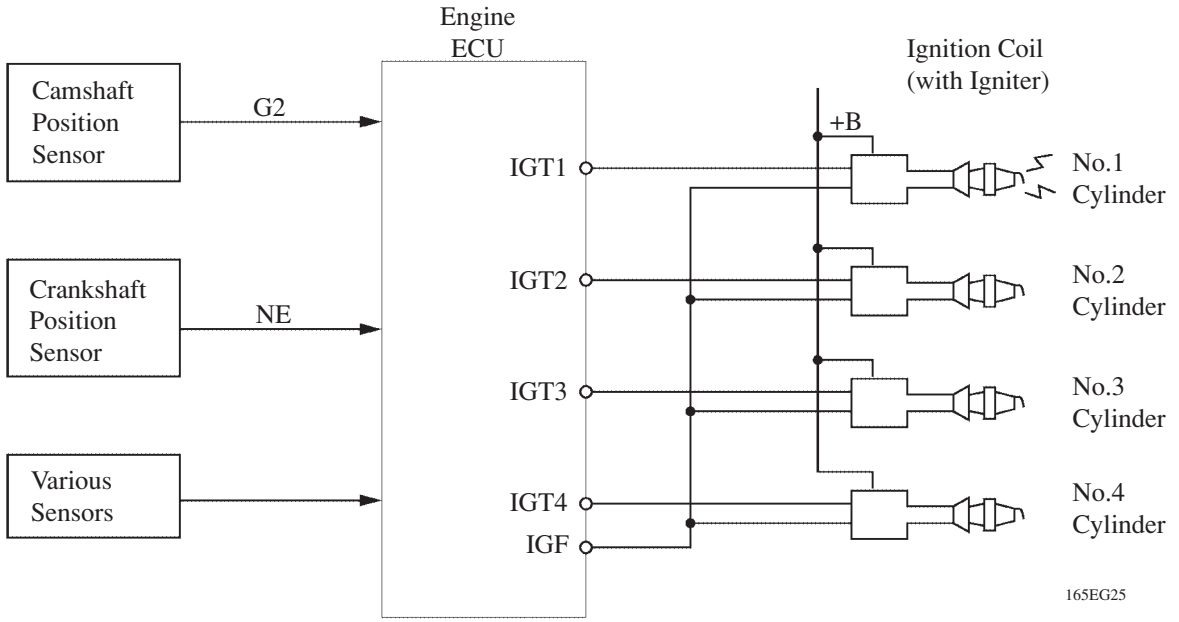

Ignition Coil

The DIS provides 4 ignition coils, one for each cylinder. The spark plug caps, which provide contact to the spark plugs, are integrated with an ignition coil. Also, an igniter is enclosed to simplify the system.

Spark Plug

Iridium-tipped spark plugs have been adopted to realize a 192,000 km (120,000 mile) maintenance-free operation. By making the center electrode of iridium, the same ignition performance as of the platinum-tipped spark plug and further improvement of durability have been realized.

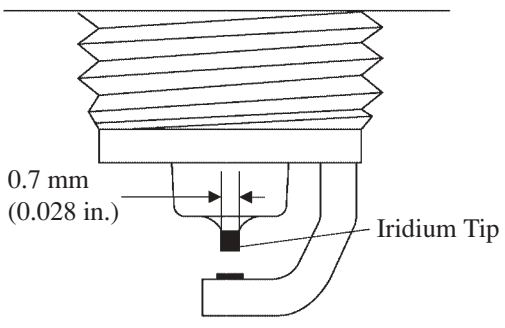

▶ Specifications ◀

DENSO	SK20R11
NGK	IFR6A11
Plug Gap	1.0 – 1.1 mm (0.0394 – 0.043 in.)

11. Charging System

General

- Instead of the conventional type alternator, a compact and lightweight segment conductor type alternator has been adopted for automatic transaxle model. This type of alternator generates high amperage output in a highly efficient manner.
- This alternator has a joined segment conductor system, in which multiple segment conductors are welded together to form the stator. Compared to the conventional winding system, the electrical resistance is reduced due to the shape of the segment conductors, and their arrangement helps to make the alternator more compact.
- The charging of this alternator is controlled by the engine ECU. For details, see page 214.

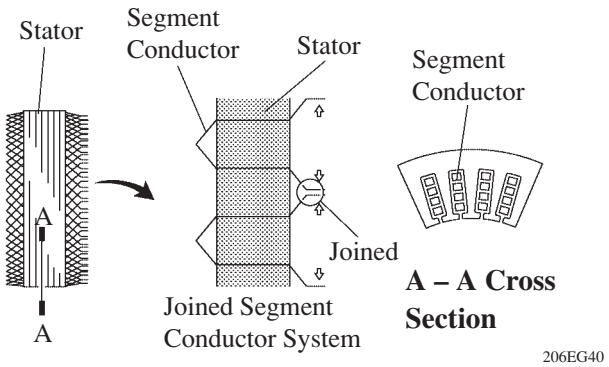

Segment Conductor Type Alternator

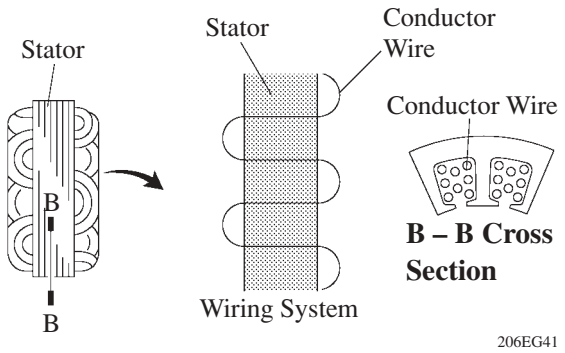

Conventional Type Alternator

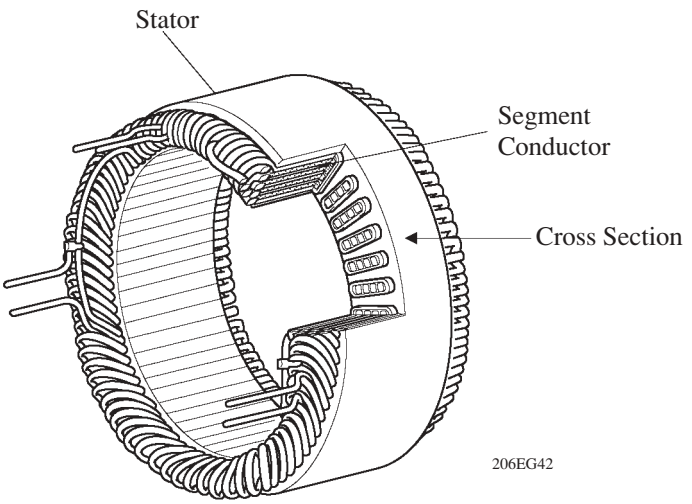

Stator of Segment Conductor Type Alternator

▶ Specifications ◀

Type	Segment Conductor (SC1)
Rated Voltage	12 V
Output Rated	130 A
Initial Output Starting Speed	1300 rpm Max.

▶ Wiring Diagram ◀

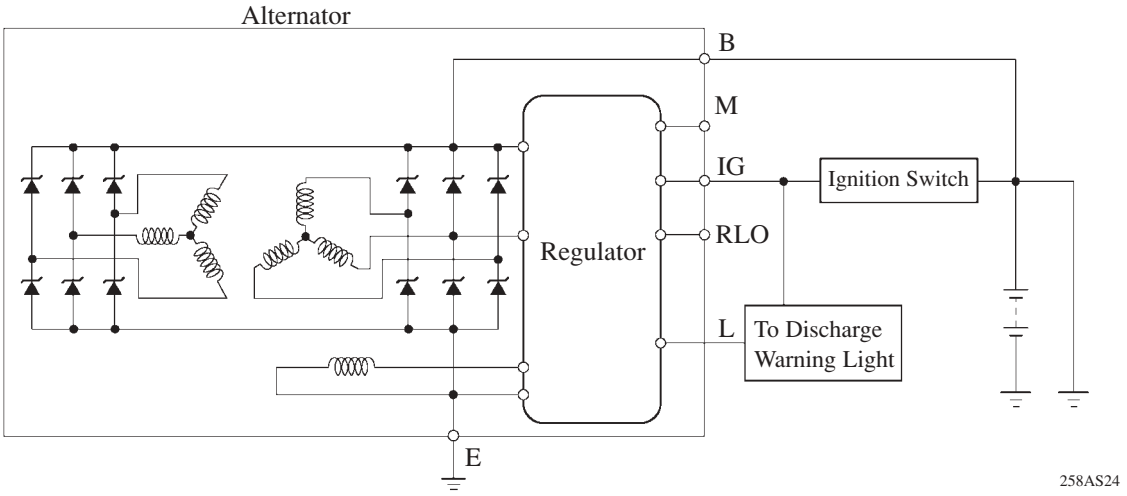

Service Tip

Although the charging circuit of a conventional alternator is checked through the F terminal, this check cannot be performed on the Segment Conductor type alternator through the use of the F terminal because the F terminal has been eliminated.

Dual Winding System

A dual winding system has been adopted. This system consists of two sets of three-phase windings whose phases are staggered 30°. Because the magnetic fluctuations of the respective windings cancel each other out, magnetic noise, radio frequency interference is reduced.

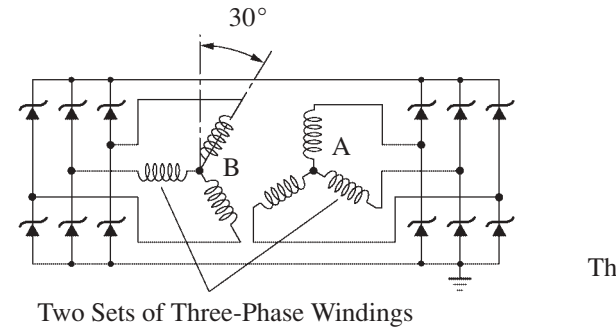

Segment Conductor Type Alternator

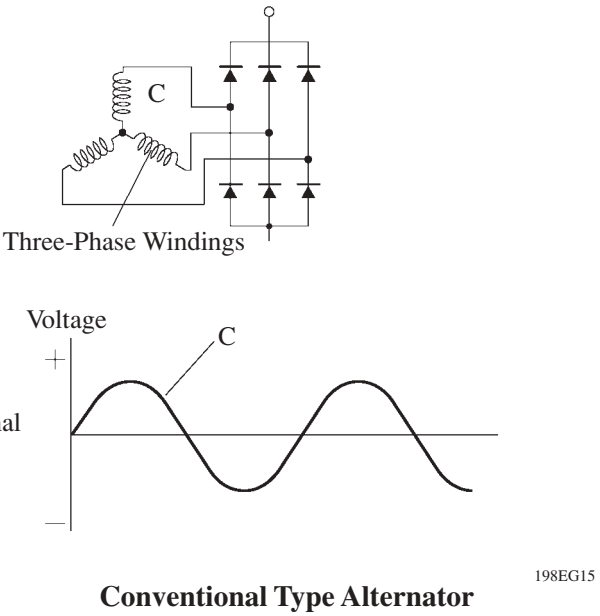

Conventional Type Alternator

12. Serpentine Belt Drive System

General

- Accessory components are driven by a serpentine belt consisting of a single V-ribbed belt. It reduces the overall engine length, weight and number of engine parts.
- An automatic tensioner eliminates the need for tension adjustment.

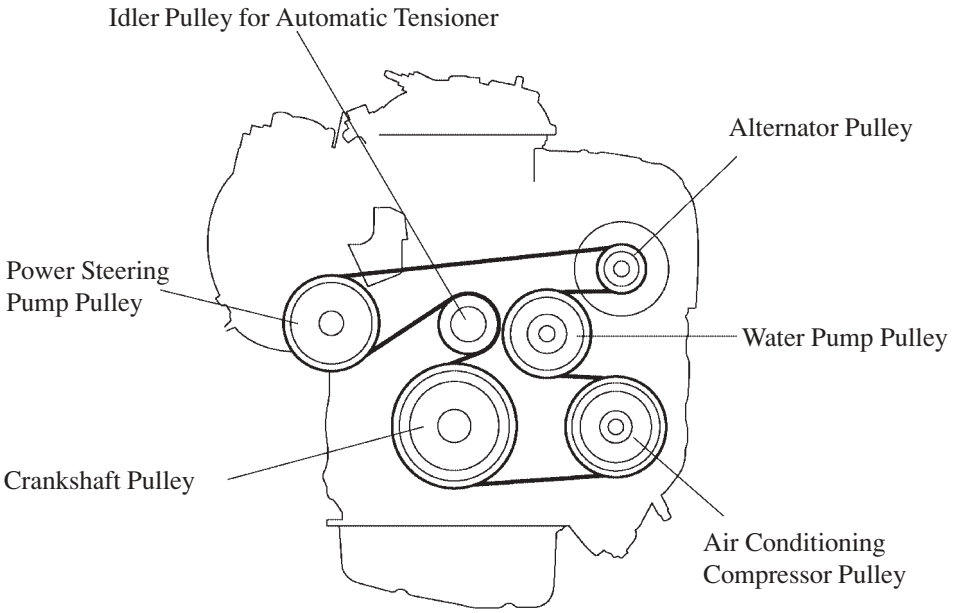

Automatic Tensioner

- The automatic tensioner consists of an idler pulley and a tensioner. The idler pulley maintains belt tension by the force of the spring that is located in the tensioner.
- Due to the different suppliers used, the tensioner comes in two types, although their basic operation remain the same and they are interchangeable.

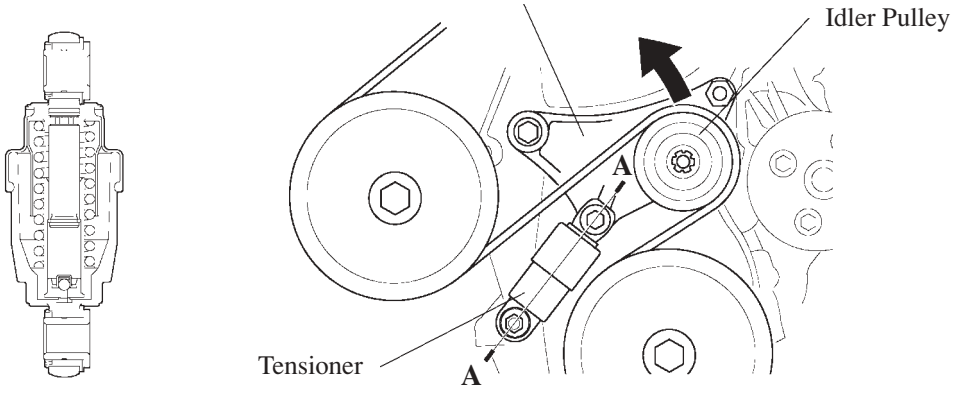

A – A Cross Section

13. Engine Control System

General

The engine control system of the 2AZ-FE engine has following system.

System	Outline	New 2AZ-FE	Previous 1AZ-FE
EFI (Electronic Fuel Injection)	An L-type EFI system directly detects the intake air mass with a hot wire type air flow meter.	○	○
ESA (Electronic Spark Advance)	Ignition timing is determined by the engine ECU based on signals from various sensors. The engine ECU corrects ignition timing in response to engine knocking.	○	○
ETCS-i (Electronic Throttle Control System-intelligent) (See page 174)	● Optimally controls the throttle valve opening in accordance with the amount of accelerator pedal effort and the condition of the engine and the vehicle. ● A link-less type is used, without an accelerator cable. ● A contact type accelerator pedal position sensor is provided on the accelerator pedal. ● A no-contact type throttle position sensor is used. ● Controls the fast idle and idle speed.	○	—
VVT-i (Variable Valve Timing-intelligent) (See page 212)	Controls the intake camshaft to an optimal valve timing in accordance with the engine condition.	○	○
Oxygen Sensor Heater Control	Maintains the temperature of the oxygen sensor at an appropriate level to increase accuracy of detection of the oxygen concentration in the exhaust gas.	○	○
Air Conditioner Cut-off Control*	By turning the air conditioner compressor ON or OFF in accordance with the engine condition, drivability is maintained.	○	○
Cooling Fan Control (See page 213)	Radiator cooling fan operation is controlled by water temperature sensor signal (THW) and the condition of the air conditioner operation.	○	○
Charging Control (See page 214)	The engine ECU regulates the charging voltage of the alternator in accordance with the driving conditions and the battery's state of charge.	○	—
Fuel Pump Control	Fuel pump operation is controlled by signal from the engine ECU.	○	○
	A fuel cut control is adopted to stop the fuel pump when any airbag is deployed during front or side collision.	○	○
Evaporative Emission Control	The engine ECU controls the purge flow of evaporative emission (HC) in the charcoal canister in accordance with engine conditions.	○	○
Engine Immobilizer	Prohibits fuel delivery and ignition if an attempt is made to start the engine with an invalid ignition key.	○	○
	The ID code stored in the transponder key ECU is compared with that of the transponder tip in the ignition key.	○	—
Diagnosis (See page 216)	When the engine ECU detects a malfunction, the engine ECU dragnoses and memorized the failed section.	○	○
	All the DTCs (Diagnostic Trouble Codes) have been made to correspond to the SAE controlled codes.	○	—
Fail-Safe (See page 216)	When the engine ECU detects a malfunction, the engine ECU stops or controls the engine according to the data already stored in the memory.	○	○

*: With Air Conditioner Model

Construction

The configuration of the engine control system in the 2AZ-FE engine in the new Avensis Verso is as shown in the following chart.

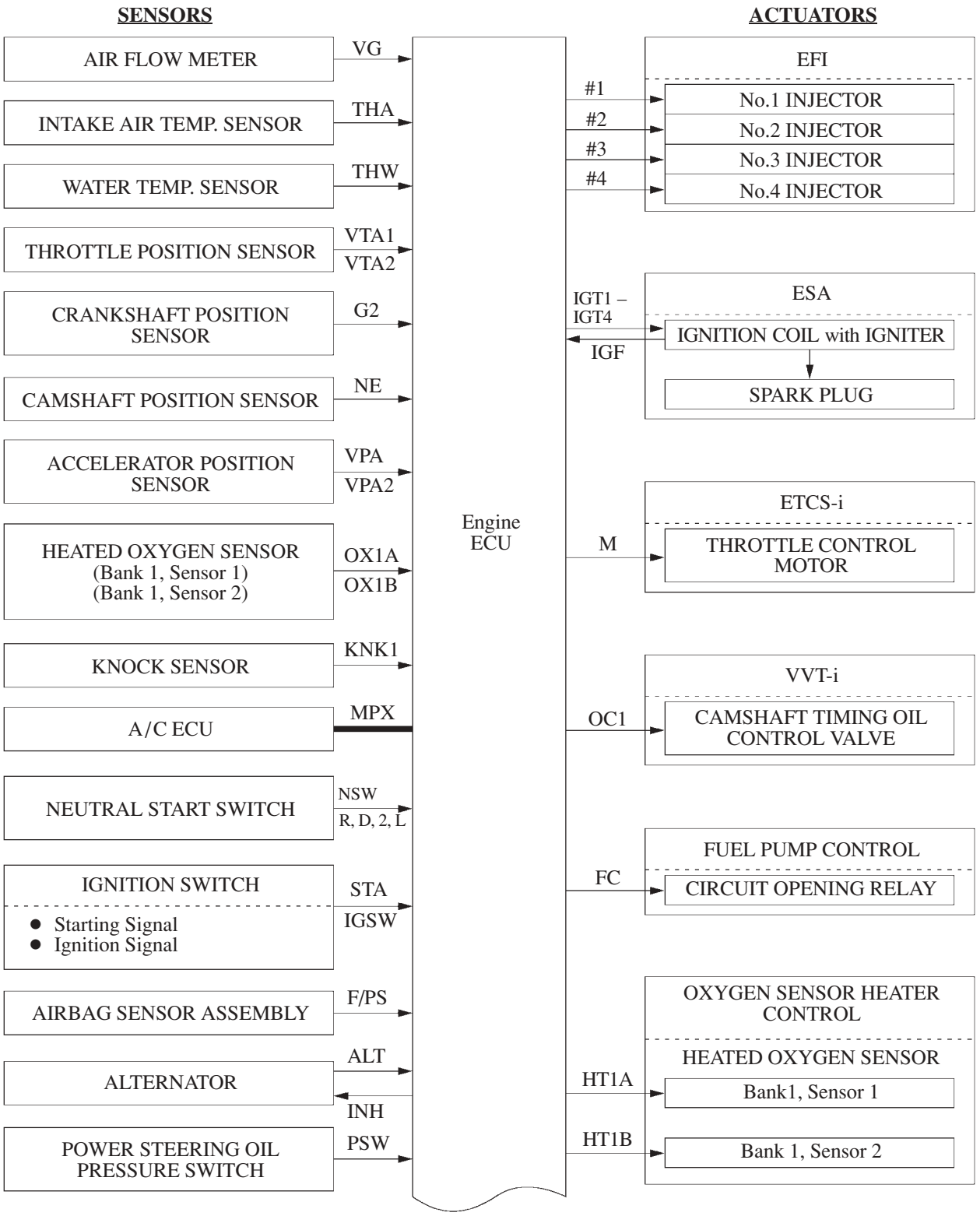

(Continued)

▬: BEAN

258AS25

4

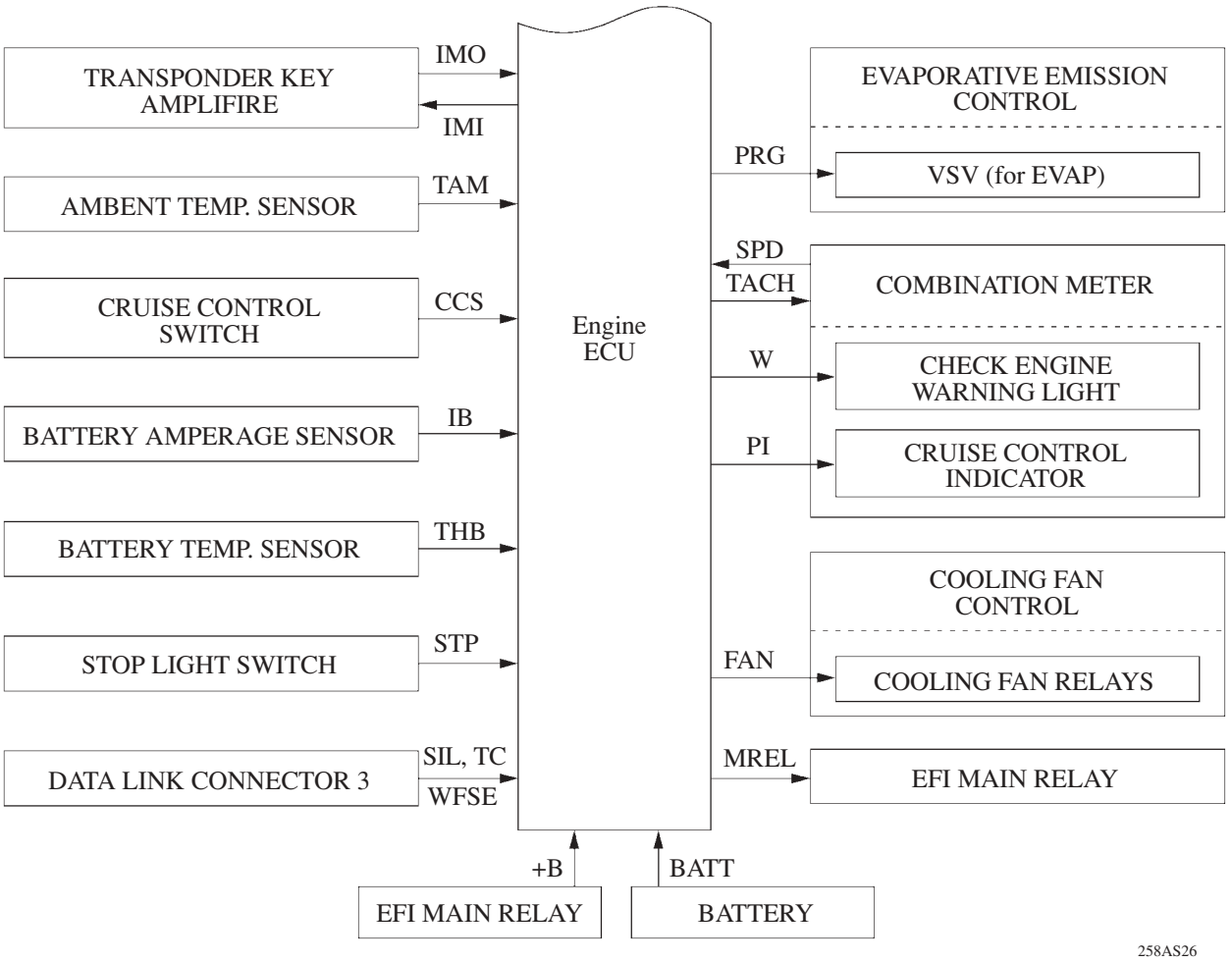
TRANSPONDER KEY AMPLIFIRE
IMO
IMI
AMBENT TEMP. SENSOR
TAM
CRUISE CONTROL SWITCH
CCS
BATTERY AMPERAGE SENSOR
IB
BATTERY TEMP. SENSOR
THB
STOP LIGHT SWITCH
STP
DATA LINK CONNECTOR 3
SIL, TC
WFSE
Engine ECU
+B
BATT
EFI MAIN RELAY
BATTERY
EVAPORATIVE EMISSION CONTROL
PRG
VSV (for EVAP)
SPD
TACH
COMBINATION METER
W
CHECK ENGINE WARNING LIGHT
PI
CRUISE CONTROL INDICATOR
COOLING FAN CONTROL
FAN
COOLING FAN RELAYS
MREL
EFI MAIN RELAY
258AS26

Engine Control System Diagram

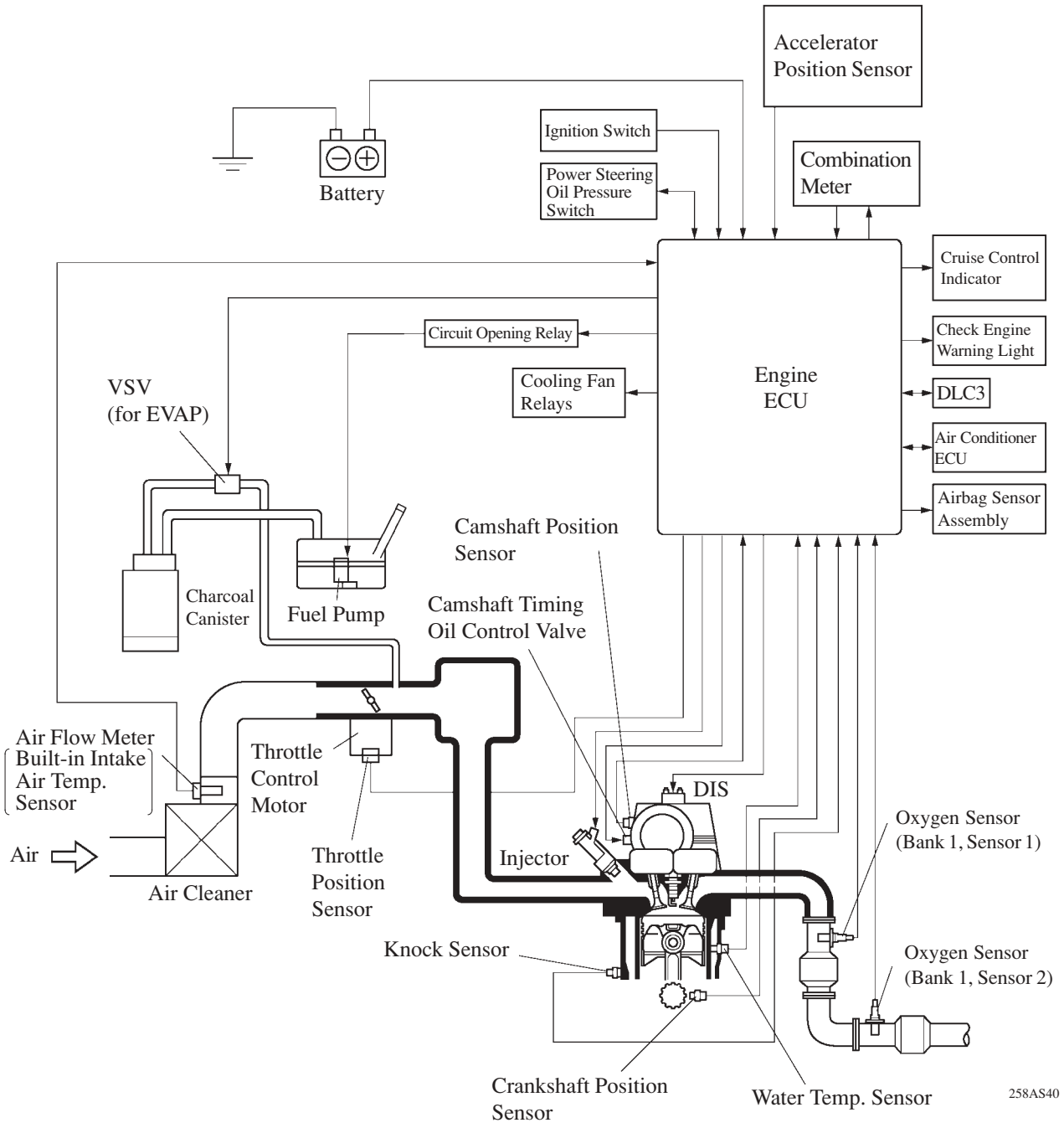

Layout of Main Components

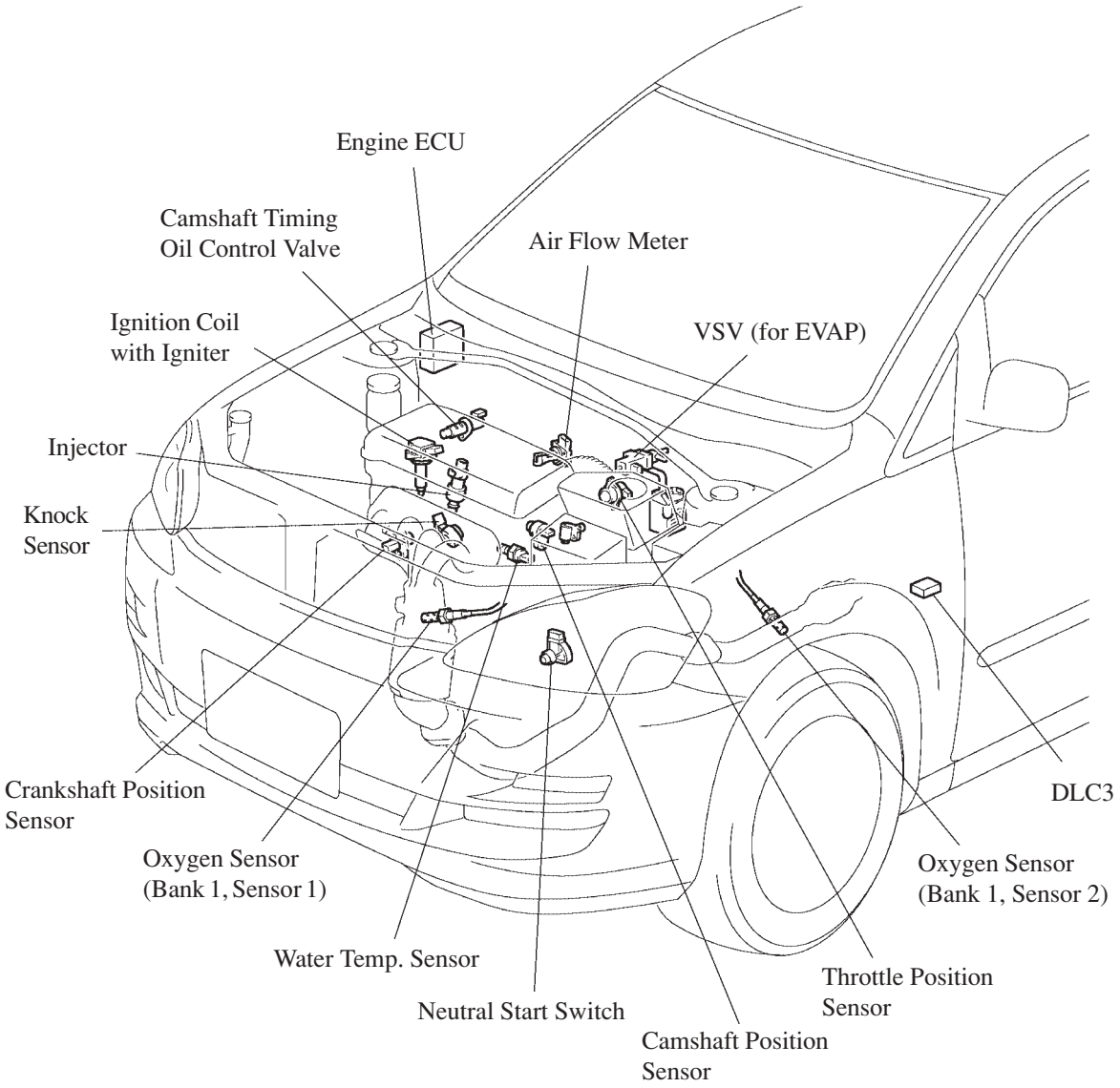

258AS17

Main Components of Engine Control System

1) General

The following table shows the main components.

Components	New (2AZ-FE)		Previous (1AZ-FE)	
	Outline	Quantity	Outline	Quantity
Engine ECU	32-bit CPU	1	←	1
Air Fuel Ratio Sensor (Bank 1, Sensor 1)	—		with Heater Type (Cup type)	2
Oxygen Sensor (Bank 1, Sensor 1)	with Heater Type (Cup type)	1	—	
Oxygen Sensor (Bank 1, Sensor 2)	with Heater Type (Cup type)	1	←	2
Air Flow Meter	Hot-wire Type	1	←	
Crankshaft Position Sensor (Rotor Teeth)	Pick-up Coil Type (36-2)	1	←	
Camshaft position Sensor (Rotor Teeth)	Pick-up Coil Type (3)	1	←	
Knock Sensor	Built-in Piezoelectric Element Type (Flat Type)	1	Built-in Piezoelectric Element Type (Resonant Type)	1
Accelerator Pedal Position Sensor	Contact Type	1	—	
Throttle Position Sensor	No-contact Type	1	Contact Type	1

2) Knock Sensor (Flat type)

The same knock sensor as the 1AZ-FE engine has been adopted. For details, see page 169.

3) Accelerator Pedal Position Sensor (Contact type)

The same accelerator pedal position sensor as the 1AZ-FE engine has been adopted. For details, see page 172.

4) Throttle Position Sensor (No-contact type)

The same throttle position sensor as the 1AZ-FE engine has been adopted. For details, see page 173.

ETCS-i (Electronic Throttle Control System-intelligent)

The same ETCS-i control as the 1AZ-FE engine has been adopted. For details, see page 174.

VVT-i (Variable Valve Timing-intelligent) System

The VVT-i system designed to control the intake camshaft within a wide range of 50° (of crankshaft angle) to provide a valve timing that is optimally suited to the engine condition, thus realizing improved torque in all the speed ranges and fuel economy, and reduce exhaust emission. The actual intake valve timing is feedback by means of the camshaft position sensor for constant control to the target valve timing.

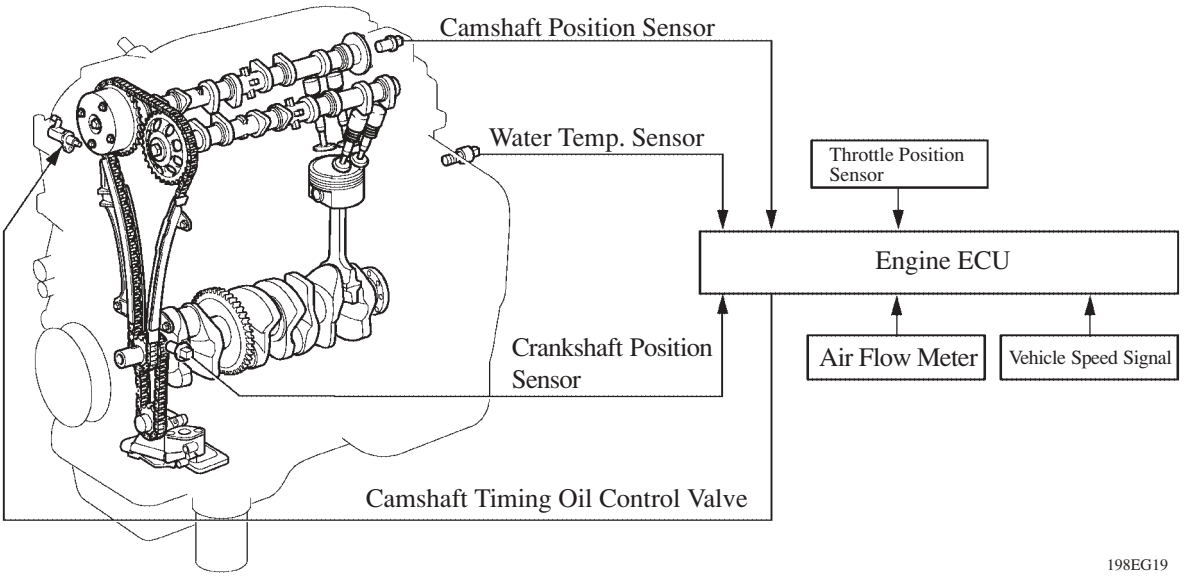

198EG19

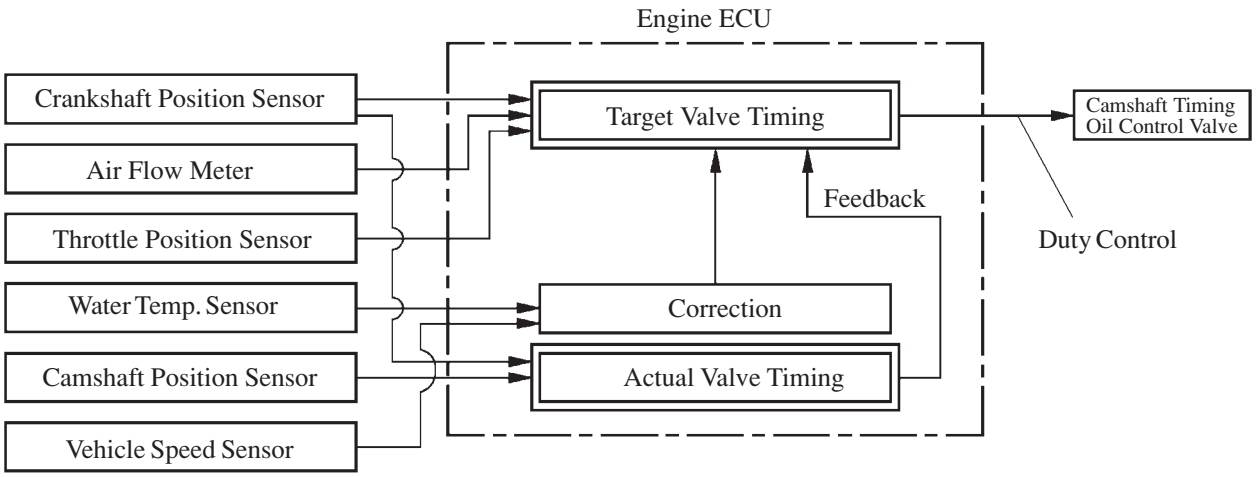

172CR07

Cooling Fan Control

A cooling fan system in which the engine ECU controls the cooling fan speed in accordance with the signals from the water temperature sensor, etc. has been adopted.
The engine ECU controls the cooling fan speeds in accordance with the water temperature and the operating conditions of the A/C compressor, A/C pressure switch. This control is accomplished by operating the 2 fan motors in 2 stages through low speed (series connection) and high speed (parallel connection).

▶ Wiring Diagram ◀

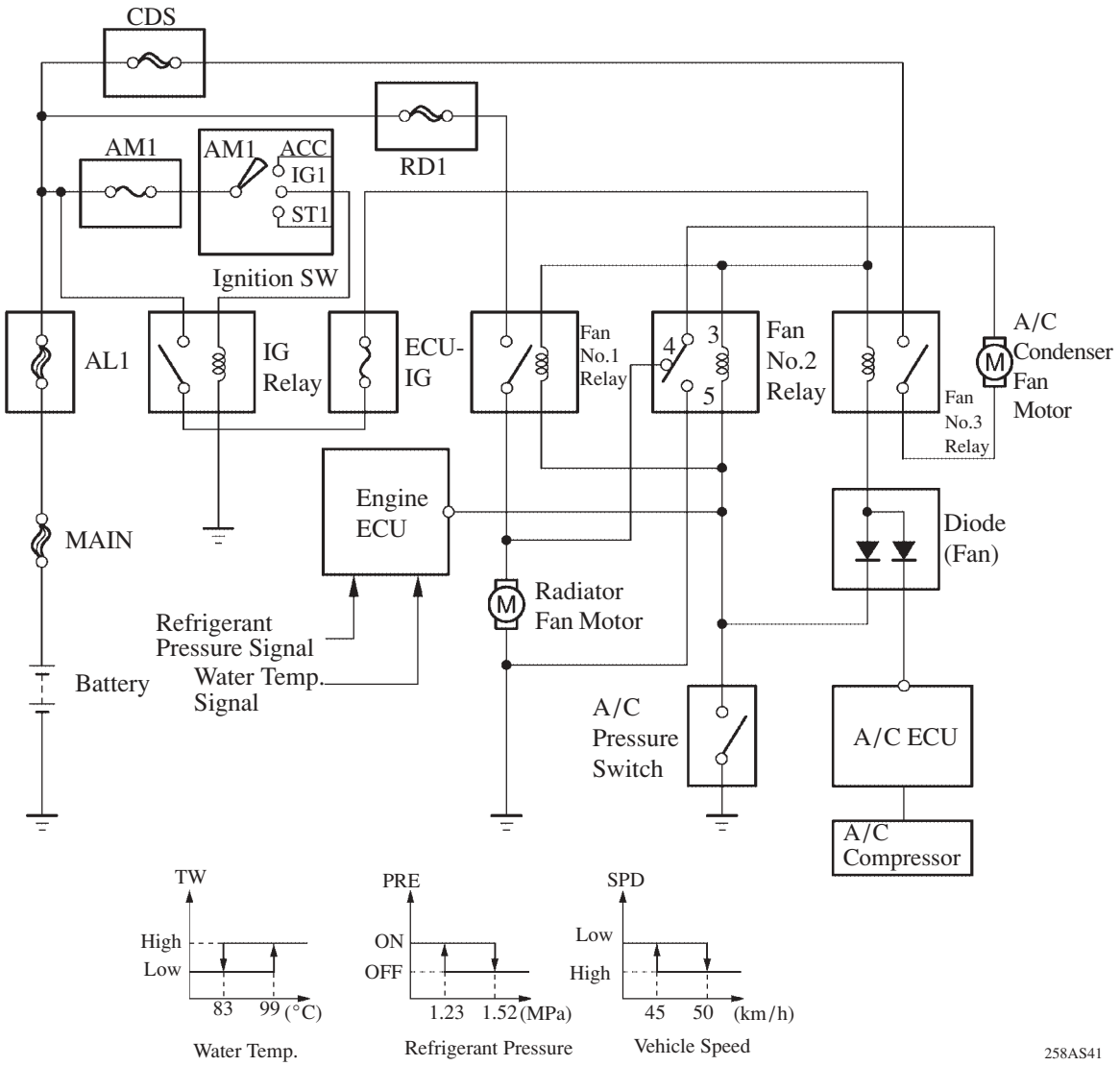

▶ Cooling Fan Operation ◀

A/C Compressor	Water Temperature	A/C Pressure Switch	Vehicle Speed	Relay Operation			Cooling Fan Operation	Cooling Fan Motor Connection
				No.1	No.2	No.3		
OFF	High	–	–	ON	3 to 5	ON	High	Parallel
	Low	–	–	OFF	3 to 4	OFF	OFF	OFF
ON	High	–	–	ON	3 to 5	ON	High	Parallel
	Low	ON	–	ON	3 to 5	ON	High	Parallel
		OFF	Low	OFF	3 to 4	ON	Low	Series
			High	OFF	3 to 4	OFF	OFF	OFF

Charging Control

1) General

The engine ECU decreases the voltage generated by the alternator during acceleration of the vehicle, and increases the generated voltage during deceleration. This control reduces the load imposed on the engine by the alternator during generation, in order to promote the fuel economy of the engine.
During idling and constant-speed driving, the engine ECU regulates the generated voltage. This is performed in accordance with the battery input and output amperage values, which are detected by the current sensor and tallied by the engine ECU.

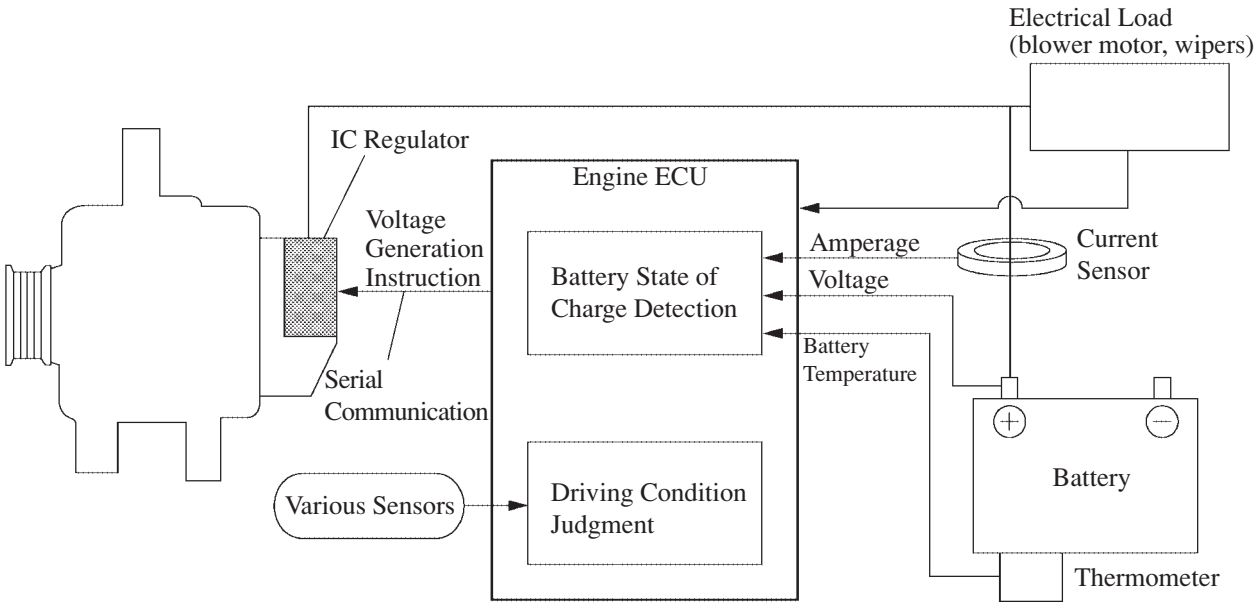

258AS29

Charging Control Operation Example:

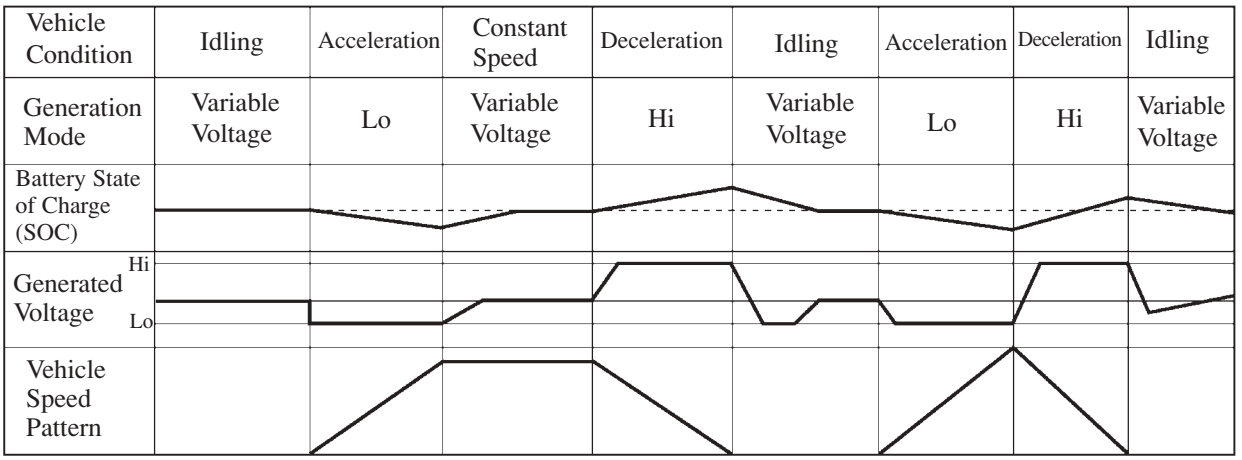

258AS30

▶ Function of Main Components ◀

Item	Outline
Engine ECU	Controls the generated voltage of the alternator according to the battery condition and vehicle driving condition.
Current Sensor	Measures the input and output current, and outputs to the engine ECU.
Thermometer	Measures the battery temperature by thermistor, and outputs to the engine ECU.

2) Current Sensor

The Current Sensor installed in the positive terminal of battery measures the battery input and output current.
The battery input and output current is used to judge the battery state of charge by engine ECU.

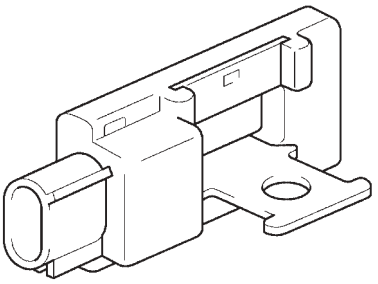

258AS58

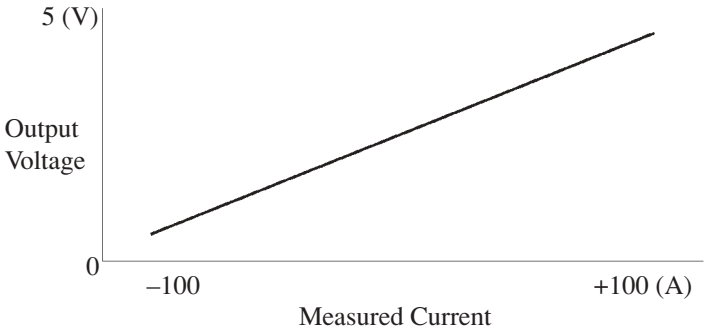

Characteristic of Current Sensor

258AS61

3) Thermometer

The Thermometer is installed on the battery tray. The thermistor on the sensor measures the battery temperature. Thermistor is thermally sensitive resister which varies a resistance value significantly in accordance with temperature changing.
Battery temperature is used to judge the battery state of charge by engine ECU.

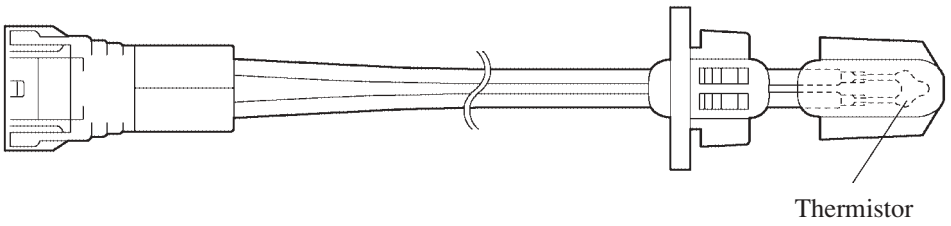

258AS59

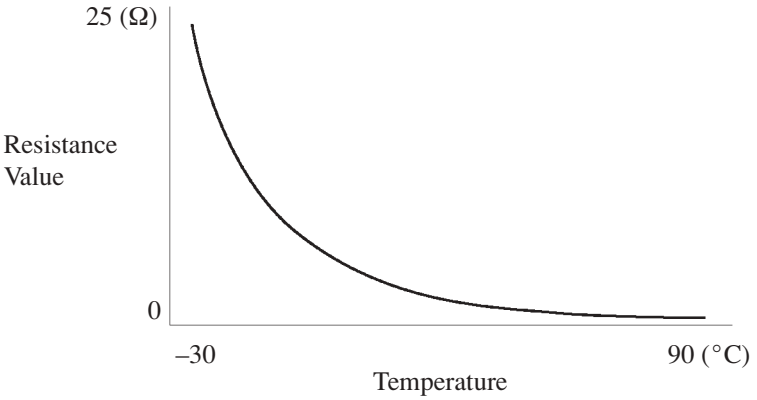

Characteristic of Battery Thermometer

258AS60

Diagnosis

- When the engine ECU detects a malfunction, the engine ECU makes a diagnosis and memorizes the failed section.
  Furthermore, the check warning light in the combination meter illuminates or blinks to inform the driver.
- The engine ECU will also store the DTCs (Diagnostic Trouble Codes) of the malfunctions.
- The DTCs can be accessed the use of the hand-held tester.
- All the DTCs have been made to correspond to the SAE controlled codes. For details, refer to the Avensis Verso Repair Manual (Pub. No. RM1032E).

Service Tip

To clear the DTC that is stored in the engine ECU, use a hand-held tester, or disconnect the battery terminal, or remove the EFI fuse for 1 minute or longer.

Fail-Safe

When the engine ECU detects a malfunction, the engine ECU stops or controls the engine according to the data already stored in the memory.

▶ Fail-Safe Chart ◀

DTC No.	Fail-Safe Operation	Fail-Safe Deactivation Conditions
P0100, P0102, P0103	Ignition timing is calculated from engine speed and a throttle angle.	Return to normal condition.
P0110, P0112, P0113	Intake air temp. is fixed at 20°C (68°F).	Return to normal condition.
P0115, P0117, P0118	Water temp. is fixed at 80°C (176°F).	Return to normal condition.
P0120, P0122, P0123, P0220, P0222, P0223, P2135	Fuel cut intermittently when idle.	Return to normal condition and ignition switch OFF.
P0325, P0327, P0328	Max. timing retardation.	Ignition switch OFF.
P0351, P0352, P0353, P0354	Fuel cut.	Return to normal condition.
P0516, P0517, P1550, P1551, P1552, P1602	Charging Control is stopped.	Return to normal condition.
P0604, P0606, P0607, P0657	Fuel cut intermittently when idle.	Return to normal condition and ignition switch OFF.
P2102, P2103	Fuel cut intermittently when idle.	Return to normal condition and ignition switch OFF.
P2111, P2112	Fuel cut intermittently when idle.	Return to normal condition and ignition switch OFF.
P2118, P2119	Fuel cut intermittently when idle.	Return to normal condition and ignition switch OFF.

■ 1CD-FTV ENGINE

Cooling System

The TOYOTA genuine Super Long Life Coolant (SLLC) has been adopted. As a result, the maintenance interval has been extended. For details, see page 157

▶ Specifications ◀

Model			New	Previous
Engine Coolant	Capacity liters (US qts, Imp. qts)	with heater	8.8 (9.3, 7.7)	←
		without heater	7.6 (8.0, 6.7)	

■SHOCK ABSORBER

1. General

A multi-leaf type linear control valve has been adopted to attain linear damping force characteristics.

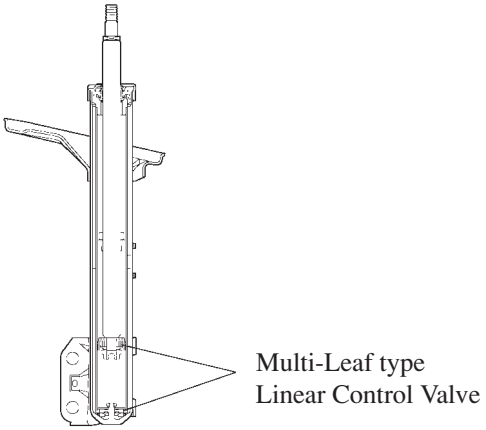

258AS47

2. Construction of Multi-Leaf type Linear Control Valve

The multi-leaf type linear control valve has a structure of several layered leaf valves with different diameter. With the adoption of the multi-leaf type linear control valve, the changes in the damping force are made constant at low piston speeds, thus it realize the excellent riding comfort and controllability.

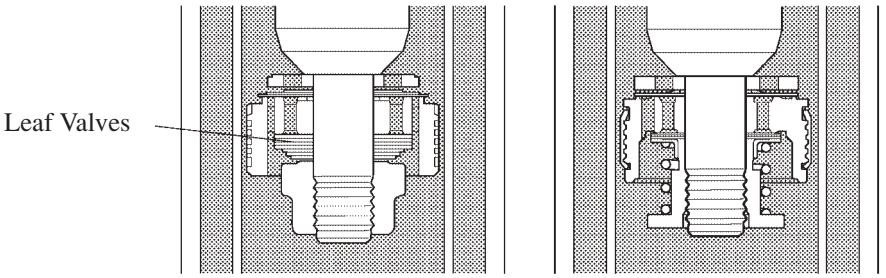

258AS48

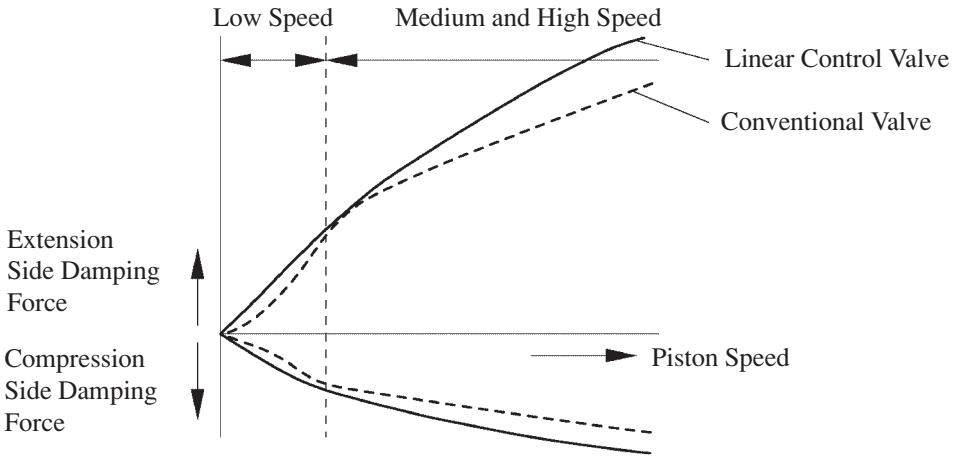

Damping Force Characteristics

258AS49

■BRAKE

1. Brake Control System (ABS with EBD and Brake Assist)

Brake Actuator

1) General

Along with the new provision of the mechanical type brake assist as standard equipment, the master cylinder pressure sensor and the brake assist switching solenoid valve have been discontinued. As a result, the actuator has been made more compact and lightweight.

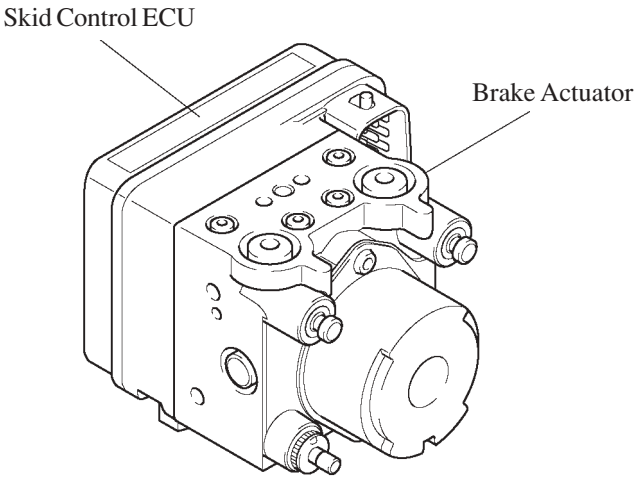

258AS51

▶ System Diagram ◀

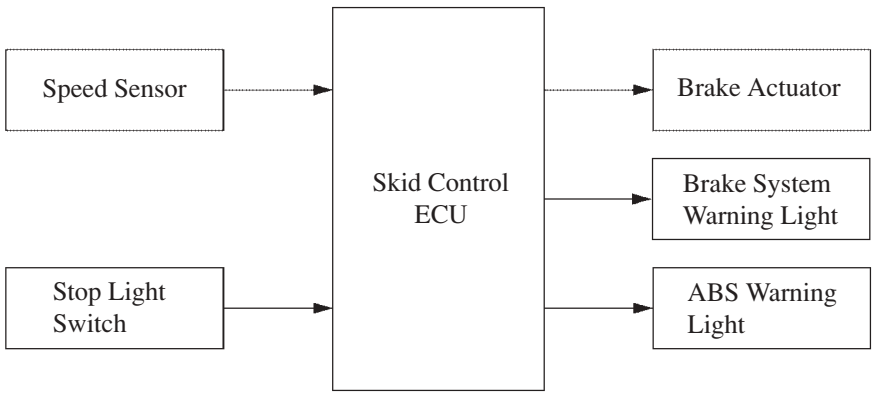

258AS52

2) Actuator Portion

The brake actuator consists of 8 two-position valves, 2 pumps, 1 motor, and 2 reservoirs. The 8 two-position solenoid valves consist of the following:

- 4 pressure holding valves [(1), (2), (3), (4)]
- 4 pressure reduction valves [(5), (6), (7), (8)]

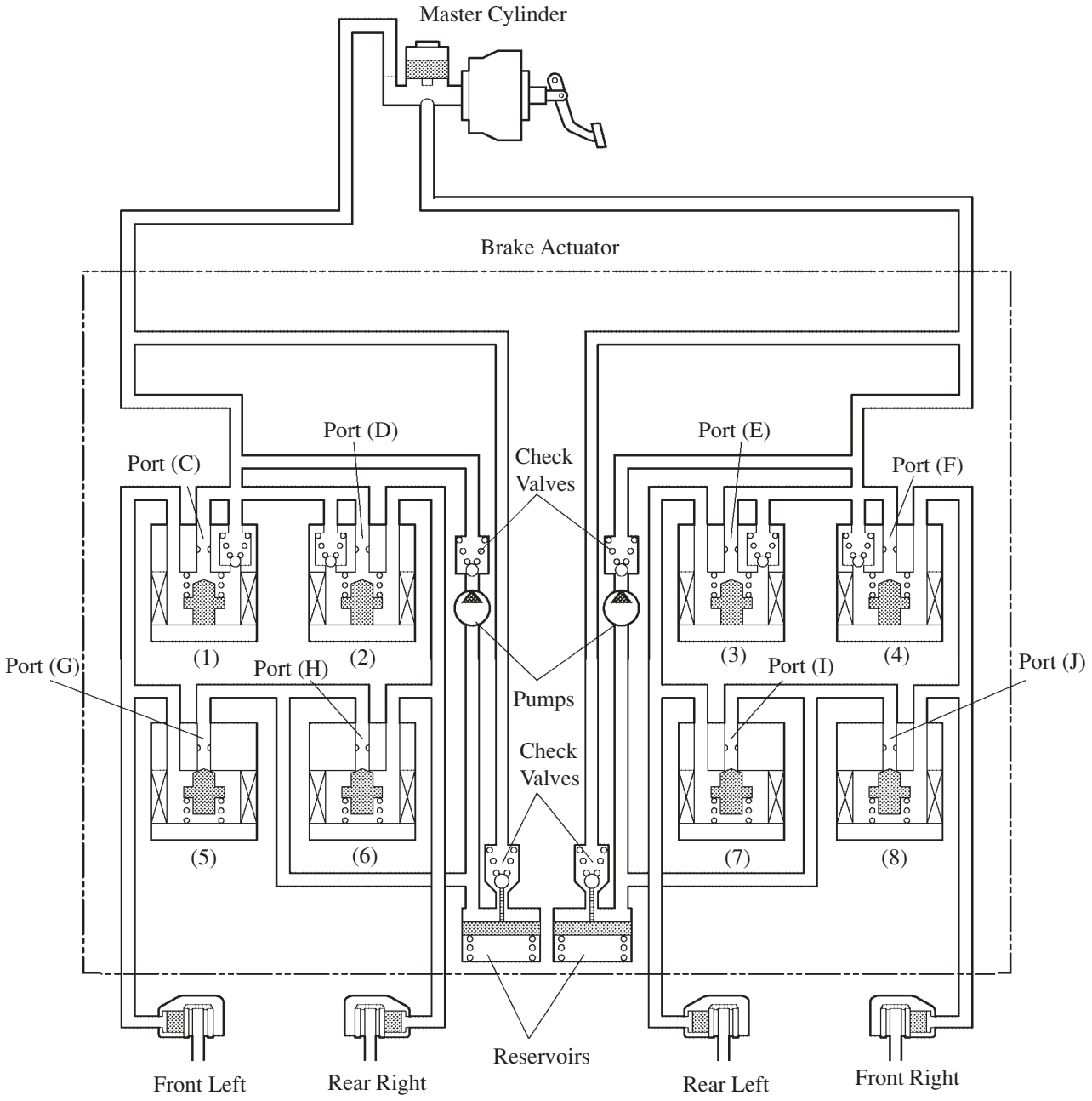

243CH73

▶ Function of Main Components ◀

Component		Function
(1), (2), (3), (4)	Pressure Holding Valve	Each wheel cylinder contains a pressure holding valve and a pressure reduction valve. A combination of the ON/OFF conditions of the respective valves is used in order to change the increase mode, holding mode, or the reduction mode during the operation of the ABS system.
(5), (6), (7), (8)	Pressure Reduction Valve	
Reservoir		While effecting the reduction mode during the operation of the ABS system, the reservoir stores the brake fluid that has returned from the wheel cylinders. It also functions as an accumulator.
Pump		Pumps the brake fluid that is stored in the reservoir and returns it to the master cylinder.
Check Valve		Check valves are located before and after the between the pump and reservoir. They open only in one direction to prevent the brake fluid from flowing backwards.

Brake Assist Operation (for Brake Assist Mechanical Type)

1) General

This brake booster consists of a conventional type brake booster to which a brake assist mechanism has been added. During a normal brake operation, the function of the brake booster is the same as in the conventional type. The major difference in construction between this booster from the conventional type is the addition of the slide valve and the slide valve hook in the air valve.

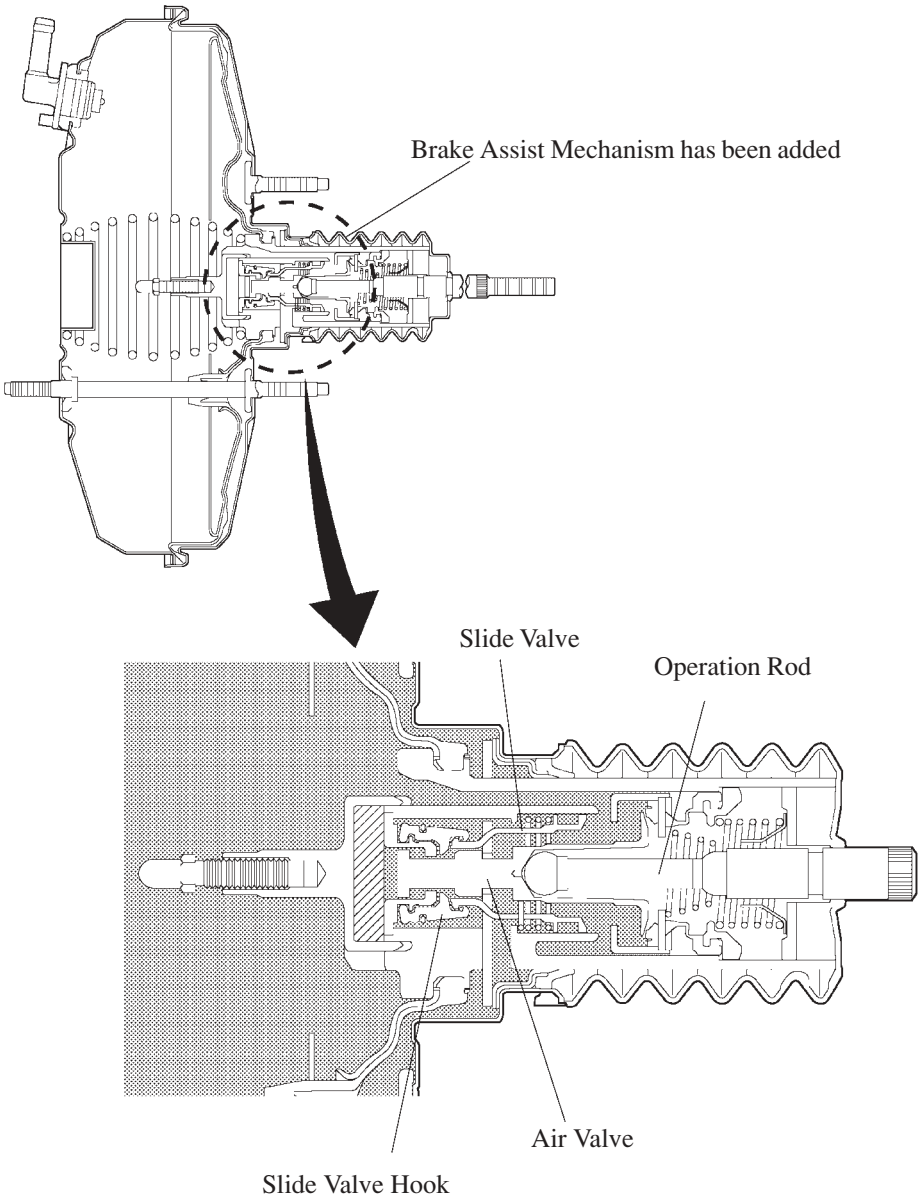

233CH84

2) Operation

No Braking Condition

The air valve closes, the control valve opens, and the pressure is the same in the variable pressure chamber and the constant pressure chamber.

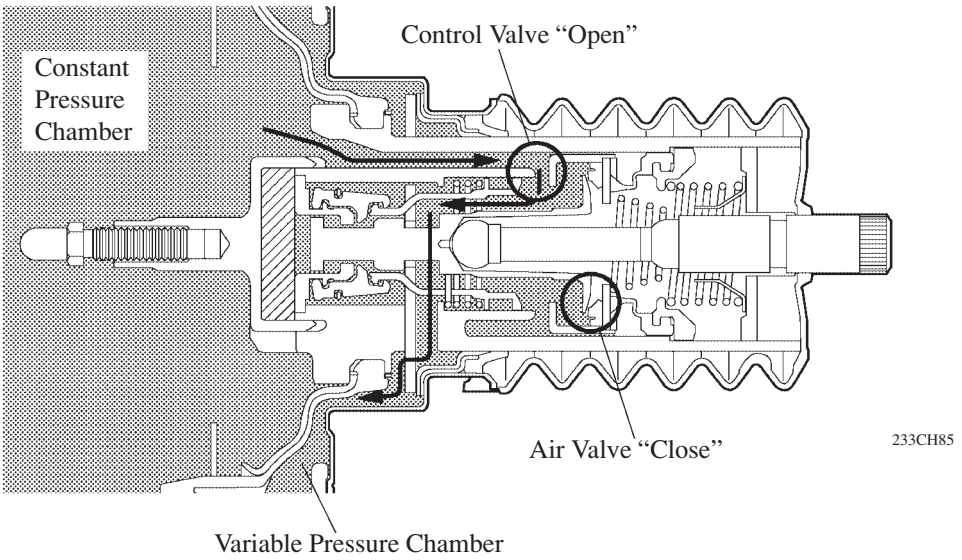

Normal Braking Condition (Operation Rod Speed = Power Piston Speed)

During normal braking, the air valve opens and the control valve closes to activate the brake booster function.

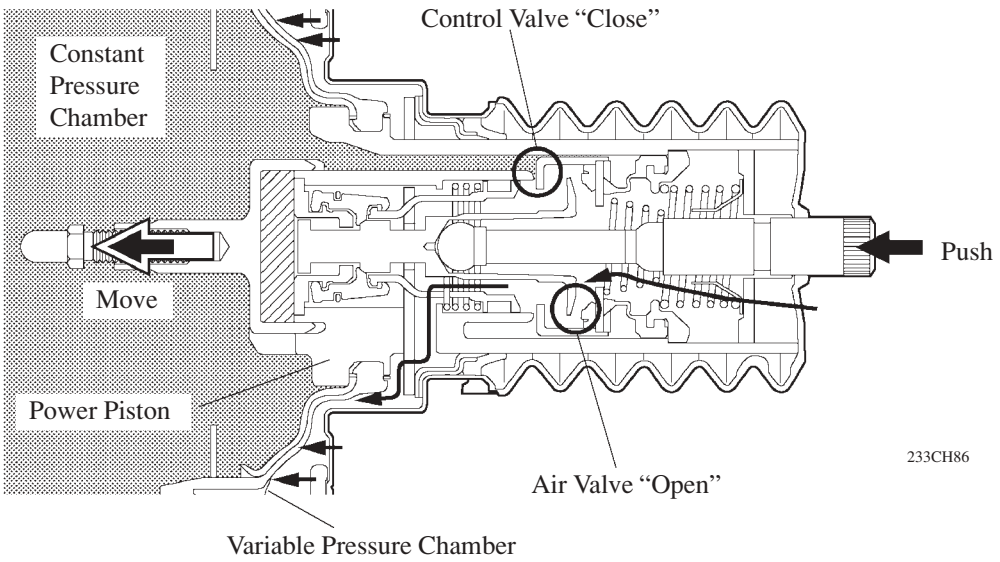

Brake Assist Condition (Operation Rod Speed > Power Piston Speed)

When the operation rod speed is faster than the power piston speed, the air valve pushes the slide valve hook. Consequently, the slide valve separates from the slide valve hook, the spring pushes the control valve, and the control valve closes. Thus, the opening of the air valve becomes enlarged and increases the volume of air that is introduced. This results in a brake assist force to powerfully push the power piston.

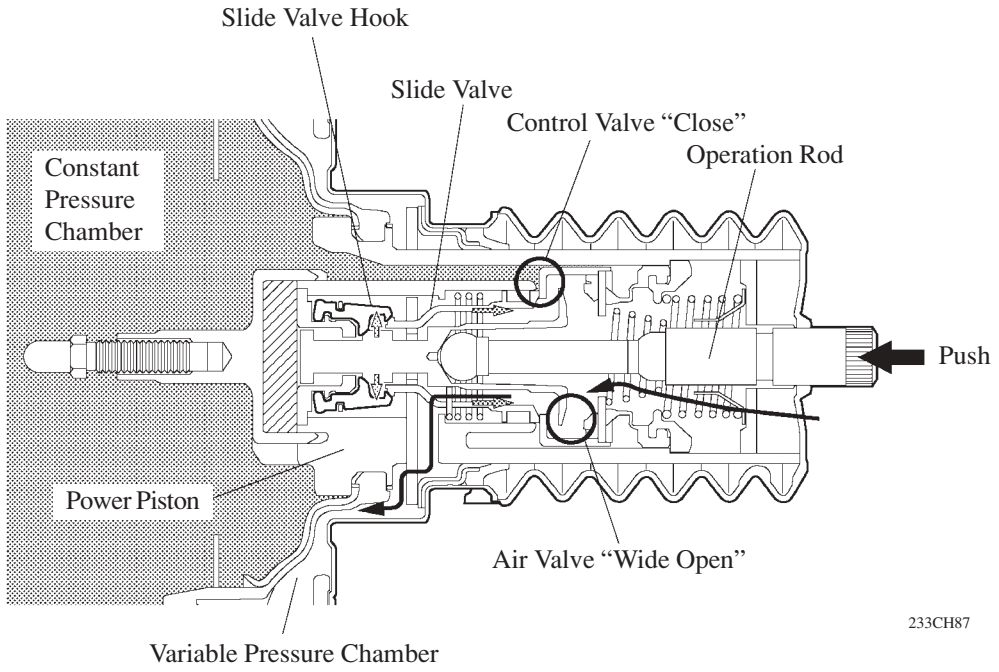

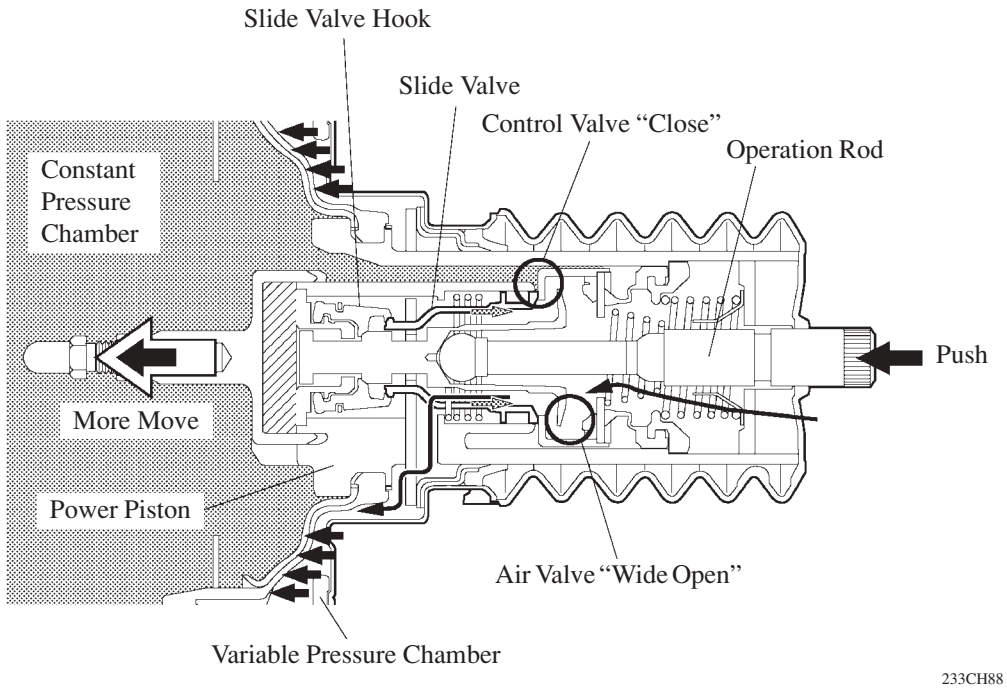

2. Brake Control System (ABS with EBD, Brake Assist, TRC and VSC)

General

- This model uses the CAN (Controller Area Network) communication system for communication between the skid control ECU, steering angle sensor and yaw rate & deceleration sensor.
- The "skid control ECU and brake actuator", and the "yaw rate sensor and deceleration sensor", are integrated units, respectively.
- A trochoid gear type pump has been adopted for the pump in the brake actuator.
- A pressure regulator valve has been adopted to regulate the pressure of the fluid that is supplied to the pump.

The brake control system (ABS with EBD, brake assist, TRC and VSC) has a following function:

Function	Outline
ABS (Anti-lock Brake System)	The ABS helps prevent the wheels from locking when the brakes are applied firmly or when braking on a slippery surface.
EBD (Electronic Brake force Distribution)	The EBD control utilizes ABS, realizing the proper brake force distribution between front and rear wheels in accordance with the driving conditions. In addition, during cornering braking, it also controls the brake forces of right and left wheels, helping to maintain the vehicle behavior.
Brake Assist	If the skid control ECU determines that the driver intends the emergency braking, the system activates the brake actuator to increase the brake fluid pressure, which increases the braking force.
TRC (Traction Control)	The TRC system helps prevent the drive wheels from slipping if the driver presses the accelerator pedal excessively when starting off or accelerating on a slippery surface.
VSC (Vehicle Stability Control)	The VSC system helps prevent the vehicle from slipping sideways as a result of strong front wheel skid or strong rear wheel skid during cornering.

Service Tip

When brake control system (ABS with EBD) is activated, the brake pedal could shudder, which is a normal occurrence of the system in operation and should not be considered a malfunction.

▶ System Diagram ◀

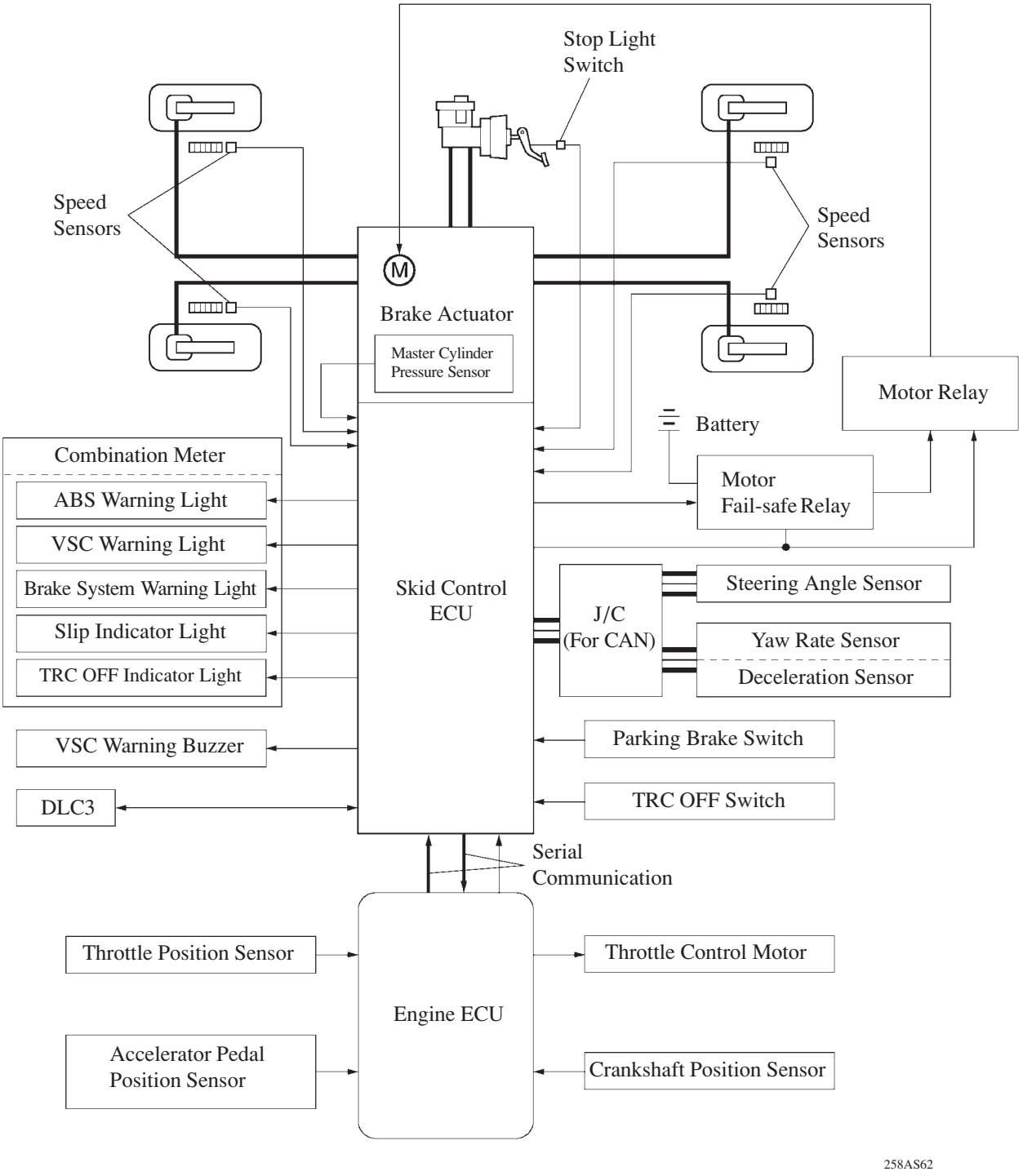

: CAN (Controller Area Network)

Outline of TRC System

- If the driver presses the accelerator pedal aggressively when starting off or accelerating on a slippery surface, the drive wheel could slip due to the excessive amount of torque that is generated. By applying hydraulic brake control to the drive wheels and regulating the throttle to control the engine output, the TRC system helps minimize the slippage of the drive wheels, thus generating the drive force that is appropriate for the road surface conditions.
- For example, a comparison may be made between two vehicles, one with the TRC system and the other without. If the driver of each vehicle operates the accelerator pedal in a rough manner while driving over a surface with different surface friction characteristics, the drive wheel on the slippery surface could slip as illustrated. As a result, the vehicle cannot start smoothly.
  However, when the vehicle is equipped with the TRC system, the skid control ECU instantly determines the state of the vehicle and operates the brake actuator in order to apply the brake of the slipping drive wheel. Furthermore, the engine ECU receives the signals from the skid control ECU and regulates the throttle in order to control the engine output. Thus, the system can help maintain a stable driving force.

▶ Driving Condition on Road with Different Surface Friction Characteristics ◀

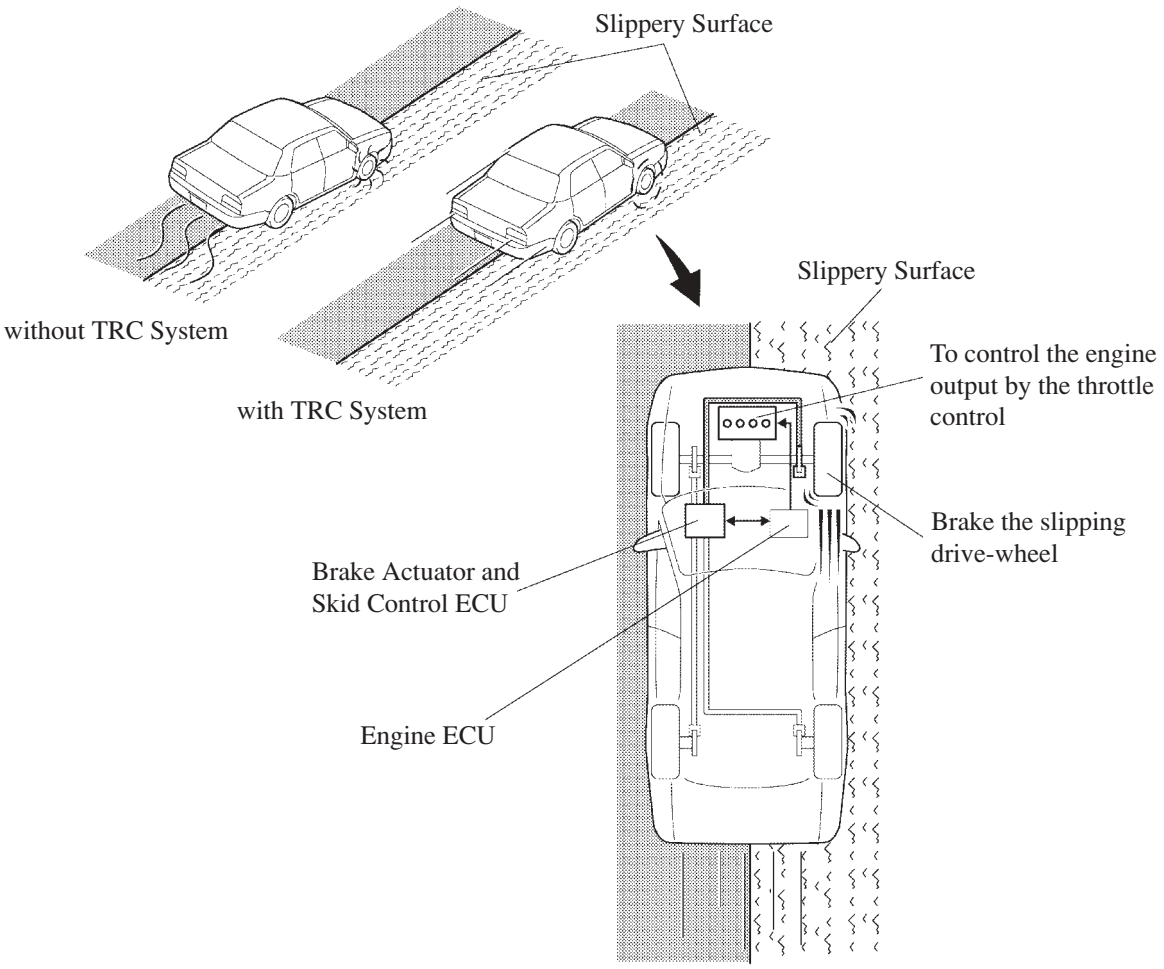

Outline of VSC System

1) General

The followings are two examples that can be considered as circumstances in which the tires exceed their lateral grip limit.
The VSC system is designed to help control the vehicle behavior by controlling the engine output and the brakes at each wheel when the vehicle is under one of the conditions indicated below.

- When the front wheels lose grip in relation to the rear wheels (front wheel skid tendency).
- When the rear wheels lose grip in relation to the front wheels (rear wheel skid tendency).

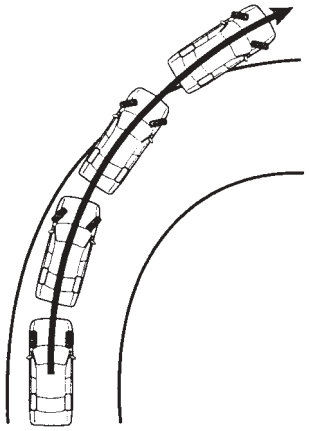

151CH17

Front Wheel Skid Tendency

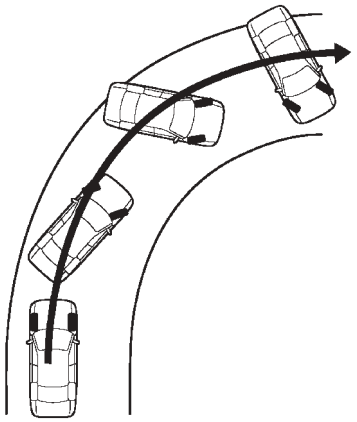

189CH100

Rear Wheel Skid Tendency

2) Method for Determining the Vehicle Condition

To determine the condition of the vehicle, sensors detect the steering angle, vehicle speed, vehicle's yaw rate, and the vehicle's lateral acceleration, which are then calculated by the skid control ECU.

Determining Front Wheel Skid

Whether or not the vehicle is in the state of front wheel skid is determined by the difference between the target yaw rate and the vehicle's actual yaw rate.
When the vehicle's actual yaw rate is smaller than the yaw rate (a target yaw rate that is determined by the vehicle speed and steering angle) that should be rightfully generated when the driver operates the steering wheel, it means the vehicle is making a turn at a greater angle than the locus of travel.
Thus, the skid control ECU determines that there is a large tendency to front wheel skid.

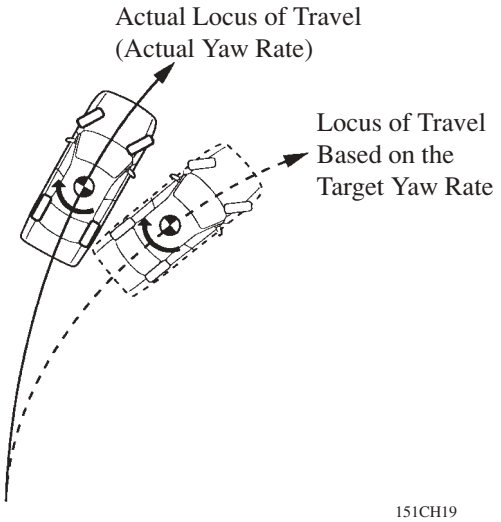

151CH19

Determining Rear Wheel Skid

Whether or not the vehicle is in the state of rear wheel skid is determined by the values of the vehicle's slip angle and the vehicle's slip angular velocity (time-dependent changes in the vehicle's slip angle).
When the vehicle's slip angle is large, and the slip angular velocity is also large, the skid control ECU determines that the vehicle has a large rear wheel skid tendency.

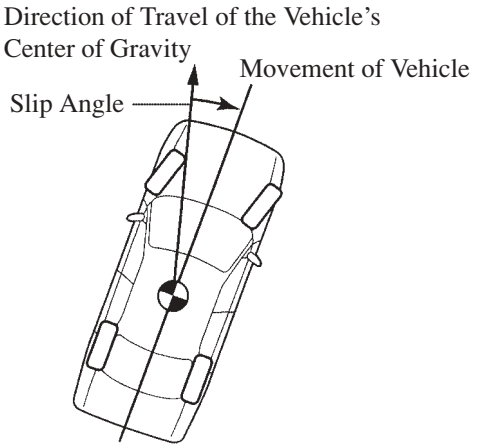

3) Method for VSC Operation

When the skid control ECU determines that the vehicle exhibits a tendency to front wheel skid or rear wheel skid, it decreases the engine output and applies the brake of a front or rear wheel to control the vehicle's yaw moment.
The basic operation of the VSC is described below. However, the control method differs depending on the vehicle's characteristics and driving conditions.

Dampening a Strong Front Wheel Skid

When the skid control ECU determines that there is a large front wheel skid tendency, it counteracts in accordance with the extent of that tendency. The skid control ECU controls the engine power output and applies the brakes of the front wheels and rear wheel of the inner circle of the turn in order to help restrain the front wheel skid tendency.

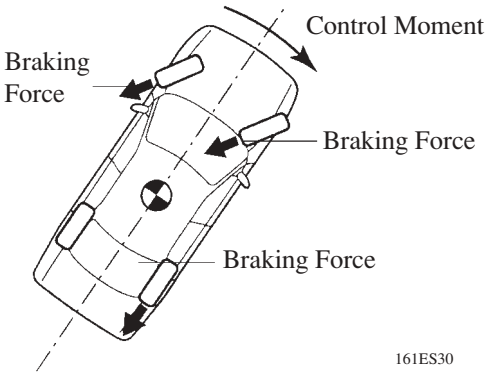

Making a Right Turn

Dampening a Strong Rear Wheel Skid

When the skid control ECU determines that there is a large rear wheel skid tendency, it counteracts in accordance with the extent of that tendency. It applies the brakes of the front wheel of the outer circle of the turn, and generates an outward moment of inertia in the vehicle, in order to help restrain the rear wheel skid tendency. Along with the reduction in the vehicle speed caused by the braking force, which helps dampen a strong rear wheel skid tendency.
In some cases, the skid control ECU applies the brake of the rear wheels, as necessary.

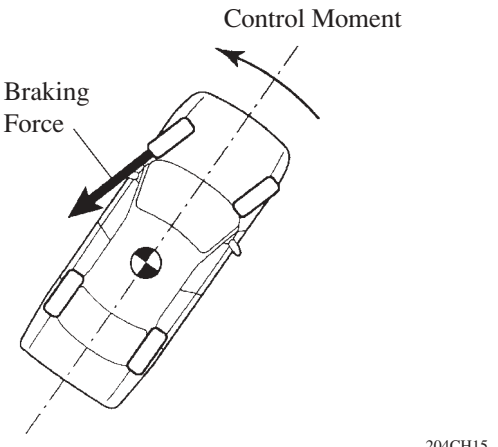

Making a Right Turn

Braking Control Under the Conditions in Which the Tires Do Not Exceed the Lateral Limitations of the Vehicle

1) During Cornering Braking

The VSC system determines the cornering conditions of the vehicle in accordance with the signals provided by the yaw rate & deceleration sensor, and the speed sensor. It determines the extent of the brake pedal application by the driver in accordance with the signals provided by the master cylinder pressure sensor.
When the vehicle is braking while cornering, the brake actuator increases the brake fluid pressure to the front outer wheel of the turn, and simultaneously controls the brake fluid pressure to the inner wheel of the turn. This generates a moment of inertia that inhibits the vehicle from veering further inward of the turn. As a result, this system provides the excellent vehicle stability and braking performance.

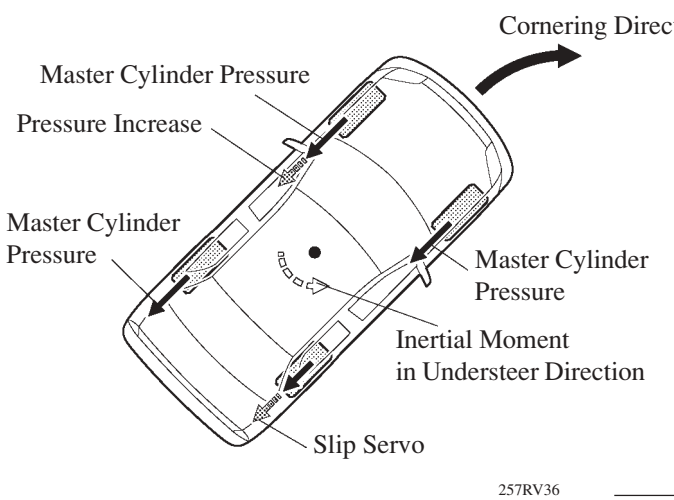

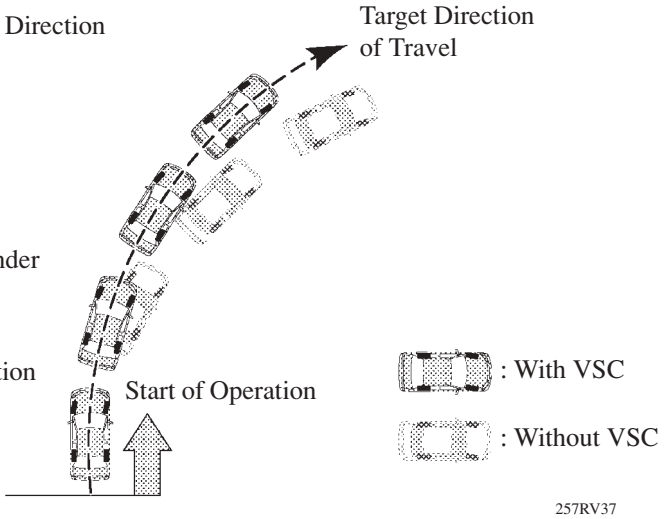

2) During High-Speed Straightline Braking

The VSC system determines the extent of the brake pedal application by the driver in accordance with the signals provided by the master cylinder pressure sensor and the high-speed driving conditions in accordance with the signals provided by the speed sensor.
When the fluid pressure in the master cylinder reaches a predetermined value while the vehicle is braking at a predetermined speed or higher, the system controls the brake fluid pressure applied to the rear wheels as a result of the driver's further application of the brake pedal. This helps suppress the slippage of the rear tires and provides the excellent stability of the vehicle.
To compensate for the reduction in the braking force due to the suppression of the fluid pressure to the rear brakes, the brake actuator increases the fluid pressure to the front wheel brakes, in order to provide the proper braking force required by the driver.

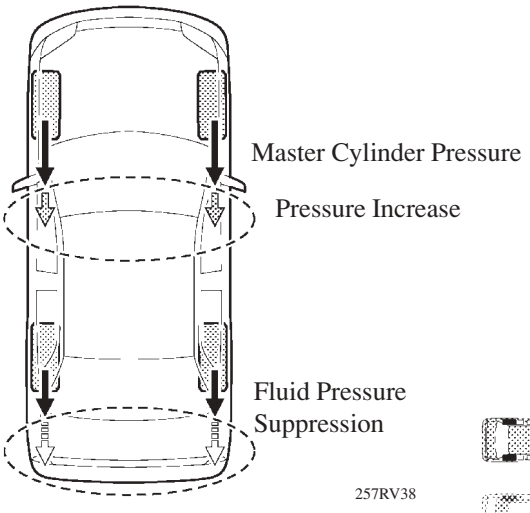

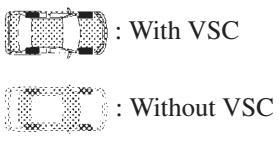

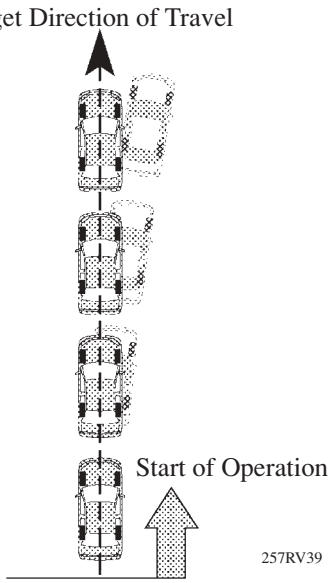

Layout of Main Components

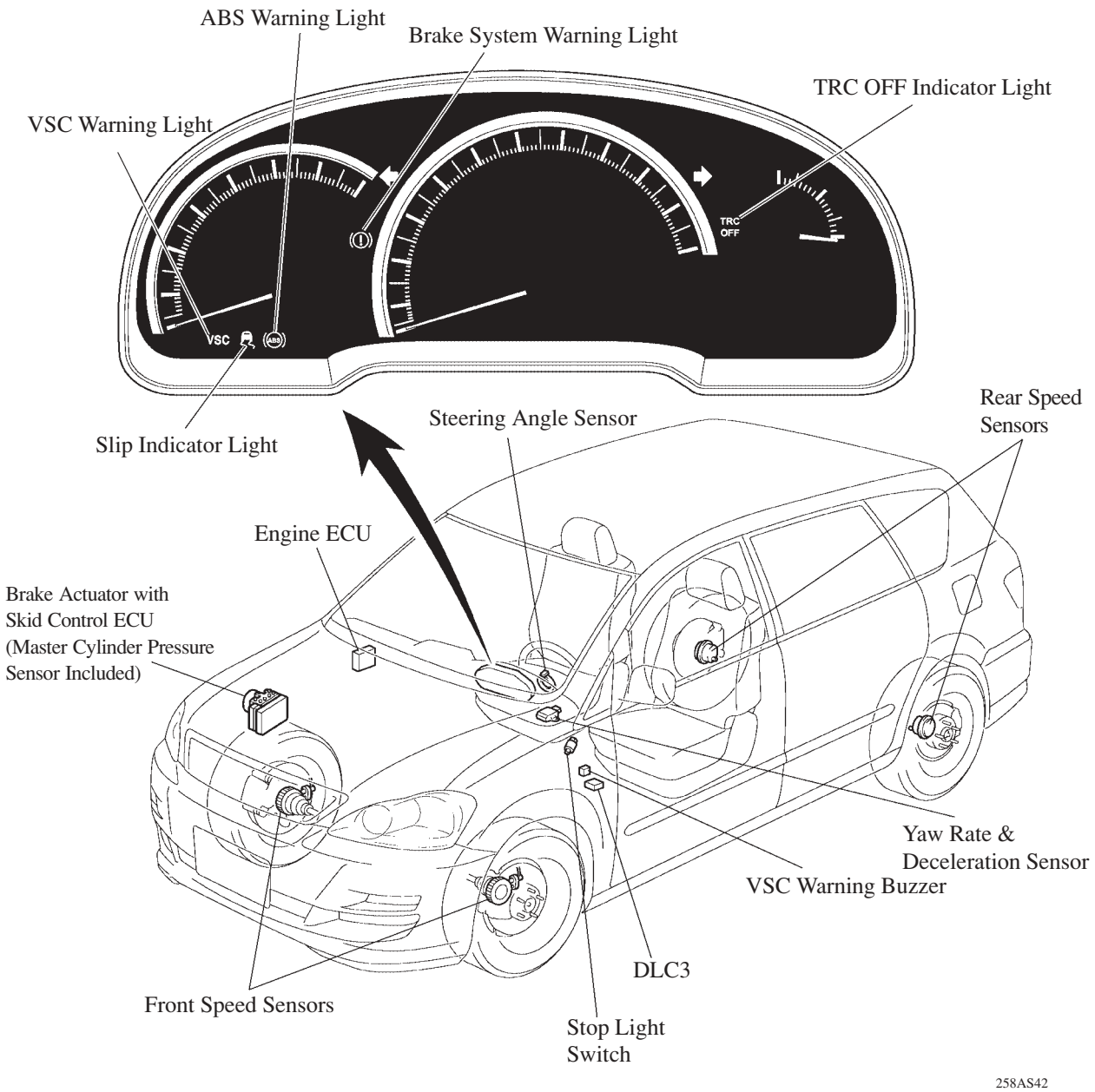

Function of Main Components

Components		Function
Brake Actuator		Changes the fluid path based on the signals from the skid control ECU during the operation of the ABS with EBD & Brake Assist & TRC & VSC system, in order to control the fluid pressure that is applied to the wheel cylinders.
	Skid Control ECU	Judges the vehicle driving condition based on signals from each sensor, and sends brake control signals to the brake actuator.
	Master Cylinder Pressure sensor	Assembled in the brake actuator and detects the master cylinder pressure.
Combination Meter	Brake System Warning Light	● Lights up to alert the driver when a malfunction occurs in the brake system. ● Lights up to alert the driver when the skid control ECU detects a malfunction in the EBD control. ● Light up to inform the driver when the parking brake pedal depressed. ● Light up to alert the driver when the brake fluid level decreased.
	ABS Warning Light	Lights up to alert the driver when the skid control ECU detects a malfunction in the ABS, EBD, or Brake Assist system.
	VSC Warning Light	Lights up to alert the driver when the skid control ECU detects a malfunction in the TRC and VSC.
	TRC OFF Indicator Light	● Lights up to inform the driver when the TRC system is turned OFF by the TRC OFF switch. ● Lights up to alert the driver when the skid control ECU detects a malfunction in the TRC or VSC.
	Slip Indicator Light	Blinks to inform the driver when the TRC and VSC is operated.
Speed Sensor (FL, FR, RL, RR)		Detects the wheel speed of each wheels.
Steering Angle Sensor		Detects the steering direction and angle of the steering wheel.
Yaw Rate & Deceleration Sensor		● Detects the vehicle's yaw rate. ● Detects the vehicle's longitudinal and lateral acceleration.
Stop Light Switch		Detects the brake pedal depressing signal.
TRC OFF Switch		Cancels the TRC operation only: it does not apply to other systems.
VSC Warning Buzzer		This buzzer sounds intermittently to inform the driver that the VSC is actives.
Engine ECU		Controls the throttle valve opening angle based on the signals receives from the skid control ECU, in order to control the engine output. Also, sends the throttle valve opening angle signal, accelerator pedal position signal, and engine speed signal to the skid control ECU.
Throttle Position Sensor		● Detects the opening of the throttle valve and inputs it into the engine ECU. ● This sensor is used to control the engine output when the TRC or VSC is operated.
Accelerator Pedal Position Sensor		● Detects the depressing of the accelerator pedal and inputs it into the engine ECU. ● This sensor is used to control the engine output when the TRC or VSC is operated.
Crankshaft Position Sensor		● Detects the engine speed, and sends it via the engine ECU to the skid control ECU. ● This sensor is used to control the engine output when the TRC or VSC is operated.
Throttle Control Motor		Controls the opening of the throttle valve in accordance with the signals received from the engine ECU.

Construction

1) Brake Actuator

a. General

- The brake actuator consists of 10 two-position solenoid valves, 2 pressure regulator valves, 1 pump motor, 2 trochoid gear type pump, 2 reservoirs, and master cylinder pressure sensor.
  The 10 two-position solenoid valves consist of the following:

– 2 master cylinder cut solenoid valves (linear type) [(1), (2)]
– 4 pressure holding solenoid valves [(3), (4), (5), (6)]
– 4 pressure reduction solenoid valves [(7), (8), (9), (10)]

▶ Hydraulic Circuit ◀

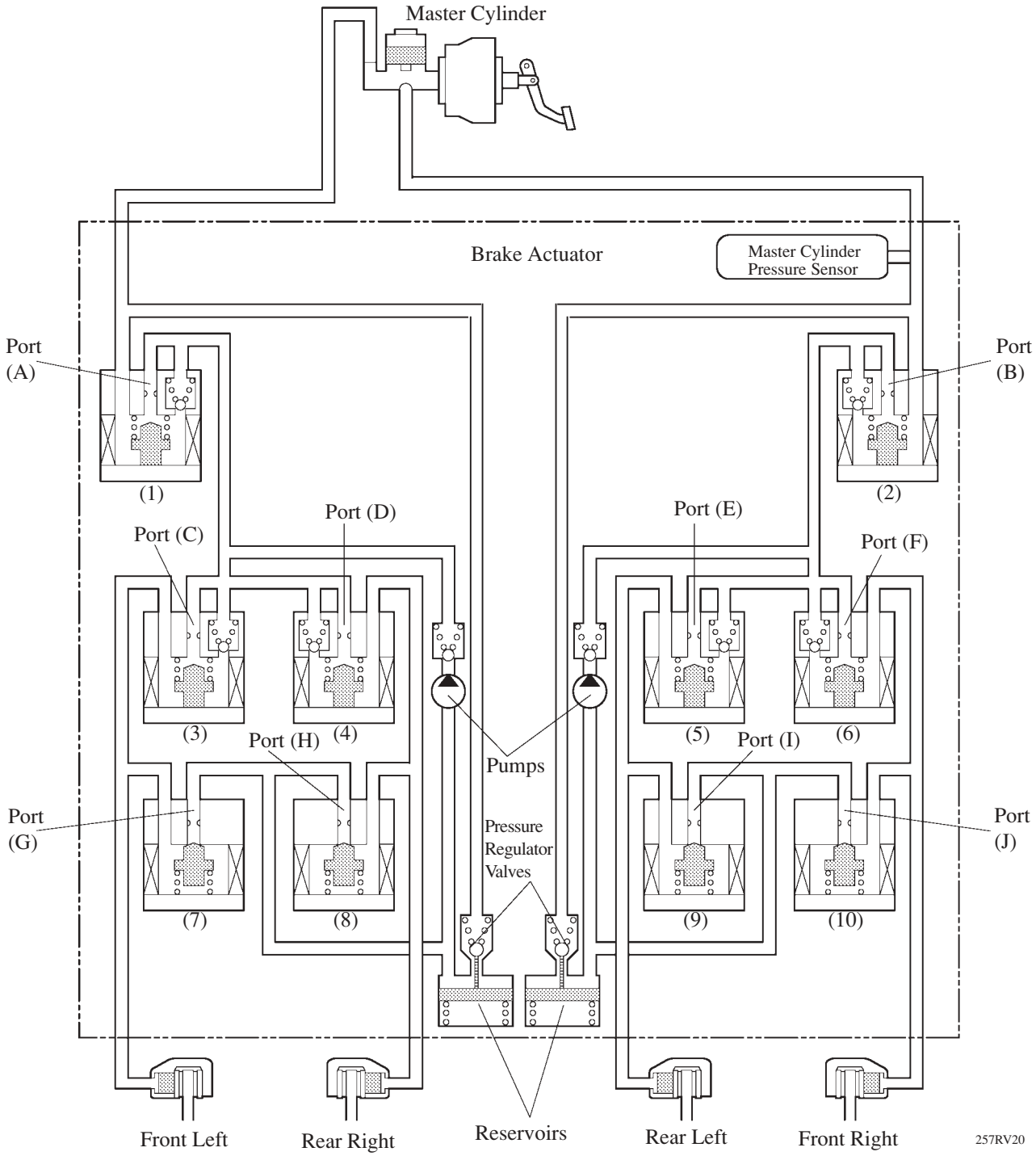

▶ Function of Main Components ◀

Component		Function
(1), (2)	Master Cylinder Cut Solenoid Valve (Linear Type)	To effect the respective brake controls of the brake assist, TRC, and VSC system, a combination of the ON/OFF conditions of the master cylinder cut solenoid valve is used to appropriately vary the fluid pressure.
(3), (4), (5), (6)	Pressure Holding Valve	Each wheel cylinder contains a pressure holding solenoid valve and a pressure reduction solenoid valve. A combination of the ON/OFF conditions of the respective valves is used in order to change the increase mode, holding mode, or the reduction mode during the operation of the ABS, TRC, and VSC system.
(7), (8), (9), (10)	Pressure Reduction Valve	
Master Cylinder Pressure Sensor		The master cylinder pressure sensor converts the brake fluid pressure that the master cylinder applies to the brake actuator into an electrical signal and sends it to the skid control ECU. The skid control ECU can thus monitor the brake fluid pressure that is applied to the brake actuator in accordance with this signal.
Reservoir		While effecting the reduction mode during the operation of the ABS, TRC, and VSC system, the reservoir stores the brake fluid that has returned from the wheel cylinders. It also functions as an accumulator.
Pump		Pumps the brake fluid that is stored in the reservoir and returns it to the master cylinder. While effecting the increase mode during the operating of the brake assist, TRC and VSC system, the pump operates in order to apply brake fluid pressure to the wheel cylinders.
Pressure Regulator Valve		Regulates the pressure of the fluid supplied to the pump, and closes the pressure passage between the master cylinder and the pump when the brake pedal is depressed.

b. Pump and Reservoir

- The trochoid gear type pump has been newly adopted to reduce operating noise.

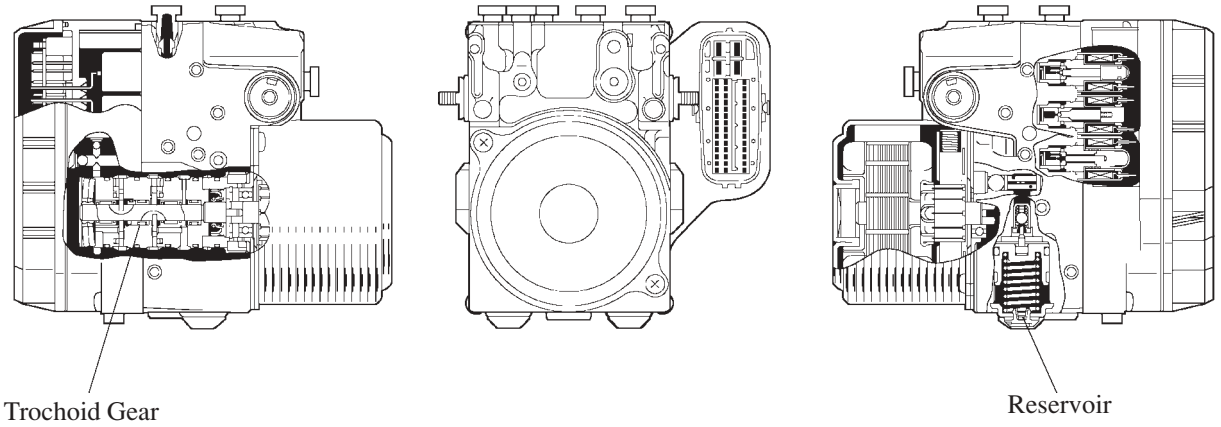

241CH59

- The pressure regulator valve has been adopted in the reservoir for the purpose of regulating the pressure of the fluid to be supplied to the pump and to close the passage between the pump and the master cylinder during braking.

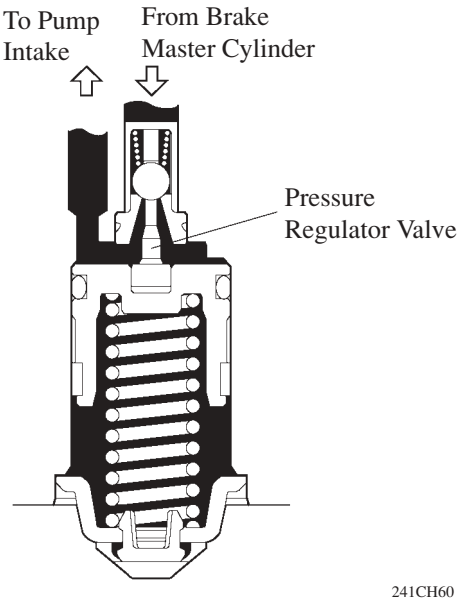

241CH60

Reservoir Cross Section

Brake Assist Operation

In the event of emergency braking, the skid control ECU detects the driver's intention based on the speed of the pressure increase in the master cylinder determined by the pressure sensor signal. If the ECU judges the need for the additional brake assist, the fluid pressure is generated by the pump in the actuator and directed to the wheel cylinder to apply a greater fluid pressure than the master cylinder.

▶ System Diagram ◀

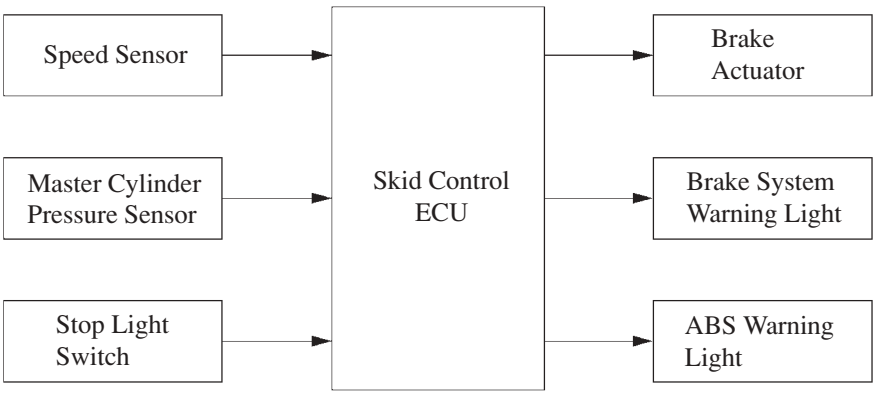

258AS53

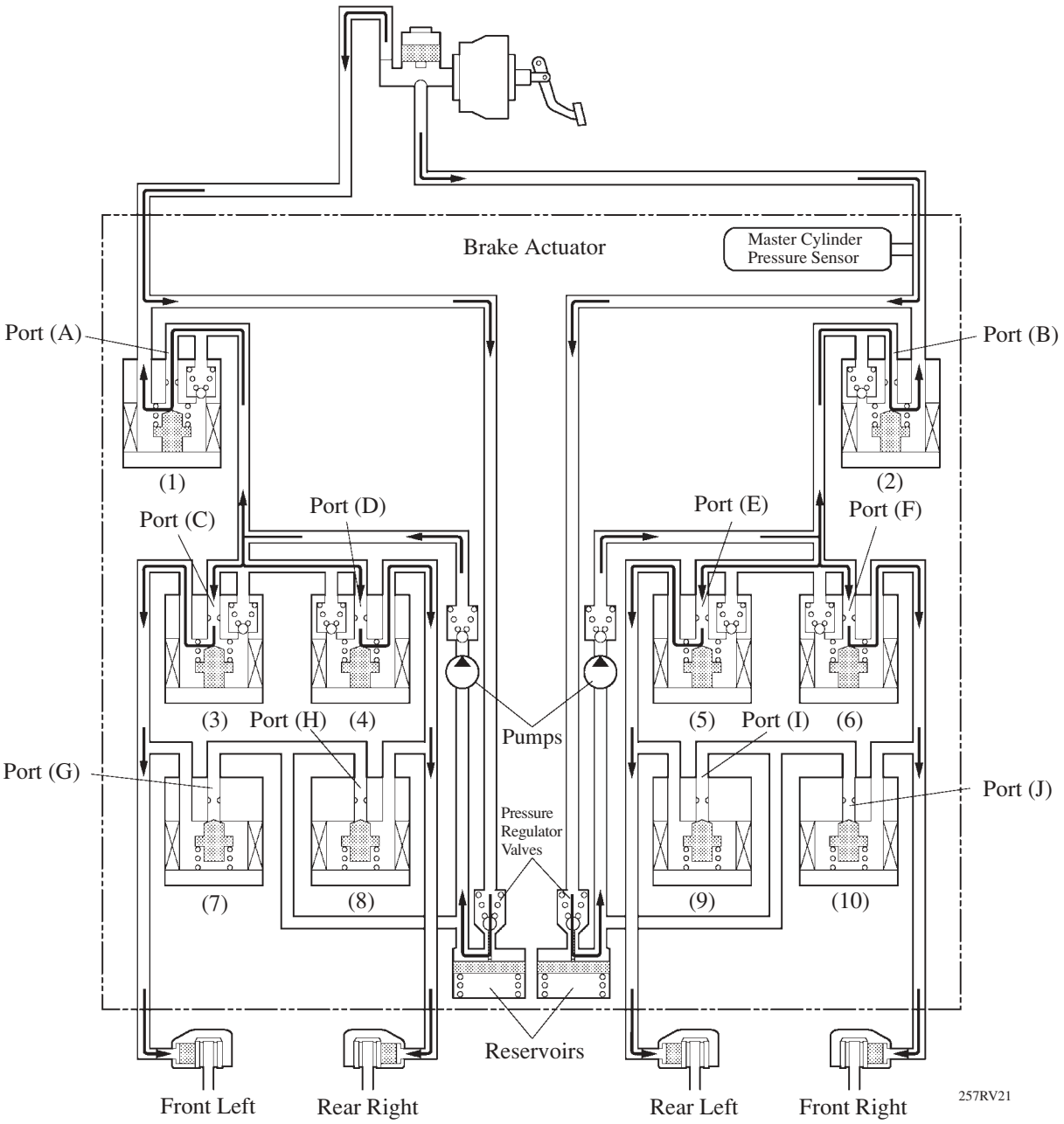

Brake Assist Activated

Item		Brake Assist Not Activated	Brake Assist Activated
(1), (2)	Master Cylinder Cut Solenoid Valve	OFF (Open)	ON*
	Port: (A), (B)		
(3), (4), (5), (6)	Pressure Holding Solenoid Valve	OFF (Open)	OFF (Open)
	Port: (C), (D), (E), (F)		
(7), (8), (9), (10)	Pressure Reduction Solenoid Valve	OFF (Close)	OFF (Close)
	Port: (G), (H), (I), (J)		

*: The solenoid valve controls the hydraulic pressure between "open" and "close" according to the operating condition by adjusting continually.

TRC Operation

The fluid pressure generated by the pump is regulated by the master cylinder cut solenoid valve to the required pressure. Thus, the wheel cylinders of the drive wheels are controlled in the following 3 modes: pressure reduction, pressure holding, and pressure increase modes, to control the slippage of the drive wheels.

The diagram below shows the hydraulic circuit in the pressure increase mode when the TRC system is activated.

The pressure holding solenoid valve and the pressure reduction solenoid valve are turned ON/OFF according to the ABS operation pattern described on the previous page.

▶ System Diagram ◀

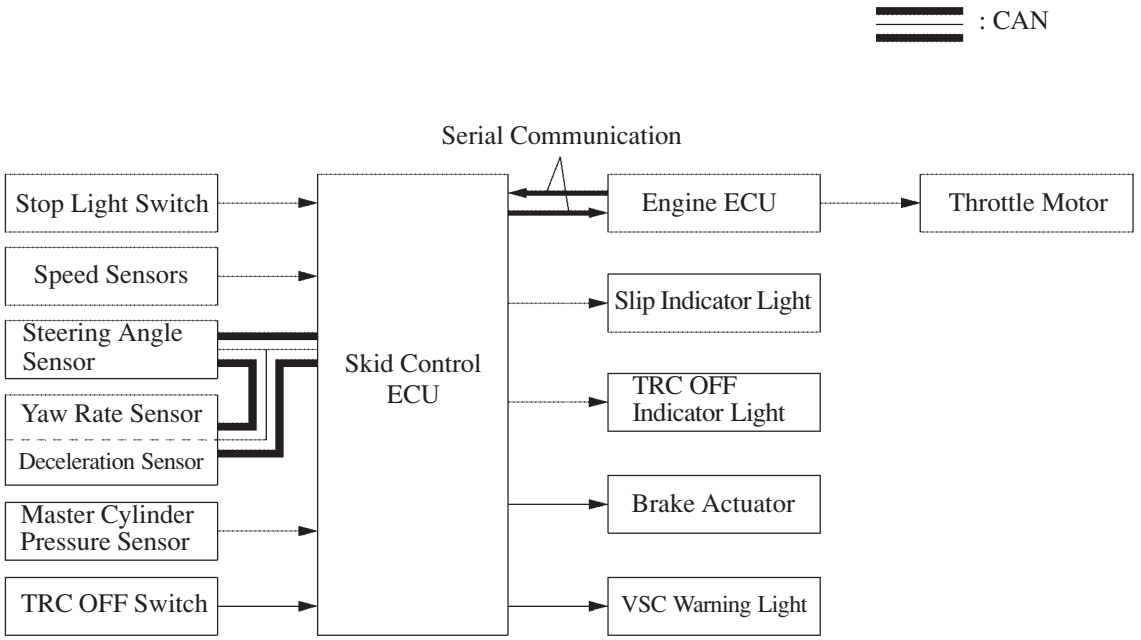

257RV22

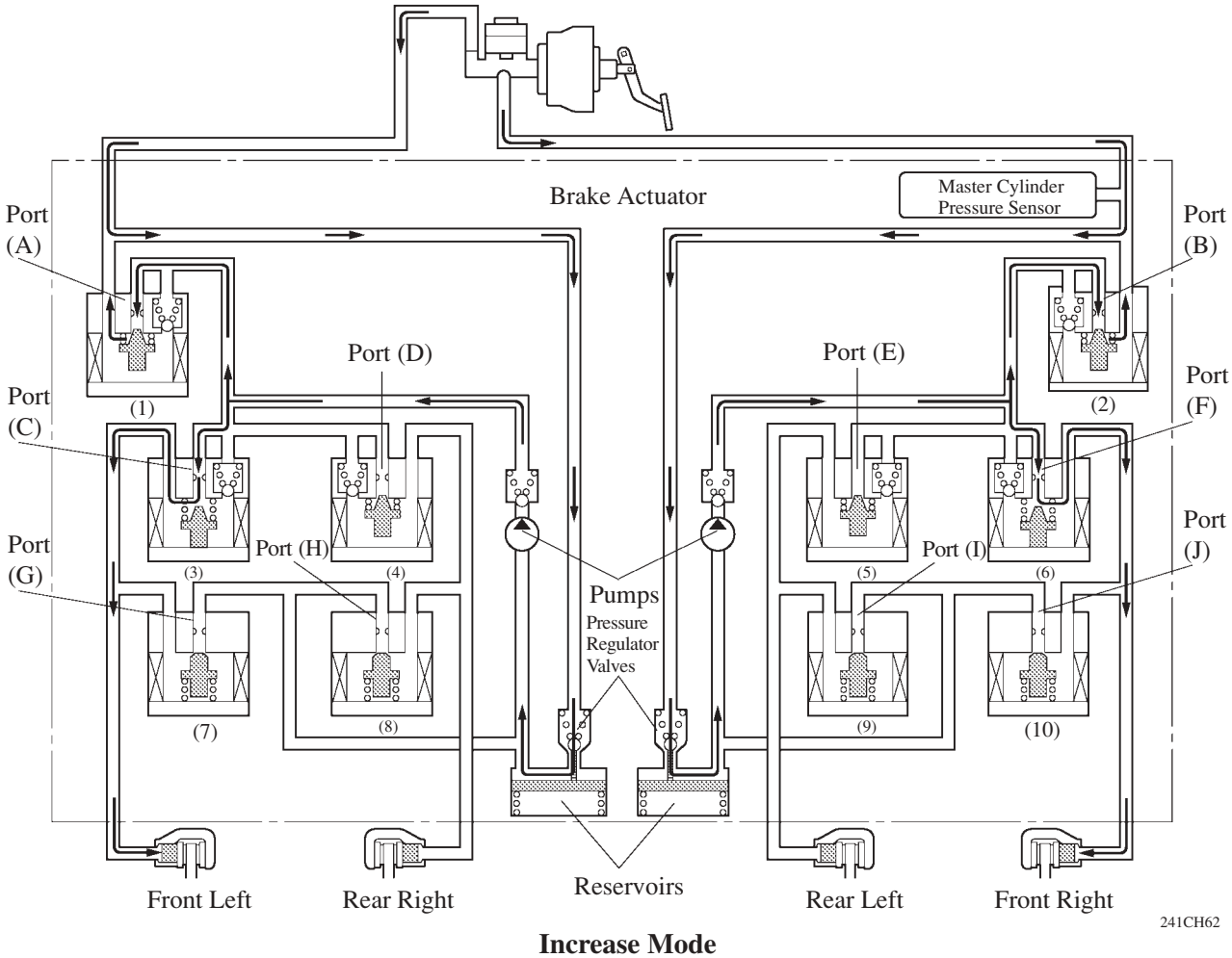

Increase Mode

Item			TRC not Activated	TRC Activated		
				Increase Mode	Holding Mode	Reduction Mode
(1), (2)	Master Cylinder Cut Solenoid Valve		OFF (Open)	ON*	ON*	ON*
	Port: (A), (B)					
Front Brake	(3), (6)	Pressure Holding Valve	OFF (Open)	OFF (Open)	ON (Close)	ON (Close)
		Port: (C), (F)				
	(7), (10)	Pressure Reduction Valve	OFF (Close)	OFF (Close)	OFF (Close)	ON (Open)
		Port: (G), (J)				
	Wheel Cylinder Pressure		—	Increase	Holding	Reduce
Rear Brake	(4), (5)	Pressure Holding Valve	OFF (Open)	ON (Close)	ON (Close)	ON (Close)
		Port: (D), (E)				
	(8), (9)	Pressure Reduction Valve	OFF (Close)	OFF (Close)	OFF (Close)	OFF (Close)
		Port: (H), (I)				
	Wheel Cylinder Pressure		—	—	—	—

*: The solenoid valve controls the hydraulic pressure between "open" and "close" according to the operating condition by adjusting continually.

4

VSC Operation

1) General

The VSC system, by way of solenoid valves, controls the fluid pressure that is generated by the pump and applies it to the brake wheel cylinder of each wheel in the following 3 modes: pressure reduction, pressure holding, and pressure increase modes. As a result, the tendency to front wheel skid or rear wheel skid is controlled.

▶ System Diagram ◀

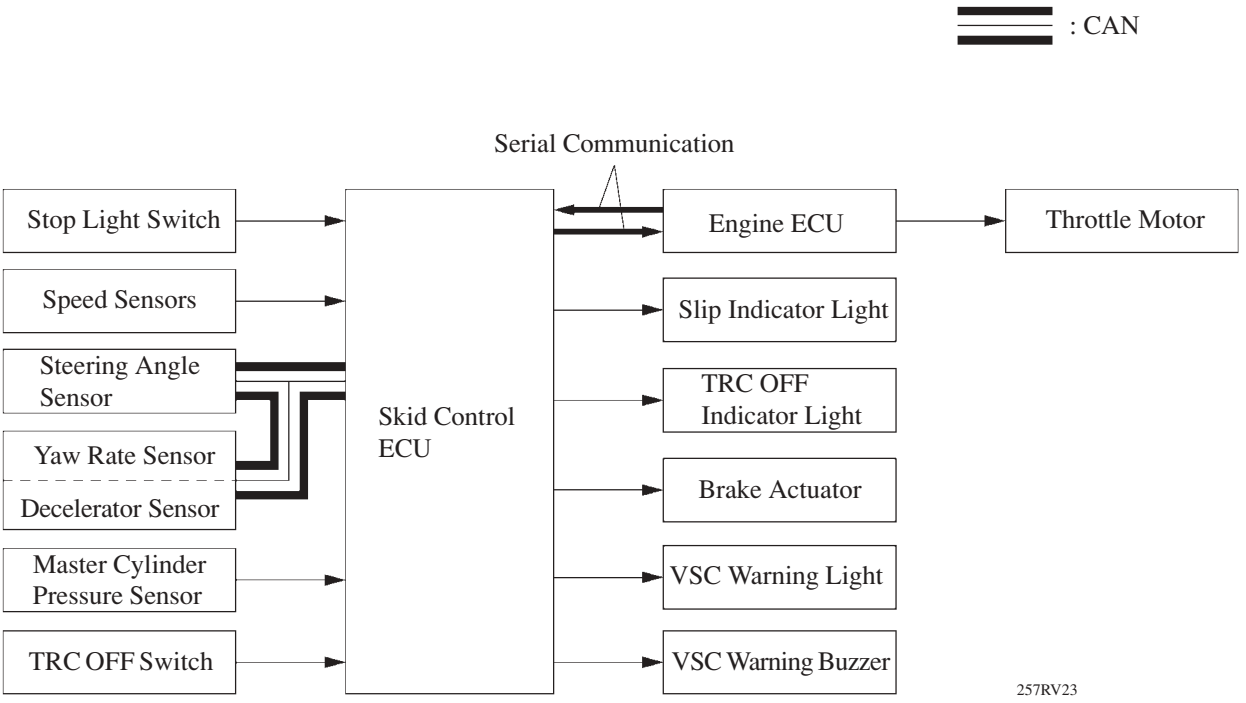

2) Front Wheel Skid Control (Turn to the Right)

In the front wheel skid control, the brakes of the front wheels and the rear wheel of the inner circle of the turn are applied.

Also, depending on whether the brake is ON or OFF and the condition of the vehicle, there are circumstances in which the brake might not be applied to the wheels even if those wheels are targeted for braking.

The diagram below shows the hydraulic circuit in the pressure increase mode, as it controls the front wheel skid condition while the vehicle makes a right turn.

The pressure holding solenoid valve and the pressure reduction solenoid valve are turned ON/OFF according to the ABS operation pattern.

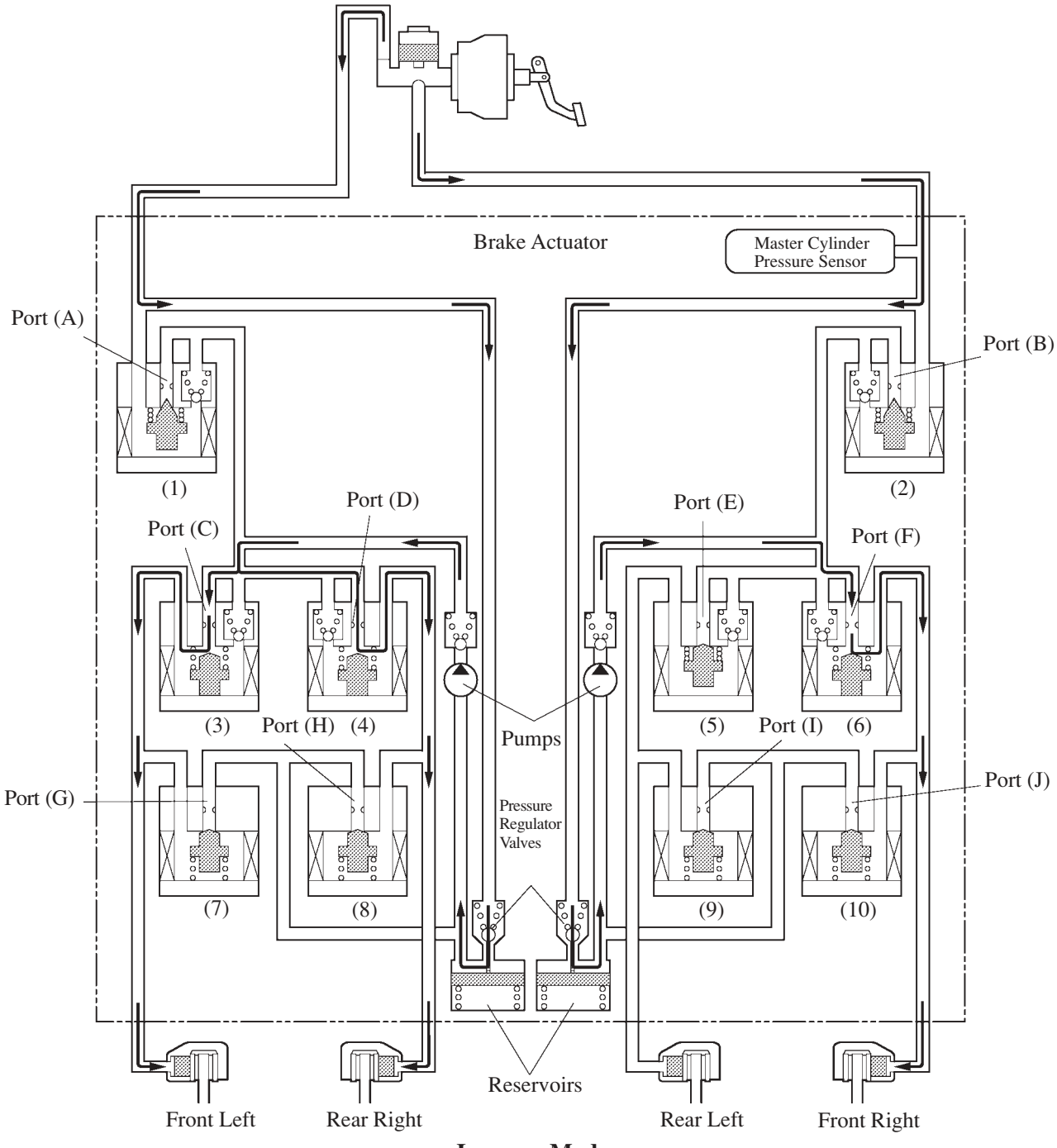

Increase Mode

258AS54

Item			VSC not Activated	VSC Activated		
				Increase Mode	Holding Mode	Reduction Mode
(1), (2)	Master Cylinder Cut Solenoid Valve Port: (A), (B)		OFF (Open)	ON	ON	ON
Front Brake	(3)	Pressure Holding Solenoid Valve Port: (C)	OFF (Open)	OFF (Open)	ON (Close)	ON (Close)
	(6)	Pressure Holding Solenoid Valve Port: (F)	OFF (Open)	OFF (Open)	ON (Close)	ON (Close)
	(7)	Pressure Reduction Solenoid Valve Port: (G)	OFF (Close)	OFF (Close)	OFF (Close)	ON (Open)
	(10)	Pressure Reduction Solenoid Valve Port: (J)	OFF (Close)	OFF (Close)	OFF (Close)	ON (Open)
	Wheel Cylinder Pressure	Right	—	Increase	Holding	Reduce
		Left	—	Increase	Holding	Reduce
Rear Brake	(4)	Pressure Holding Solenoid Valve Port: (D)	OFF (Open)	OFF (Open)	ON (Close)	ON (Close)
	(5)	Pressure Holding Solenoid Valve Port: (E)	OFF (Open)	ON (Close)	ON (Close)	ON (Close)
	(8)	Pressure Reduction Solenoid Valve Port: (H)	OFF (Close)	OFF (Close)	OFF (Close)	ON (Open)
	(9)	Pressure Reduction Solenoid Valve Port: (I)	OFF (Close)	OFF (Close)	OFF (Close)	OFF (Close)
	Wheel Cylinder Pressure	Right	—	Increase	Holding	Reduce
		Left	—	—	—	—

3) Rear Wheel Skid Control (Turn to the Right)

In rear wheel skid control, the brake of the front wheel of the outer circle of the turn is applied. As an example, the diagram below shows the hydraulic circuit in the pressure increase mode, as it controls the rear wheel skid condition while the vehicle make a right turn.

As in front wheel skid control the pressure holding solenoid valve and the pressure reduction solenoid valve are turned ON/OFF according to the ABS operating pattern.

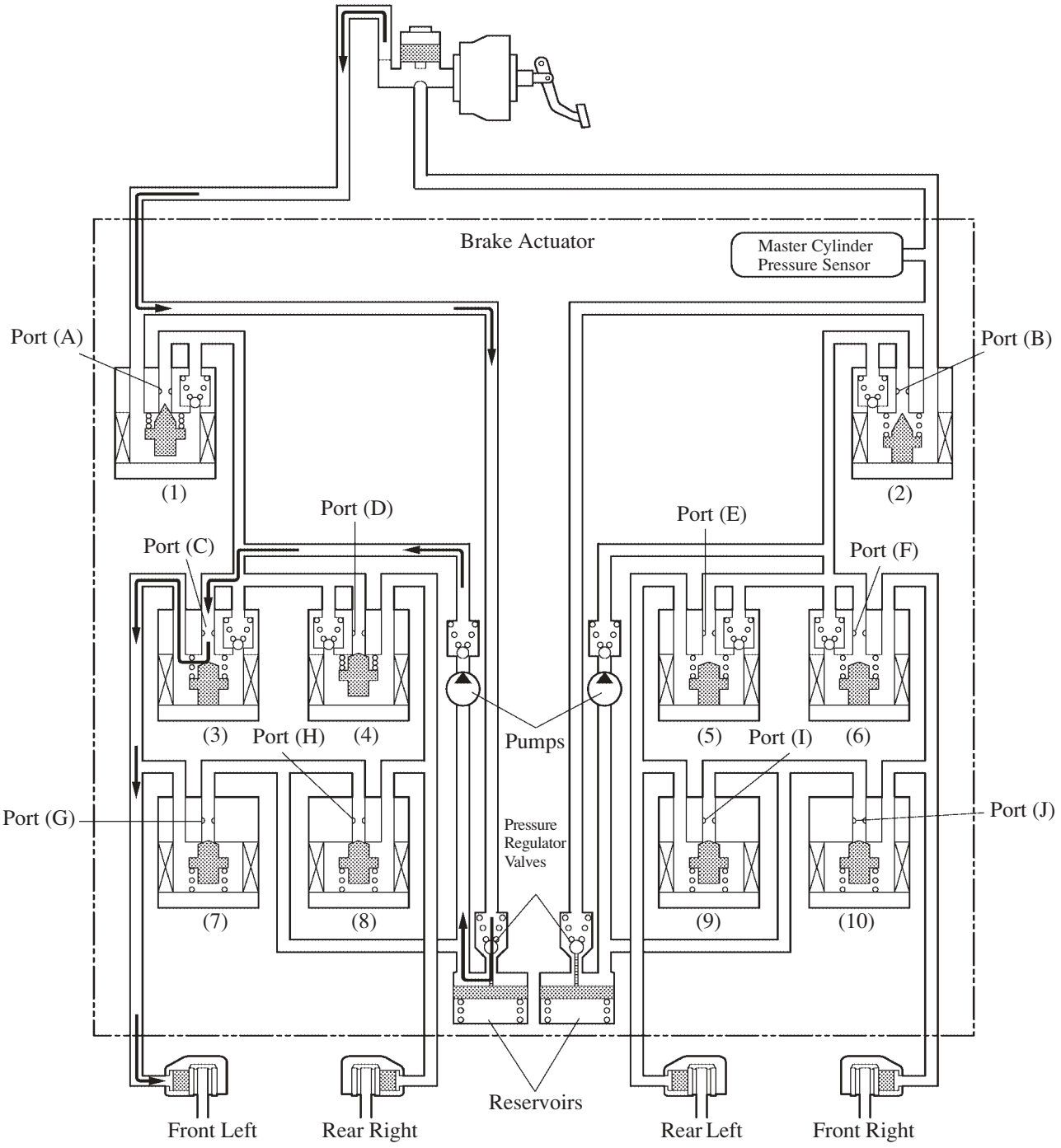

Increase Mode

258AS55

Item			VSC not Activated	VSC Activated		
				Increase Mode	Holding Mode	Reduction Mode
(1)	Master Cylinder Cut Solenoid Valve		OFF (Open)	ON (Close)	ON (Close)	ON (Close)
	Port: (A)					
(2)	Master Cylinder Cut Solenoid Valve		OFF (Open)	OFF (Open)	OFF (Open)	OFF (Open)
	Port: (B)					
Front Brake	(3)	Pressure Holding Solenoid Valve	OFF (Open)	OFF (Open)	ON (Close)	ON (Close)
		Port: (C)				
	(6)	Pressure Holding Solenoid Valve	OFF (Open)	OFF (Open)	OFF (Open)	OFF (Open)
		Port: (F)				
	(7)	Pressure Reduction Solenoid Valve	OFF (Close)	OFF (Close)	OFF (Close)	ON (Open)
		Port: (G)				
	(10)	Pressure Reduction Solenoid Valve	OFF (Close)	OFF (Close)	OFF (Close)	OFF (Close)
		Port: (J)				
	Wheel Cylinder Pressure	Right	—	—	—	—
		Left	—	Increase	Holding	Reduce
Rear Brake	(4)	Pressure Holding Solenoid Valve	OFF (Open)	ON (Close)	ON (Close)	ON (Close)
		Port: (D)				
	(5)	Pressure Holding Solenoid Valve	OFF (Open)	ON (Close)	ON (Close)	ON (Close)
		Port: (E)				
	(8)	Pressure Reduction Solenoid Valve	OFF (Close)	OFF (Close)	OFF (Close)	OFF (Close)
		Port: (H)				
	(9)	Pressure Reduction Solenoid Valve	OFF (Close)	OFF (Close)	OFF (Close)	OFF (Close)
		Port: (I)				
	Wheel Cylinder Pressure	Right	—	—	—	—
		Left	—	—	—	—

4) Control During Cornering Braking (Turn to the Right)

During cornering braking, the pressure holding valve (3), and the pressure reduction valve (7) are inactive. However, because the pump is operating, the brake fluid pressure in the left front wheel cylinder increases. At the same time, the pressure holding valve (4) and the pressure reduction valve (8) turn ON and OFF in the pressure increase, pressure holding, and pressure reduction modes, in order to control the brake fluid pressure applied to the right rear wheel cylinder.

The master cylinder cut solenoid valve (2) regulates the master cylinder fluid pressure applied to the right front wheel cylinder and the left rear wheel cylinder. Because the pressure holding valves (5) and (6) and the pressure reduction valves (9) and (10) are inactive at this time, the master cylinder fluid pressure acts on the right front wheel cylinder and the left rear wheel cylinder.

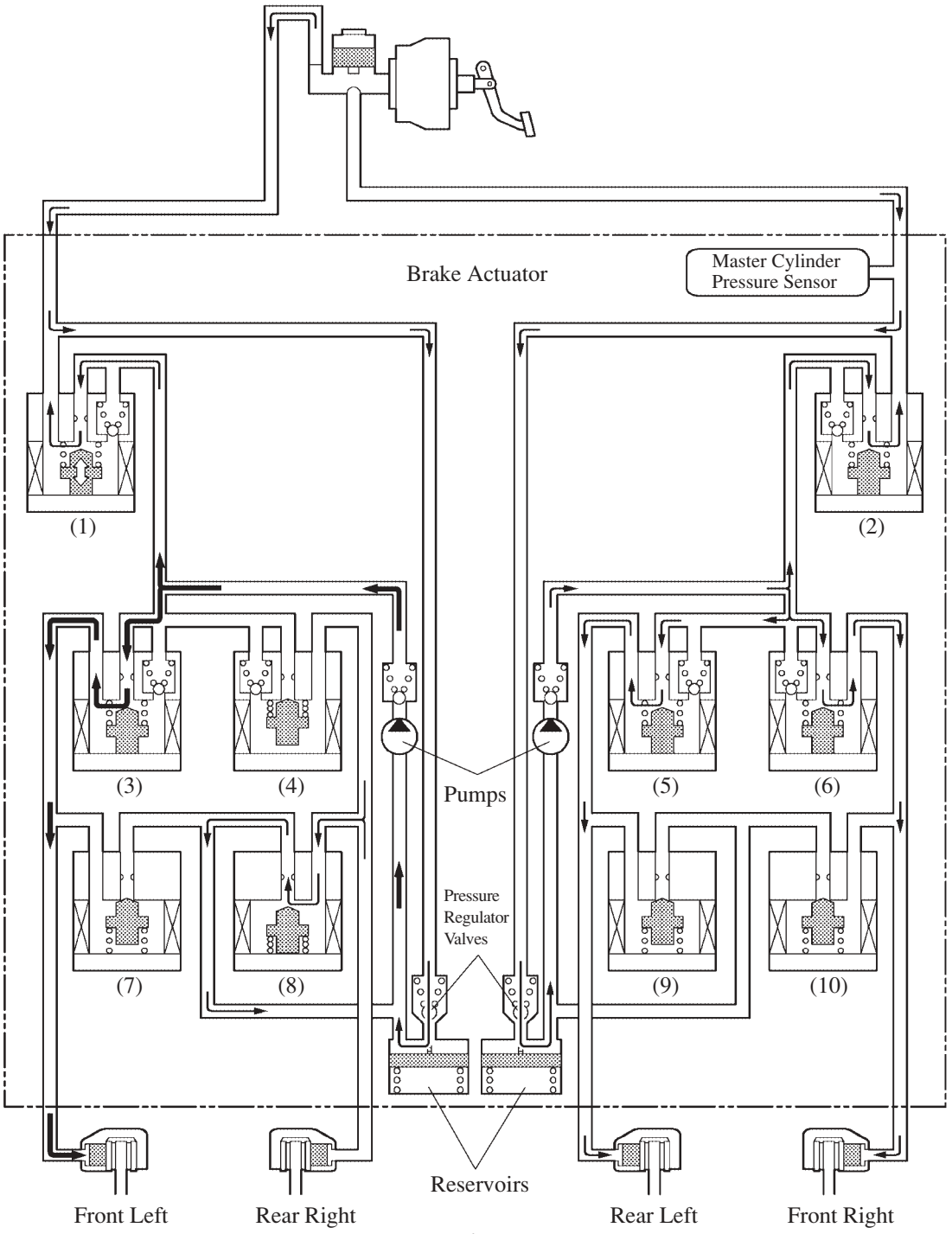

Reduction Mode

258AS56

Item			VSC Activated		
			Increase Mode	Holding Mode	Reduction Mode
(1)	Master Cylinder Cut Solenoid Valve		ON*1	ON*1	ON*1
(2)	Master Cylinder Cut Solenoid Valve		—*2	—*2	—*2
Front Brake	(3)	Pressure Holding Solenoid Valve	—*2	—	—
	(6)	Pressure Holding Solenoid Valve	—*2	—	—
	(7)	Pressure Reduction Solenoid Valve	—*2	—	—
	(10)	Pressure Reduction Solenoid Valve	—*2	—	—
	Wheel Cylinder Pressure	Right	—*3	—	—
		Left	Increase	—	—
Rear Brake	(4)	Pressure Holding Solenoid Valve	OFF (Open)	ON (Close)	ON (Close)
	(5)	Pressure Holding Solenoid Valve	—*1	—*1	—*1
	(8)	Pressure Reduction Solenoid Valve	OFF (Close)	OFF (Close)	ON (Open)
	(9)	Pressure Reduction Solenoid Valve	—*1	—*1	—*1
	Wheel Cylinder Pressure	Right	Increase	Holding	Reduce
		Left	—*3	—*3	—*3

*1: The solenoid valve controls the hydraulic pressure between “open” and “close” according to the operating condition by adjusting continually.

*2: Indicates an inactive condition.

*3: The master cylinder pressure acts on it.

5) Control During High-Speed

During high-speed braking, the system turns ON/OFF (pressurization/depressurization) the pressure holding valves (4) and (5), and the pressure reduction valves (8) and (9) depend on the vehicle condition. Because the pressure holding valves (3) and (6) and the pressure reduction valves (7) and (10) are inactive (the pressure holding valves are ON and the pressure reduction valves are OFF) at this time, the pump increases the fluid pressure of braking force, which is corresponded to the fluid pressure reduced at the rear wheel cylinders, in the front wheel cylinder.

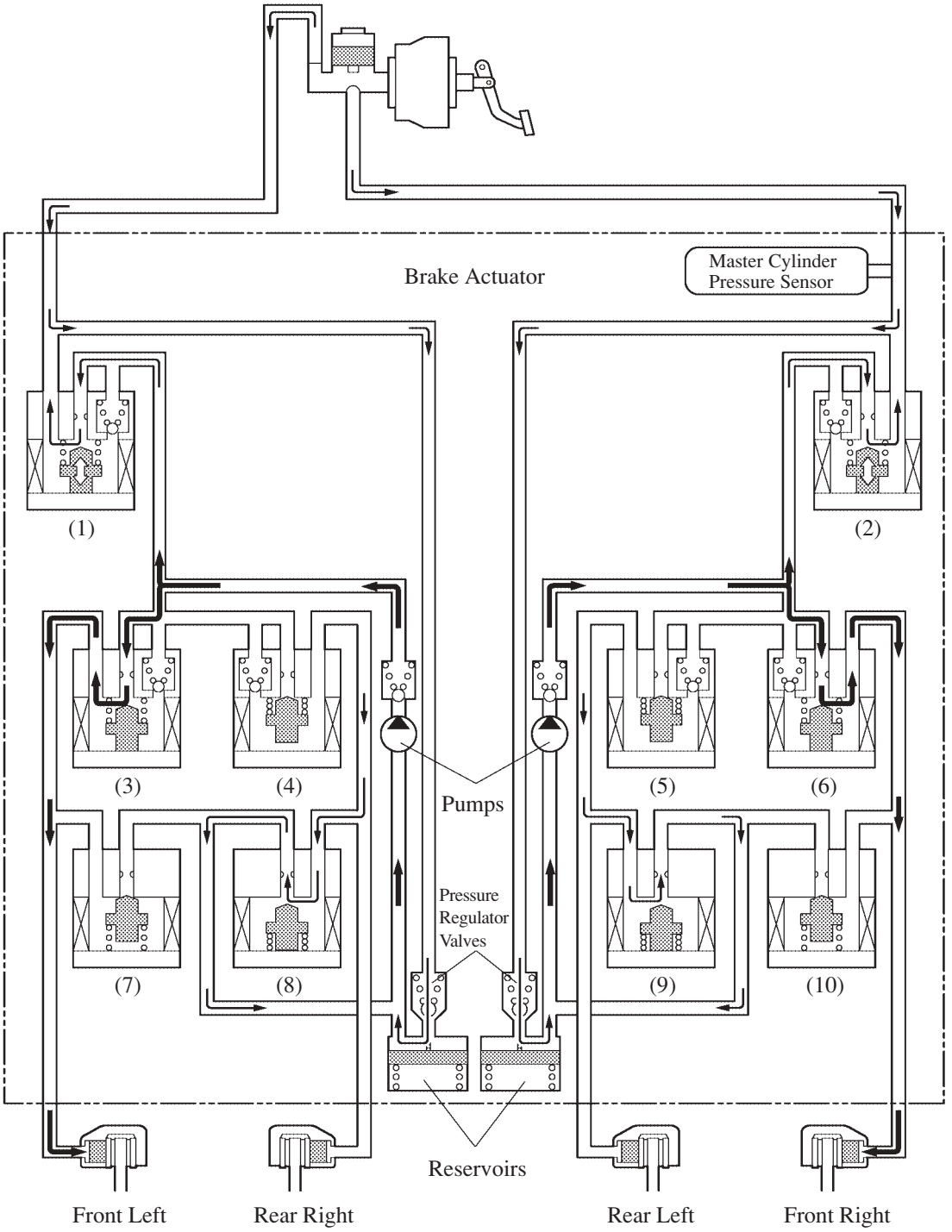

Reduction Mode

257RV43

Item			VSC Activated		
			Increase Mode	Holding Mode	Reduction Mode
(1)	Master Cylinder Cut Solenoid Valve		ON*1	ON*1	ON*1
(2)	Master Cylinder Cut Solenoid Valve		ON*1	ON*1	ON*1
Front Brake	(3)	Pressure Holding Solenoid Valve	—*2	—	—
	(6)	Pressure Holding Solenoid Valve	—*2	—	—
	(7)	Pressure Reduction Solenoid Valve	—*2	—	—
	(10)	Pressure Reduction Solenoid Valve	—*2	—	—
	Wheel Cylinder Pressure	Right	Increase	—	—
		Left	Increase	—	—
Rear Brake	(4)	Pressure Holding Solenoid Valve	OFF (Open)	ON (Close)	ON (Close)
	(5)	Pressure Holding Solenoid Valve	OFF (Open)	ON (Close)	ON (Close)
	(8)	Pressure Reduction Solenoid Valve	OFF (Close)	OFF (Close)	ON (Open)
	(9)	Pressure Reduction Solenoid Valve	OFF (Close)	OFF (Close)	ON (Open)
	Wheel Cylinder Pressure	Right	Increase	Holding	Reduce
		Left	Increase	Holding	Reduce

*1: The solenoid valve controls the hydraulic pressure between "open" and "close" according to the operating condition by adjusting continually.

*2: Indicates an inactive condition.

3. Skid Control ECU

VSC

Based on the 4 different sensor signals received from the speed sensors, yaw rate & deceleration sensors and steering angle sensor, the skid control ECU calculates the vehicle condition.
If a strong front wheel skid or rear wheel skid tendency is created during an emergency avoidance maneuver or cornering, and the skid control ECU determines that the amount of vehicle condition exceeds a prescribed value, it controls the engine torque through throttle and the brake fluid pressure according to the amount of needed to control the vehicle.

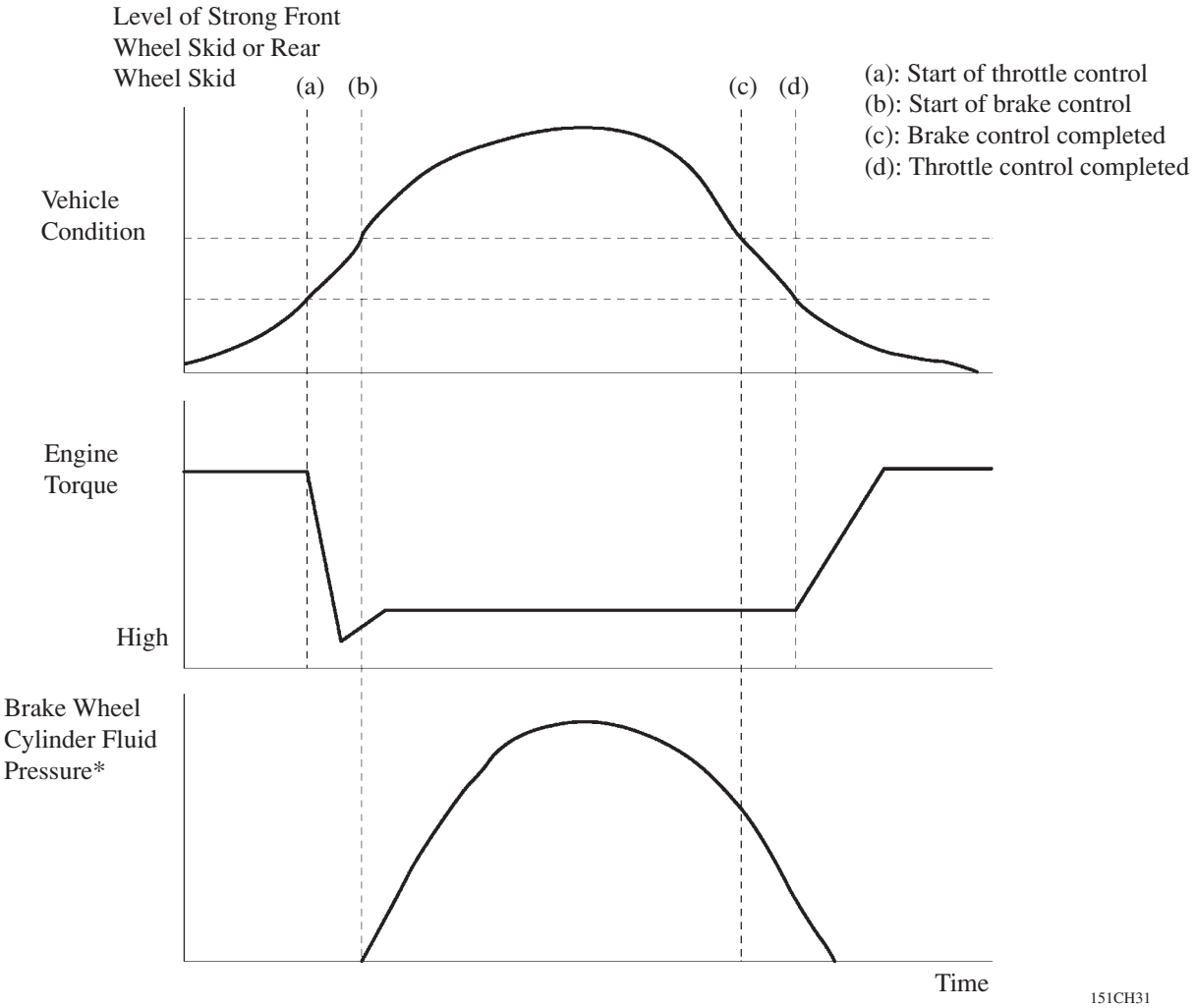

*: The wheel cylinder that activates varies depending on the condition of the vehicle.

Initial Check

Each time the ignition switch is turned ON, and the vehicle reaches approximately speed of 6 km/h (4 mph) or more, the skid control ECU performs the initial check.
The functions of each solenoid valve and pump motor in the brake actuator are checked in order.

Self-Diagnosis

- If the skid control ECU detects a malfunction in the ABS with EBD, brake assist, TRC and VSC systems, the ABS, brake system and VSC warning lights and the TRC OFF and Slip indicator lamps that corresponds to the function in which the malfunction has been detected lights up, as indicated in the table below, to alert the driver of the malfunction.

○: Light ON —: Light OFF

Item	ABS	EBD	Brake Assist	TRC	VSC
ABS Warning Light	○	○	○	—	—
Brake System Warning Light	—	○	—	—	—
VSC Warning Light	—	—	—	○	○
TRC OFF Indicator Lamp	○	○	○	○	○
Slip Indicator Lamp	—	—	—	—	—

- At the same time, the DTC (Diagnostic Trouble Code) are stored in memory. The DTC can be read by connecting the SST (09843-18040) between the Tc and CG terminals DLC3, and observing the blinking of the ABS and VSC warning light (2-digit code), or by connecting a hand-held tester (5-digit code).
- This system has a sensor signal check (test mode) function. This function is activated by connecting the SST (09843-18040) between the Ts and CG terminals of the DLC3 or by connecting a hand-held tester. This check function performs yaw rate sensor zero point calibration, deceleration sensor zero point calibration, yaw rate sensor check, master cylinder pressure sensor check, and speed sensor check.
- If the skid control ECU detects a malfunction during a sensor check, it stores the DTC in its memory. This DTC can be read during a sensor signal check operation by connecting the Tc and CG terminals of the DLC3 and observing the blinking of the ABS warning light and the VSC warning light, or on a hand-held tester.
- If the CAN has communication error at ECU or sensors, multiple DTCs (Diagnostic Trouble Codes) are output simultaneously to indicate the malfunction location. For detail, refer to page 254.
  For details on the DTC that are stored in skid control ECU memory and the DTC that are output through the sensor check function, see the Avensis Verso Repair Manual Supplement (Pub. No. RM1032E).

▶ DTC Chart (Blinking ABS Warning Light) ◀

DTC No.		Detection Item	DTC No.		Detection Item
2-digit	5-digit		2-digit	5-digit	
11	C0278	Open circuit in ABS SOL relay circuit	38	C1238	Foreign matter in attached on the tip of the right rear sensor
12	C0279	Short circuit in ABS SOL relay circuit	39	C1239	Foreign matter in attached on the tip of the left rear sensor
13	C0273	Open circuit in ABS MTR relay circuit	41	C1241	Low battery positive voltage
14	C0274	Short circuit in ABS MTR relay circuit	43*	C1243*	Malfunction in deceleration sensor (constant output)
21	C0226	Open or short circuit in brake actuator solenoid circuit (SFR circuit)	44*	C1244*	Malfunction in deceleration sensor
22	C0236	Open or short circuit in brake actuator solenoid circuit (SFL circuit)	45*	C1245*	Malfunction in deceleration sensor
23	C0246	Open or short circuit in brake actuator solenoid circuit (SRR circuit)	46*	C1246*	Malfunction in master cylinder pressure sensor
24	C0256	Open or short circuit in brake actuator solenoid circuit (SRL circuit)	49	C1249	Open circuit in stop light switch circuit
25*	C1225*	Open or short circuit of brake actuator solenoid circuit (SM circuit)	51	C1251	● ABS pump motor is locked ● Open circuit in pump motor circuit
31	C0200	Right front wheel speed sensor signal malfunction	91*	C1361*	Short circuit in ABS motor fail safe relay circuit
32	C0205	Left front wheel speed sensor signal malfunction	94*	U0121*	Malfunction in CAN communication
33	C0210	Right rear wheel speed sensor signal malfunction	95*	U0124*	Malfunction in CAN communication with deceleration sensor
34	C0215	Left rear wheel speed sensor signal malfunction	97*	C1381*	Malfunction in power supply voltage yaw/deceleration sensor
35	C1235	Foreign matter in attached on the tip of the right front sensor	Always ON		● Malfunction in skid control ECU ● Open circuit in ABS warning light circuit
36	C1236	Foreign matter in attached on the tip of the left front sensor			

*: Excluding the models with ABS with EBD and brake assist.

▶ DTC Chart of Sensor Check (Blinking ABS Warning Light) ◀

DTC No.		Detection Item	DTC No.		Detection Item
2-digit	5-digit		2-digit	5-digit	
71	C1271	Low output voltage of right front speed sensor	76	C1276	Abnormal change in output voltage of left front speed sensor
72	C1272	Low output voltage of left front speed sensor	77	C1277	Abnormal change in output voltage of right rear speed sensor
73	C1273	Low output voltage of right rear speed sensor	78	C1278	Abnormal change in output voltage of left rear speed sensor
74	C1274	Low output voltage of left rear speed sensor	79*	C1279*	Deceleration sensor output voltage is faulty
75	C1275	Abnormal change in output voltage of right front speed sensor	81*	C1281*	Master cylinder pressure sensor output signal is faulty

*: Excluding the models with ABS with EBD and brake assist.

▶ **DTC Chart (Blinking VSC Warning Light)** ◀ (Only on models equipped with VSC)

DTC No.		Detection Item	DTC No.		Detection Item
2-digit	5-digit		2-digit	5-digit	
31	C1231	Malfunction in steering angle sensor	44	C1224	Open or short circuit in NEO signal circuit
32	C1232	Malfunction in deceleration sensor	51	C1201	Malfunction in engine ECU
34	C1234	Malfunction in yaw rate sensor	53	C1203	Malfunction in engine ECU communication circuit
36	C1210	Zero point calibration of yaw rate sensor undone	62	U0123	Malfunction in CAN communication with yaw rate sensor
39	C1336	Zero point calibration of deceleration sensor undone	63	U0126	Malfunction in CAN communication with steering angle sensor
43	C1223	Malfunction in ABS control system	Always ON		Malfunction in skid control ECU

▶ **DTC Chart of Sensor Check (Blinking VSC Warning Light)** ◀ (Only on models equipped with VSC)

DTC No.		Detection Item
2-digit	5-digit	
71	C0371	Yaw rate sensor output signal is faulty

Fail-Safe

- In the event of a malfunction in the TRC and/or VSC, the skid control ECU prohibits the TRC and VSC operations.
- In the event of a malfunction in the ABS and/or brake assist, the skid control ECU prohibits the ABS, brake assist, TRC and VSC operations.
- In the event of the malfunction in the EBD control, skid control ECU prohibits the EBD control.
- If a communication malfunction occurs between the skid control ECU and the steering angle sensor or the yaw rate & deceleration sensor, the skid control ECU stops control of the TRC and VSC.
- When the engine ECU detects a DTC, it will be unavailable the TRC and VSC controls.

■MULTIPLEX COMMUNICATION

1. General

- CAN (Controller Area Network) communication has been adopted in the brake control system of the vehicles equipped with the VSC system.
- CAN is a type of on-vehicle multiplex communication system that performs excellent data communication and error detection between ECUs and sensors.
- CAN uses twisted-pair wires, consisting of two wires, CAN-H and CAN-L, which have different voltages to establish communication.
- The CAN in Avensis Verso is connected to the Skid Control ECU, steering angle sensor, yaw rate and deceleration sensor and DLC 3 (Data Link Connector). However, the diagnosis information from the skid control ECU is output from the SIL line.

▶ Characteristic ◀

- Simplifies the wiring harness routing because communication among all the ECUs connected to CAN is made possible through the use of a pair of communication wires.
- Its communication speed is faster than the BEAN (Body Electronics Area Network) used on other models.

Communication Type	CAN	BEAN
Communication Speed	500 Kbps	MAX: 10 Kbps

▶ System Diagram ◀

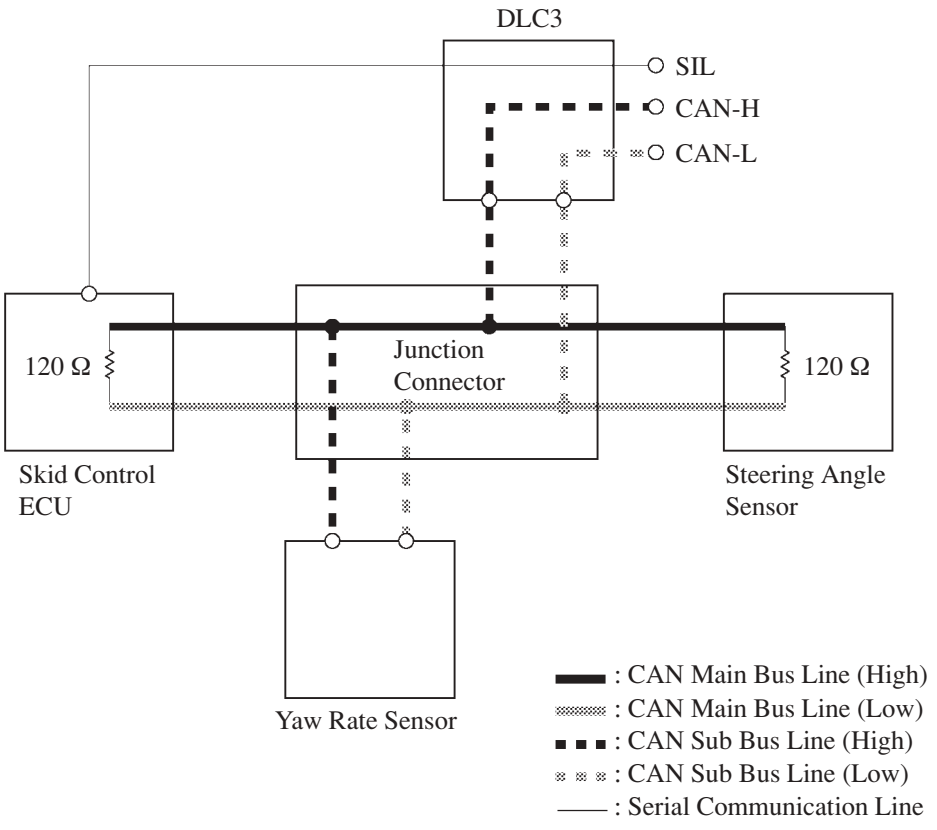

257HL140

2. Layout of Main Components

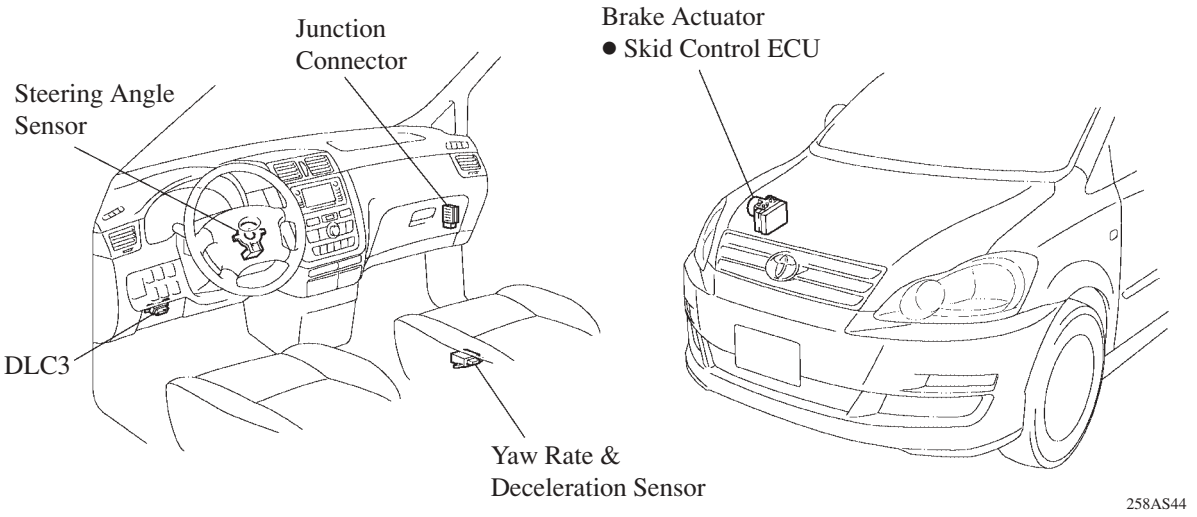

3. Diagnosis

- If the CAN has communication error at ECU or sensor, DTCs (Diagnostic Trouble Codes) are output simultaneously to indicate the malfunction location.
- The DTCs for CAN communication concerning the brake control system can be read by connecting the SST 09843-18040 to Tc and CG terminals of DLC3 connector, and observing the blinking of the ABS and VSC warning light (2-digit code) or by connecting a hand-held tester (5-digit code). For details, see the Avensis Verso Repair Manual Supplement (Pub No.1032E).

▶ DTC Combination Chart ◀

DTC Code Output (from VSC ECU)	Mode
U0121/94, U0123/62 U0124/95, U0126/63	Skid Control ECU communication stop mode
U0123/62, U0124/95	Yaw rate and deceleration sensor communication stop mode
U0126/63	Steering angle sensor communication stop mode

▶ DTC Chart ◀

DTC	Detection Item
U0121/94	Malfunction in CAN communication
U0123/62	Malfunction in CAN communication with yaw rate sensor
U0124/95	Malfunction in CAN communication with deceleration sensor
U0126/63	Malfunction in CAN communication with Steering angle sensor

- DLC3 is equipped with CAN-H and CAN-L terminals for CAN diagnosis. It is possible to determine if there is an open or short on the main bus line by measuring the resistance value between these terminals. It is possible to determine if there is a short between the bus line - power supply/ground by measuring the resistance value between terminal CAN-H or CAN-L, and the BAT or CG terminal.

▶ CAN-H – CAN-L Inspection ◀

Resistance Value	Bus Line Status
Less than 54 Ω	Short between lines (both sub bus lines of main and sub)
54 Ω – 67 Ω	Normal
	Yaw rate & deceleration sub bus line open (DTC is output)
	Short between bus line and power or ground
108 Ω – 132 Ω	Open in main bus line
∞ Ω	Open in DLC3 sub bus line

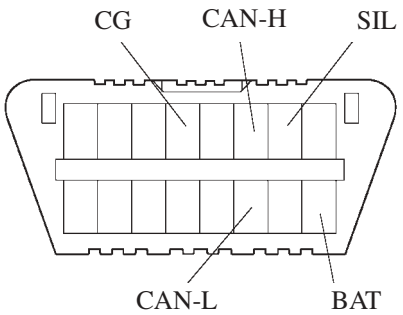

241BE110

▶ Inspection for short between bus line – power supply/ground ◀

Inspection Item	Resistance Value	Bus Line Status
CAN-H – BAT	more than 1 kΩ	Bus line is OK if no DTC is output
	less than 1 kΩ	Short between bus line and power or ground
CAN-L – BAT	more than 1 kΩ	Bus line is OK if no DTC is output
	less than 1 kΩ	Short between bus line and power or ground
CAN-H – CG	more than 3 kΩ	Bus line is OK if no DTC is output
	less than 3 kΩ	Short between bus line and power or ground
CAN-L – CG	more than 3 kΩ	Bus line is OK if no DTC is output
	less than 3 kΩ	Short between bus line and power or ground

- If a communication malfunction occurs between the skid control ECU and the steering angle sensor or the yaw rate & deceleration sensor, the skid control ECU stops control of the VSC (Vehicle Stability Control).
- For details of the CAN diagnosis system, see the Avensis Verso Repair Manual Supplement (Pub. No. RM1032E).

4. Fail-Safe

The fail-safe system provided for each system will operate if a failure occurs in the communication wire such as a short or an open circuit.

- On the new Avensis Verso, the following fail-safe functions will operate if CAN communication is unavailable.

Location of Disabled Communication	Fail-Safe
Skid Control ECU, Yaw Rate, Deceleration sensor, and Steering angle sensor	• Stops VSC/ABS functions • Illuminates VSC indicator light and ABS indicator light • Detects DTCs

■AIR CONDITIONER

1. General

- In accordance with the adoption of the automatic air conditioner, the push button type heater control panel has been used.
- On Australia model, the BEAN communication is adopted for the communication between the A/C ECU and engine ECU.

2. System Diagram

▶ Models for Europe and General Countries ◀

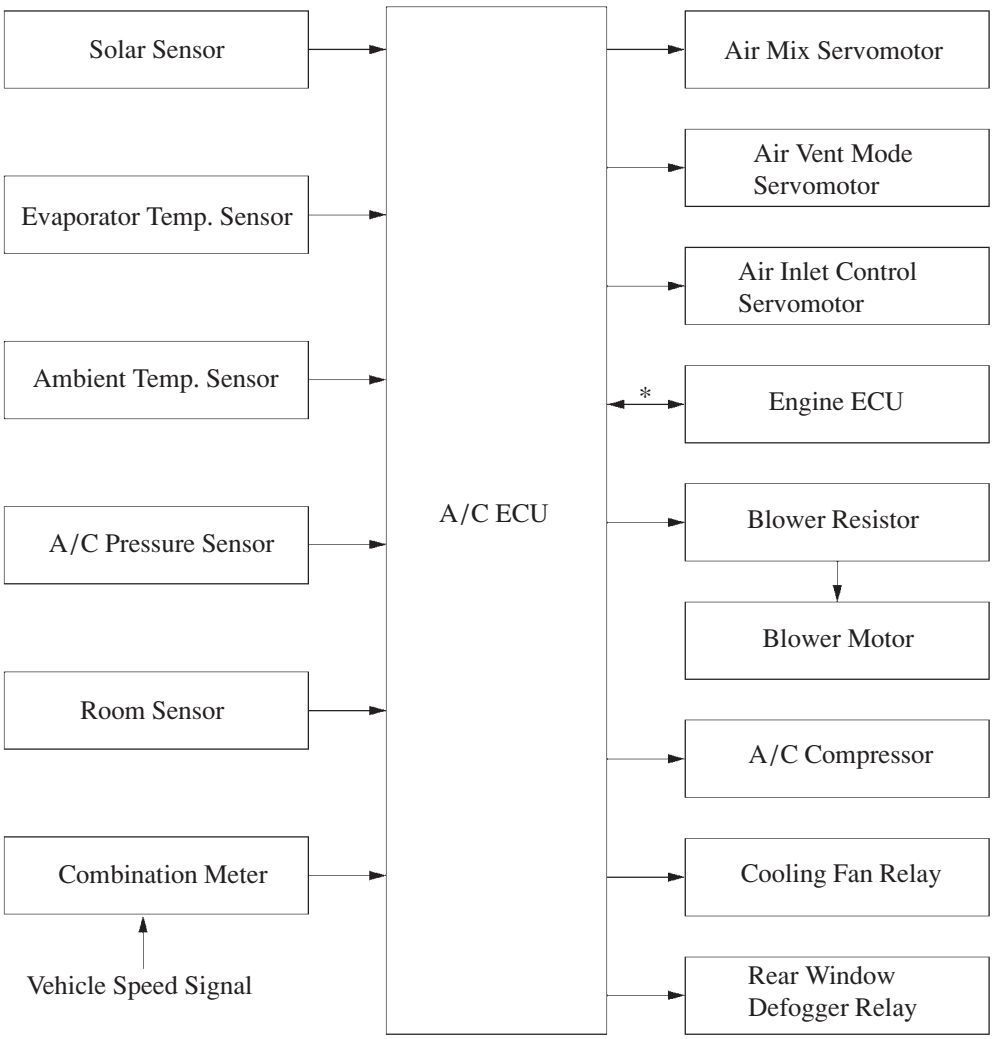

258AS10

*: Water temperature signals are transmitted through serial communication.

▶ Model for Australia ◀

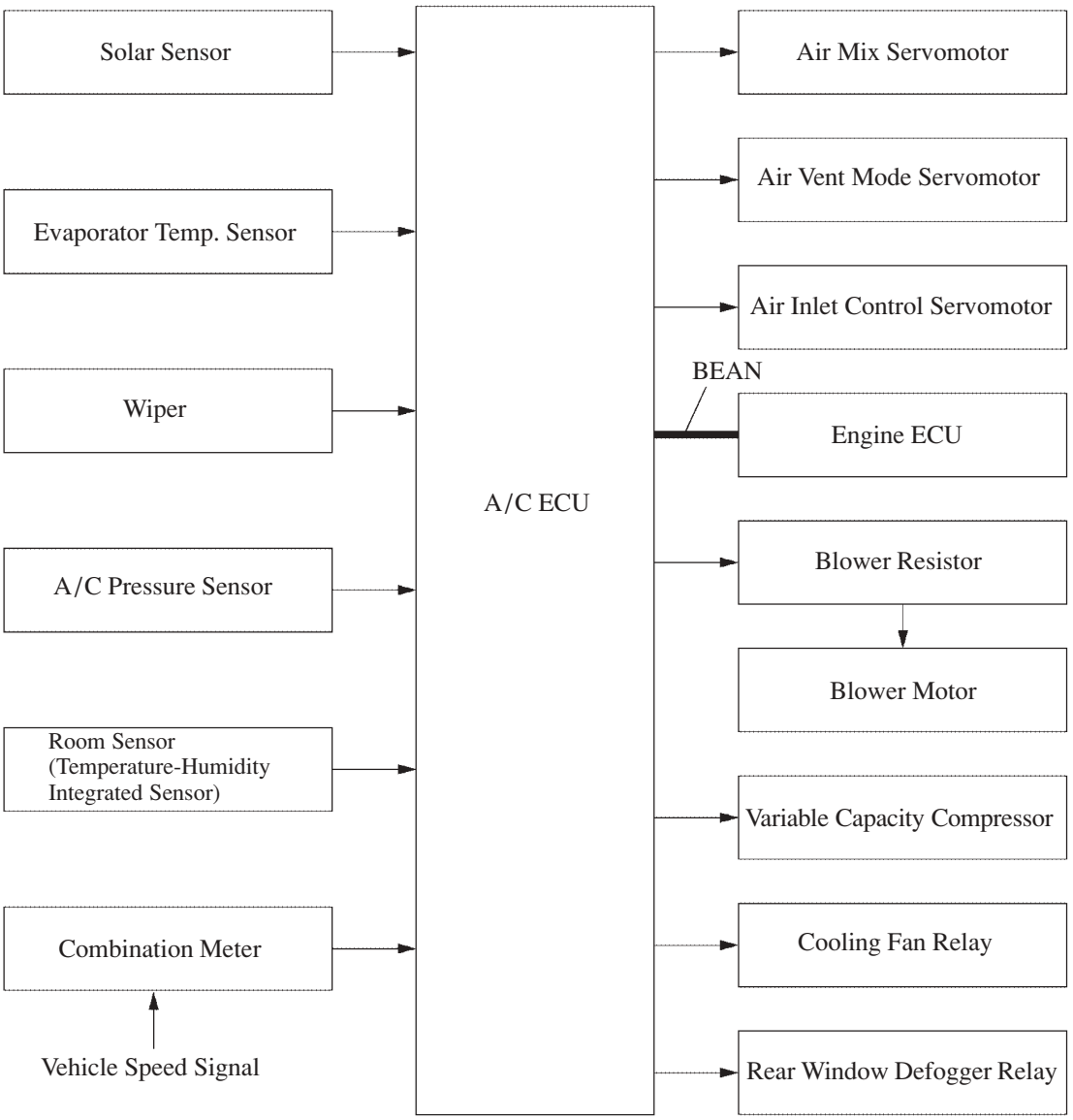

258AS11

3. Layout of Main Components

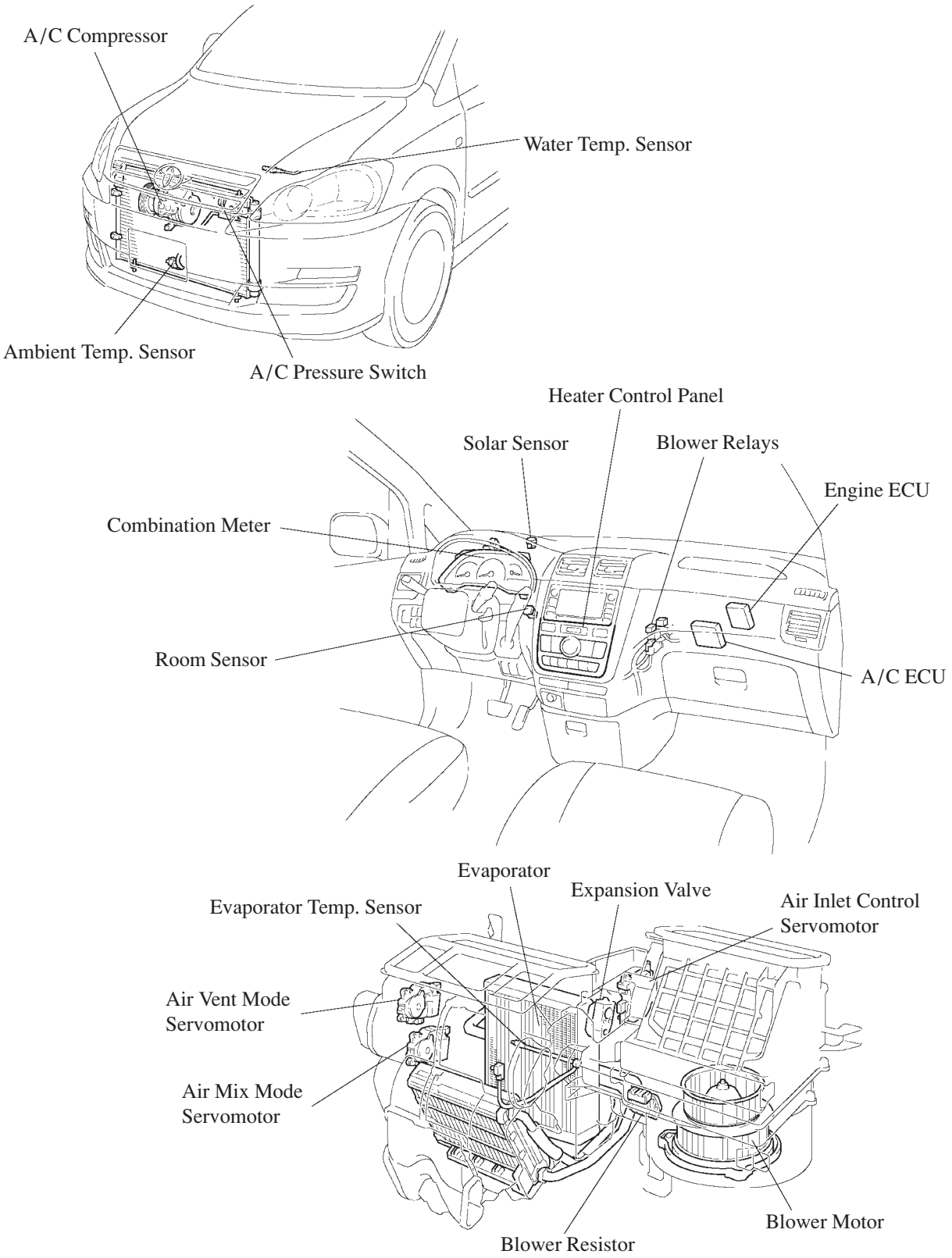

4. Construction and Operation

Heater Control Panel

In accordance with the adoption of the automatic air conditioner, the heater control panel has been changed.

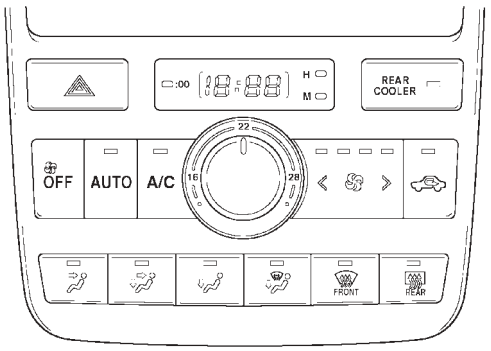

258AS08

Model for Europe

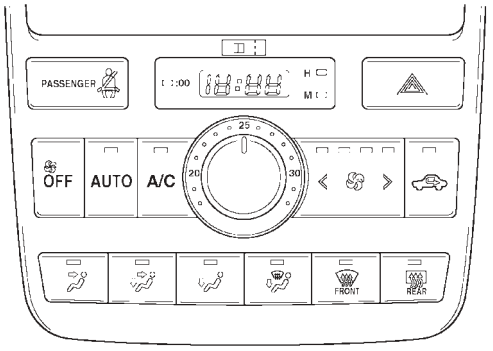

258AS07

Models for Europe and General Countries

Solar Sensor

- This sensor detects the changing of the amount of solar as a changing of voltage supplied in the built-in photo diode.
- This sensor is located in the driver side above the instrument panel.

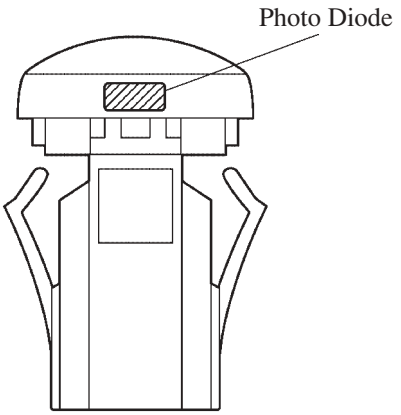

258AS57

Temperature-Humidity Integrated Sensor (only on models for Australia)

- This sensor has a built-in thermister to sense the vehicle interior temperature and output it to the A/C ECU.
- It also contains a humidity-sensing resistance film that absorbs and releases the humidity in the vehicle interior. During the absorption and releasing processes, the humidity-sensing resistance film expands (while absorbing humidity) and contracts (while drying). The clearance between the carbon particles in the humidity-sensing resistance film expands and contracts during absorption and drying, thus changing the resistance between the electrodes. The humidity sensor senses the change in the resistance within the sensor's temperature-humidity detection range, and outputs it to the A/C ECU.

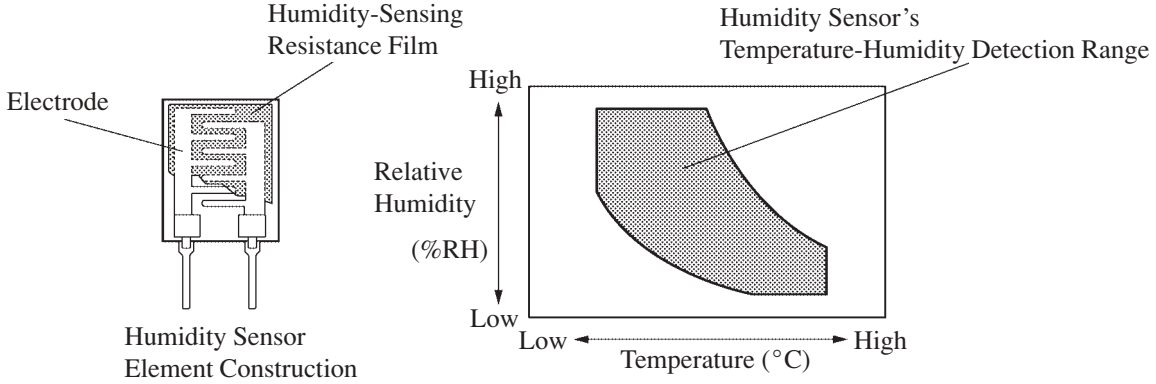

258AS13

Compressor

1) General

This compressor is continuously variable capacity type (6SEU16) in which its capacity varies in accordance with the cooling load of the air conditioner.

- A solenoid control valve that adjusts the suction pressure so that the suction pressure can be controlled as desired is provided.
- A/C pulley has been adopted the plastic DL (Damper Limiter) type.

Service Tip

The compressor cannot be disassembled, so it must be replaced as an assembly.

2) Construction and Operation

a. Plastic DL Type A/C Pulley

This pulley contains a damper to absorb the torque fluctuations of the engine and a limiter mechanism to protect the drive belt in case the compressor locks. In the event that the compressor locks, the limiter mechanism causes the spoke portion of the pulley to break, thus separating the pulley from the compressor. To reduce weight, the pulley portion is made of plastic.

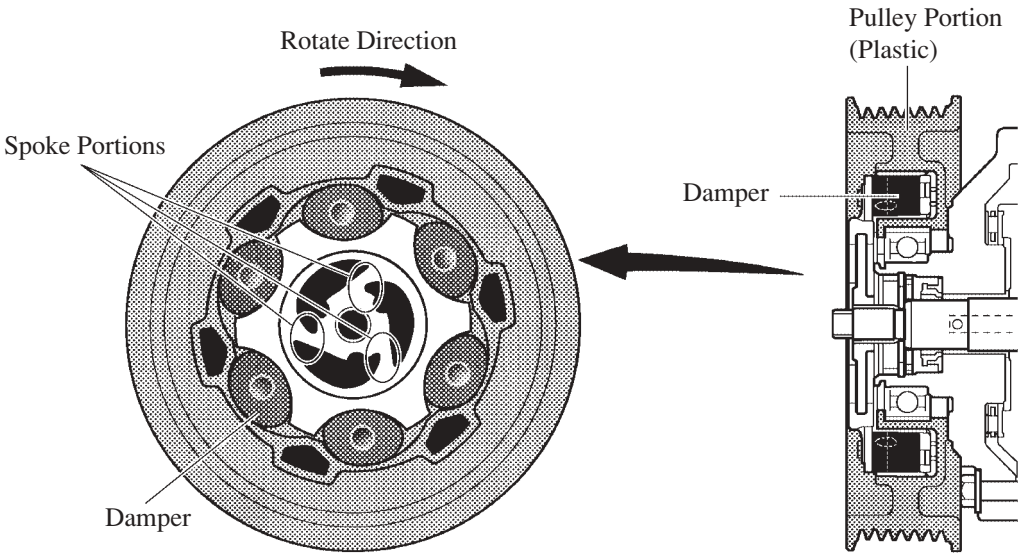

Limiter Mechanism

240BE92

b. Compressor

- This compressor consists of the shaft, lug plate, piston, shoe, crank chamber, cylinder, and solenoid control valve. When the shaft rotates, this movement is transmitted via the lug plate that is connected to the shaft to rotate the swash plate. This rotational movement of the swash plate is transmitted via the shoe to the reciprocal movement of the piston in the cylinder, which performs the suction, compression, and discharge of the refrigerant.

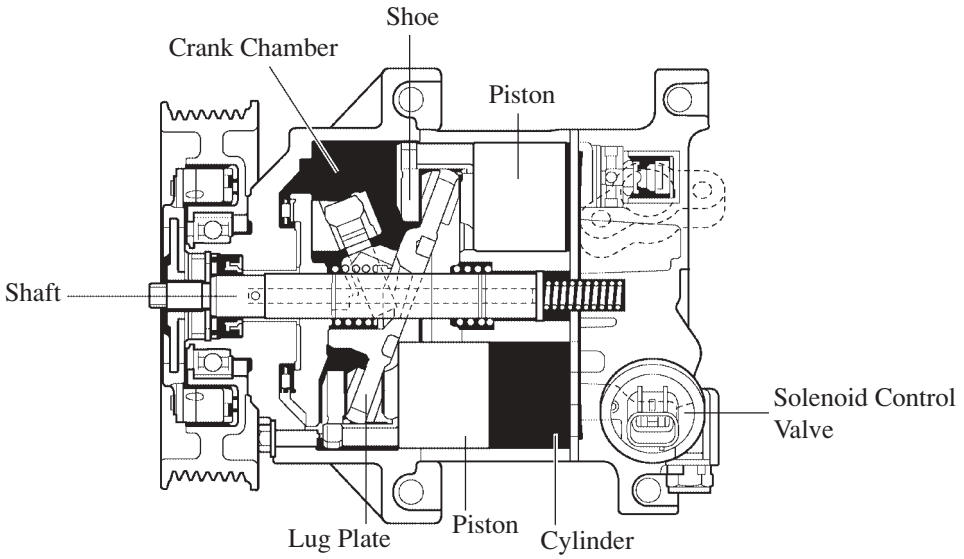

240BE93

- The crank chamber is connected to the suction passage. A solenoid control valve is provided between the suction passage (LO pressure) and the discharge passage (HI pressure). The solenoid control valve operates under duty cycle control in accordance with the signals from the A/C ECU. Duty cycle control, which changes linearly between 0 to 100%, varies the discharge capacity.

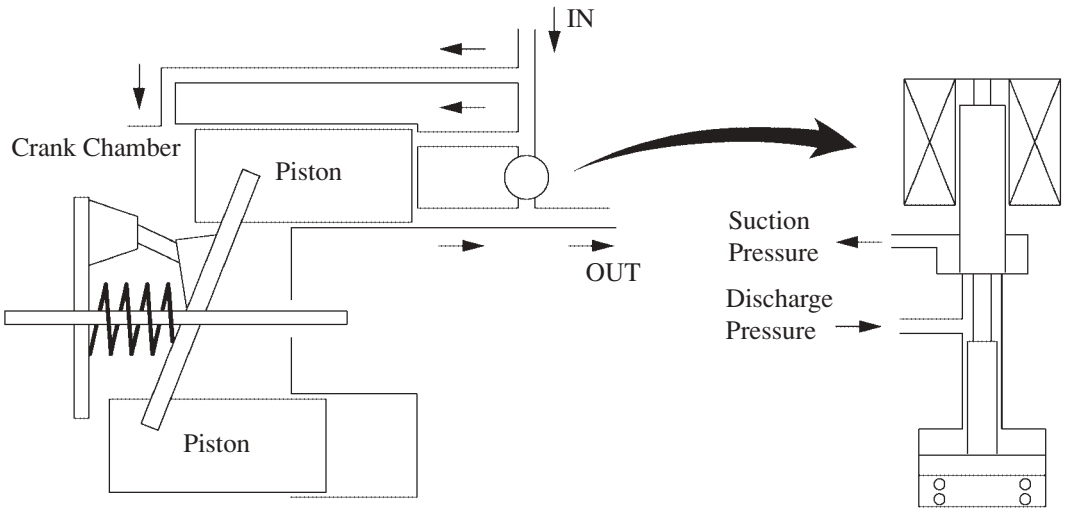

Solenoid Control Valve

240BE94

- When the solenoid control valve closes (solenoid coil is energized), a difference in pressure is created and the pressure in the crank chamber decreases. Then, the pressure that is applied to the right side of the piston becomes greater than the pressure that is applied to the left side of the piston. This compresses the spring and tilts the lug plate. As a result, the piston stroke increases and the discharge capacity increases.

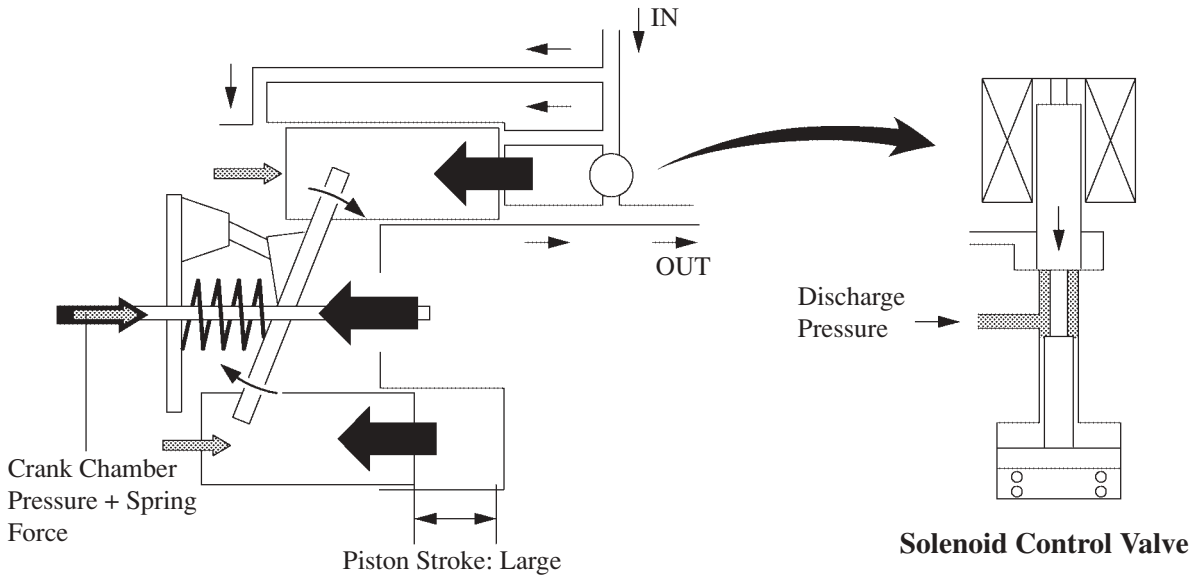

240BE95

- When the solenoid control valve opens (solenoid coil is not energized), the difference in pressure disappears. Then, the pressure that is applied to the left side of the piston becomes the same as the pressure that is applied to the right side of the piston. Thus, the spring elongates and eliminates the tilt of the lag plate. As a result, there is no piston stroke and the discharge capacity turns to 0.

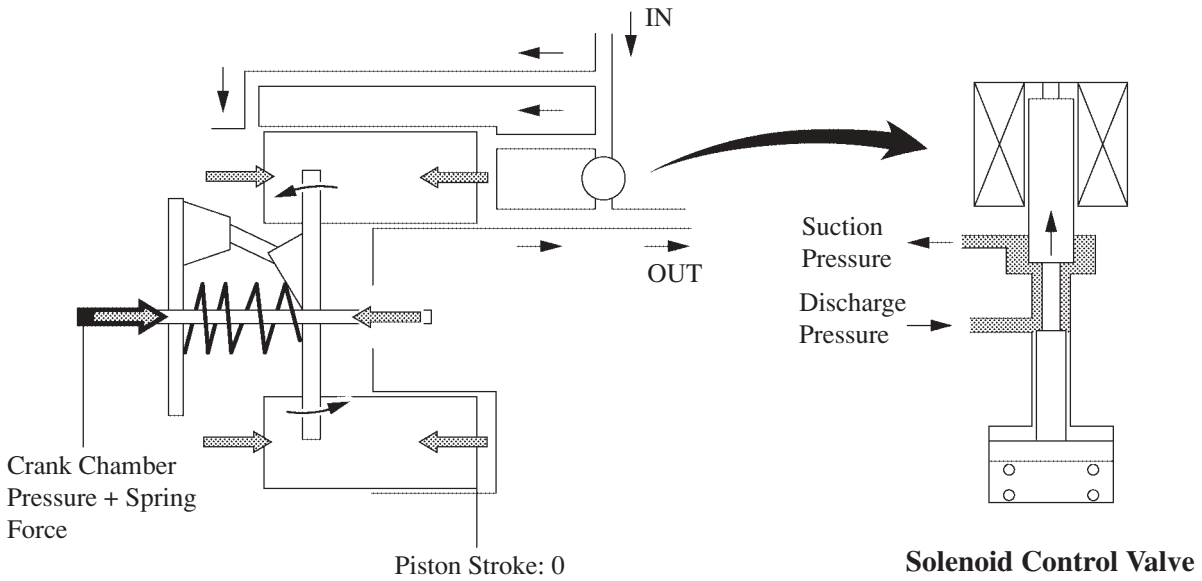

240BE96

5. Air Conditioner Control

The air conditioner ECU has following control.

Control		Outline
Calculation of Required Outlet Air Temperature (TAO: Temperature Air Outlet)		After receiving the signals from the sensors and the temperature control switching setting for driver and front passenger. Then, it uses a prescribed formula to calculate the required outlet air temperature, and regulate the servomotors and the blower motor. This outlet air temperature is required in order to maintain the set temperature in a stable manner.
Outlet Air Temp. Control	MAX Fix Control	This control sets the TAO to –200 when the temperature is set to MAX COOL, and to 200 when the temperature is set to MAX HOT.
	Air Mix Damper Control	In response to the temperature control switch setting, the required outlet air temperature, evaporator temperature sensor, and water temperature sensor compensations are used by the air mix damper control to calculate a tentative damper opening angle, through an arithmetic circuit in the air mix damper, to arrive at a target damper opening angle.
		This control calculates a tentative damper opening angle for the resistance value in accordance with the temperature control switch setting, and arrives at a target damper opening angle through an arithmetic circuit in the air mix damper.
Blower Control	Blower Motor Start Up Control	When the blower motor is started up, the blower voltage in the LO speed in output to the blower controller for 2 seconds. This is designed to protect the blower controller from a sudden start up voltage surge.
	Automatic Control	**Step Less Air Volume Control:** ● When the AUTO switch in the heater control panel is pushed, the A/C ECU automatically regulates the voltage to the blower controller, in accordance with the required outlet air temperature, to deliver step less air volume. **Warm-up Control:** ● When the air outlet is in the FOOT, BI-LEVEL, or FOOT/DEF mode, the blower will not operate until the water temperature increases above a prescribed value. When the temperature increases above a prescribed value, the blower motor operates at the LO speed. Thereafter, control is effected by comparing the airflow calculated from the water temperature and the airflow calculated from the TAO.
		Time-Lagged Air Flow Control: ● 2 types of time-lagged air flow control (in accordance with the detected by the evaporator temperature sensor) help prevent hot air from being emitted from FACE or BI-LEVEL vent. For details, see page 265.
	Automatic Control	**Sunlight Air Flow Control:** ● Controls the blower speed in accordance with the intensity of the sunlight when the air outlet mode is at FACE or BI-LEVEL. The blower speed can be adjusted in response to the signal received from the solar sensor.
Air Outlet Control	Manual Control	Changes the air outlet in accordance with the selected position of the mode select switch.
	Automatic Control	**Mode Damper Switching Servomotor Control:** ● When the AUTO switch of the heater control panel has been turned ON, automatic control causes the mode servomotor to rotate to a desired position in accordance with the target damper opening, which is based on the calculation of the TAO. **Low-Temperature FOOT/DEF Control:** ● In accordance with the water temperature, ambient temperature, amount of sunlight, required outlet temperature (TAO), and vehicle speed conditions, this control automatically switches the blower outlet between the FOOT/ DEF modes to prevent the window from becoming fogged when the outside air temperature is low.

Control		Outline
Compressor Control	Refrigerant Pressure Malfunction Detection	By monitoring the A/C pressure sensor signal, this system can judge the refrigerant pressure as being abnormal and turns the operating capacity of the compressor to 0%.
	Evaporator Temperature Sensor Judgment	When the detected temperature of the evaporator temperature sensor is below –4, the operating capacity of the compressor turns to 0% in order to prevent the evaporator from becoming frosted.
	Ambient Temp. Sensor Judgment	When the detected temperature of the ambient temperature sensor is below –1.5, the operating capacity of the compressor turns to 0%.
	Evaporator Supercooling Control	When the vehicle is decelerating, this control implements evaporator supercooling in order to reduce the operation rate of the compressor during idle. For details, see page 266.
	Variable Capacity Compressor Control*	The variable capacity compressor control consists of 5 controls. For details, see page 266. ● Acceleration Control ● Low-Speed Control ● Frost Control ● A/C switch ON/ OFF Control ● Compressor Protect Control
Electronic Cooling Fan Control		The A/C ECU and the engine ECU control the cooling fan speed in accordance with the water temperature signal, vehicle speed signal, and refrigerant pressure signal.
Rear Window Defogger Control		Switches the rear defogger and outside rear view mirror heaters on for 15 minutes when the rear defogger switch is switched on. Switches them off if the switch is pressed while they are operating.
Self-Diagnosis		Check the indicator, sensor, and actuator the check in accordance with operation of the heater control panel switches, then LCD portion a DTC (Diagnostic Trouble Codes) to indicate if there is a malfunction or not.

*: Only on the models for Australia

Time-Lagged Air Flow Control

1) General

2 types of time-lagged air flow control (in accordance with the detected by the evaporator temperature sensor) help prevent hot air from being emitted from FACE or BI-LEVEL vent.

a. Evaporator Temperature Sensor Above 30°C

1) As shown in the diagram on the below, this control turns OFF the blower motor for T1 sec. and turns ON the compressor to cool the air conditioner unit. After T1 sec. has elapsed, the blower motor rotates in the manual LO mode, allowing the cooled air to be discharged from the vents. Thus, the discomfort that is associated with the discharge of warm air is prevented.
2) Between T2 and T3 sec. the air flow volume according to the time-lagged air flow control and the air flow volume of the blower control according to the calculation of the TAO are compared. The air flow volume is then regulated at the smaller volume of the two.
3) After T3 sec. has elapsed, control is effected by the blower control according to the calculation of the TAO.

b. Evaporator Temperature Sensor Below 30°C

1) As shown in the diagram on the below, for T1 sec., the blower motor rotates in the manual LO mode.
2) Thereafter, up to T2 sec., the air flow volume according to the time-lagged air flow control and the air flow volume according to the blower control of the calculation of the TAO are compared. The air flow volume is then regulated at the smaller volume of the two.
3) After T3 sec. has elapsed, control is effected by the blower control according to the calculation of the TAO.

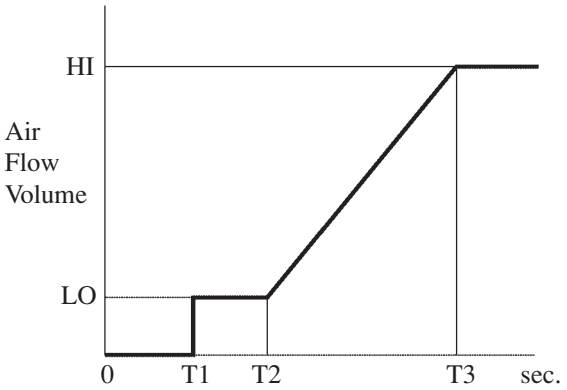

240BE75

Above 30°C

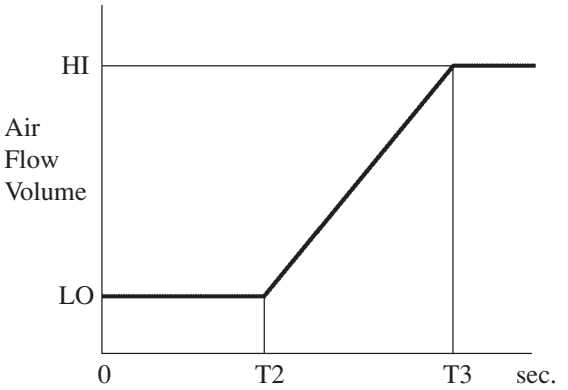

240BE45

Below 30°C

c. Evaporator Supercooling Control

In the entire deceleration range of the vehicle, this control implements evaporator supercooling, in order to reduce the operation rate of the compressor during idle. As a result, fuel economy has been improved.

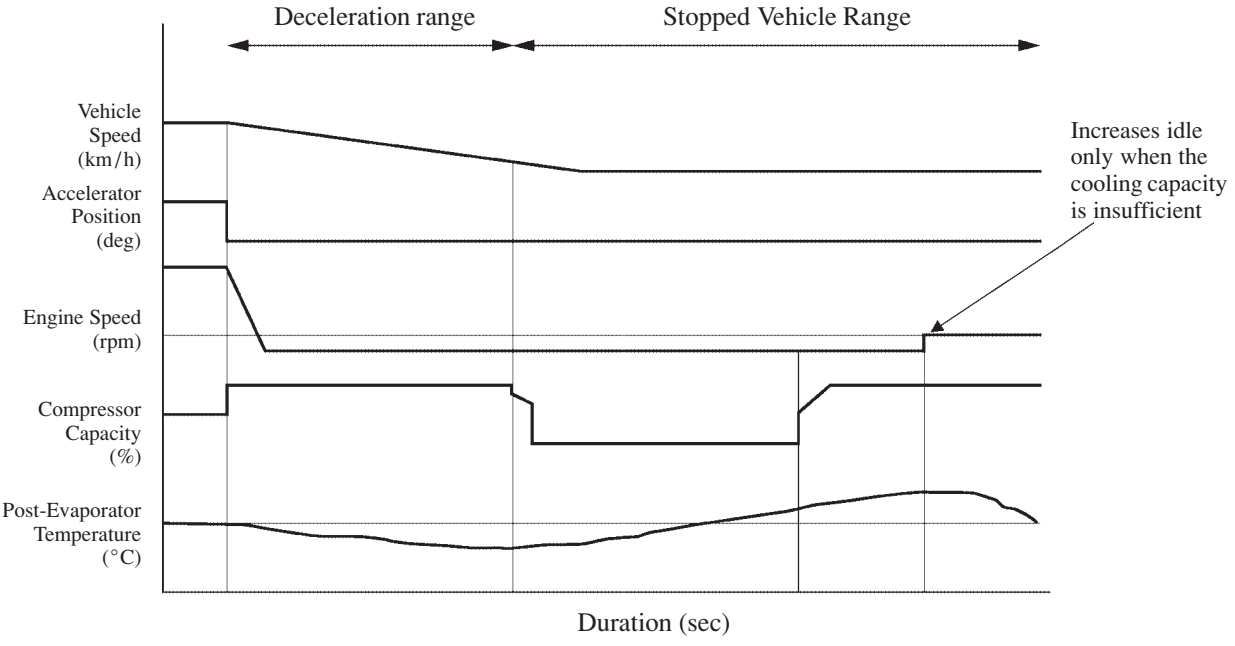

Variable Capacity Compressor Control

1) General

The variable capacity compressor control constantly compares the compressor operating capacities that have been calculated. It uses the lowest among them as the actual compressor operating capacity. As a result, efficient compressor control is realized to suit the air conditioner operation conditions and the vehicle driving conditions.

- Acceleration Control
- Low-speed Control
- Frost Control
- A/C Switch ON/ OFF Control
- Compressor Protect Control

2) Acceleration Control

The acceleration control consists of start off and passing acceleration control.
The A/C ECU controls the cooling capability during acceleration in accordance with the ambient temperature, internal temperature, and the set temperature.
It varies acceleration control during the cool down state and other states in order to control the capacity of the compressor. This prevents the vehicle's acceleration performance from being negatively affected and improves fuel economy, while ensuring the proper cooling performance.
After effecting acceleration control, the A/C ECU effects constant-speed capacity control in order to optimally control the compressor capacity.

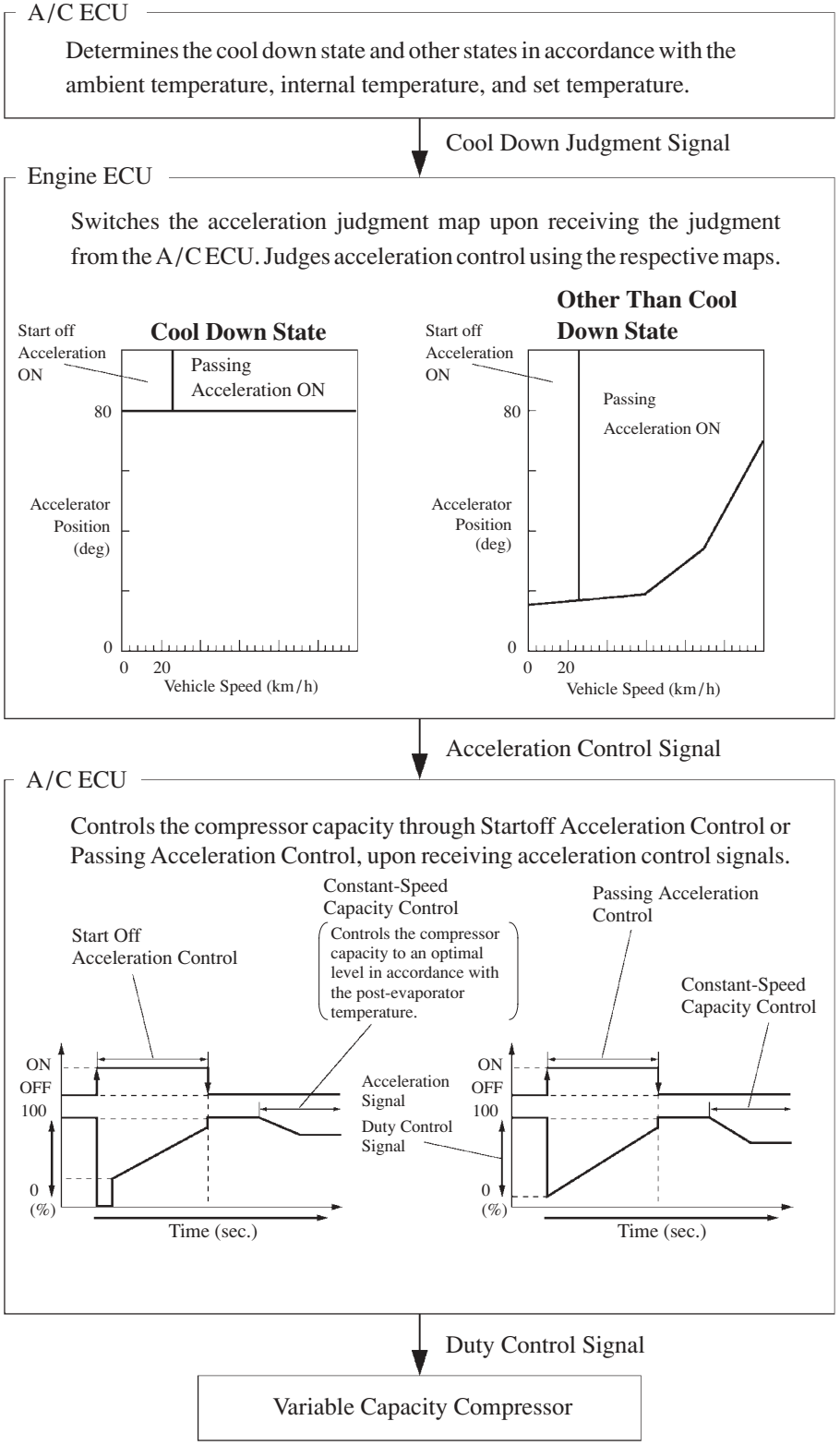

258AS43

3) Low-speed Control

When the engine ECU inputs an acceleration signal at low engine speeds, the A/C ECU lowers the compressor operating capacity output as shown in the table below. As a result, proper drivability at low engine speeds is ensured.

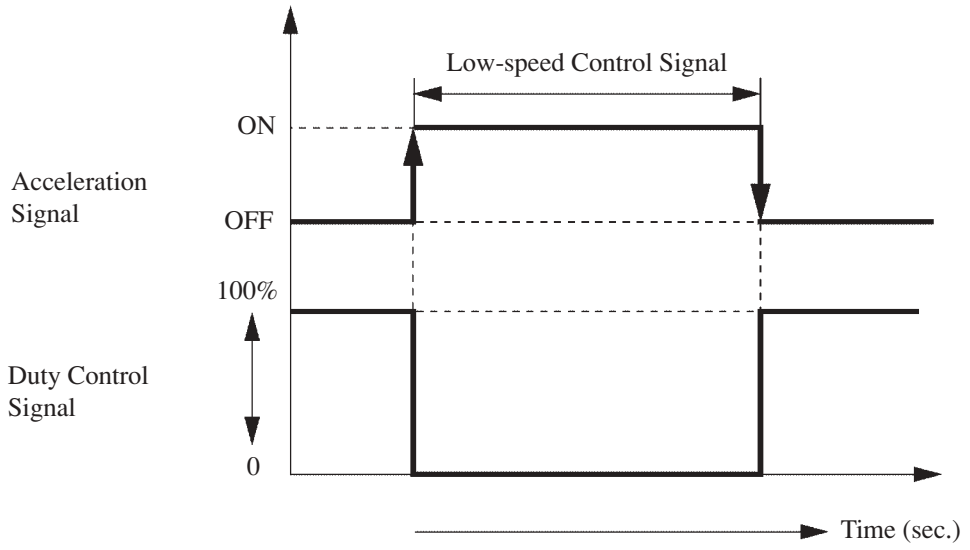

240BE50

4) Frost Control

To prevent the evaporator from frosting, this control calculates the compressor operating capacity using a calculation formula that has been established based on deceleration control, evaporator temperature sensor, and A/C pressure sensor signal.

5) A/C Switch ON/ OFF Control

Controls the compressor operating capacity as shown in the following table in accordance with the A/C switch.

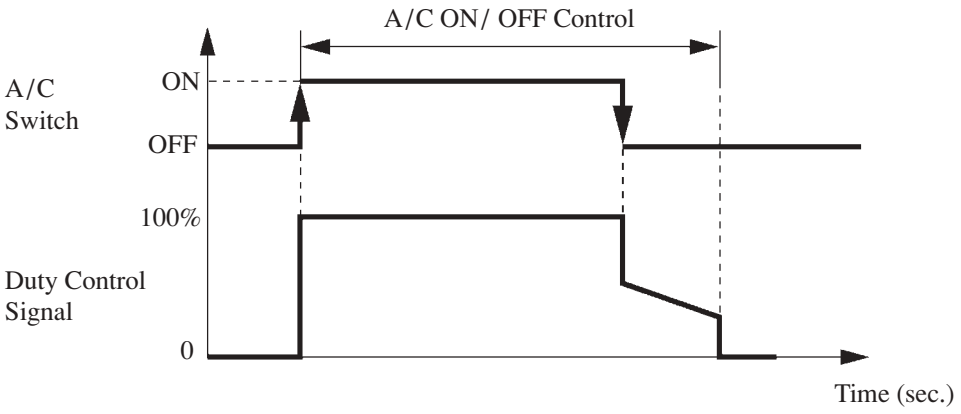

240BE51

6) Compressor Protect Control

The A/C ECU controls the compressor operating capacity as shown below in accordance with the engine speed.

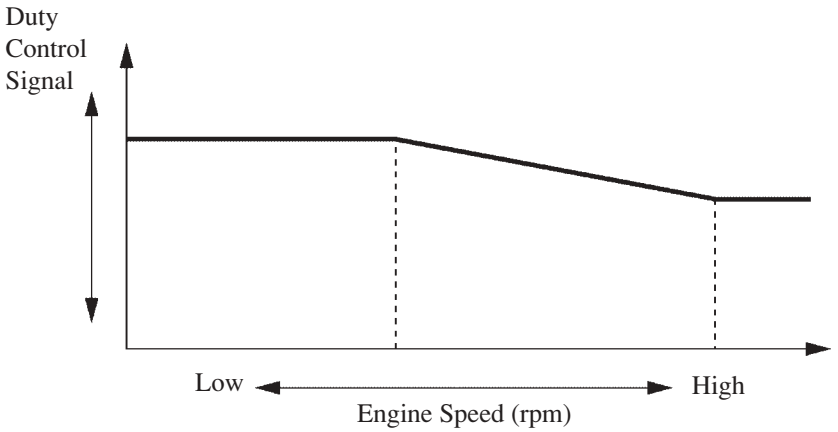

240BE53

Self-Diagnosis

- The A/C ECU has a self-diagnosis function. The self-diagnosis mode, which starts when the switches on the heater control panel are operated as shown below, has three functions: indicator check, sensor check, and actuator check.

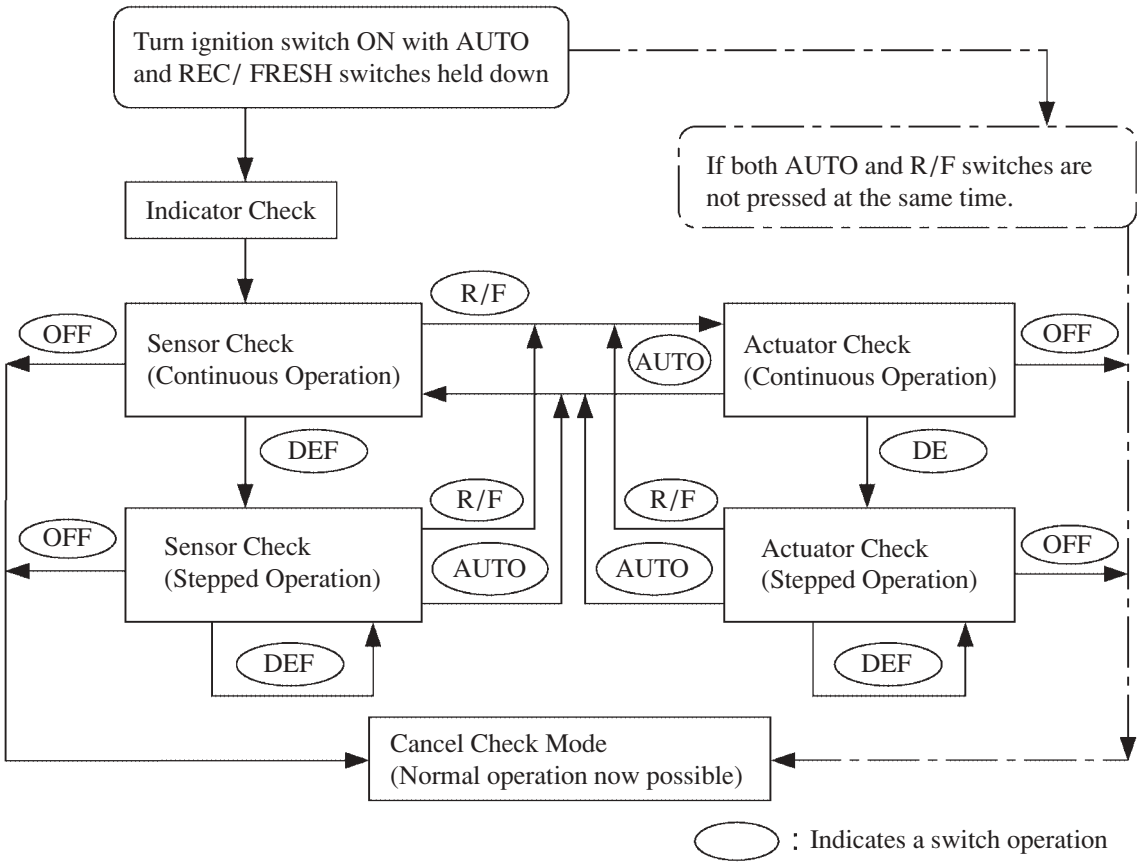

187BE33

▶ Function ◀

Function	Outline
Indicator Check	Checks indicator lights and temperature setting display.
Sensor Check	Checks the past and present malfunctions of the sensors, and clearing the past malfunction data.
Actuator Check	Checks against actuator check pattern if blower motor and servomotors are operating correctly according to signals from A/C ECU.

■NAVIGATION WITH AV SYSTEM

1. General

- The design of the screen has been improved in the navigation with AV system in order to improve its visibility. Furthermore, new functions have been added for improved convenience.
- The navigation voice guidance can be selected from eight languages: English, German, French, Dutch, Italian, Danish, Swedish and Spanish.

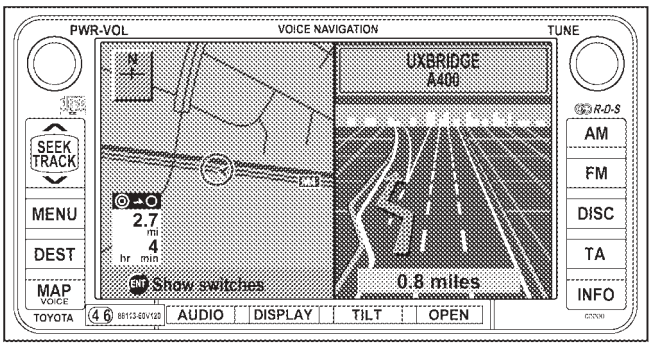

251EQ01

▶ System Diagram ◀

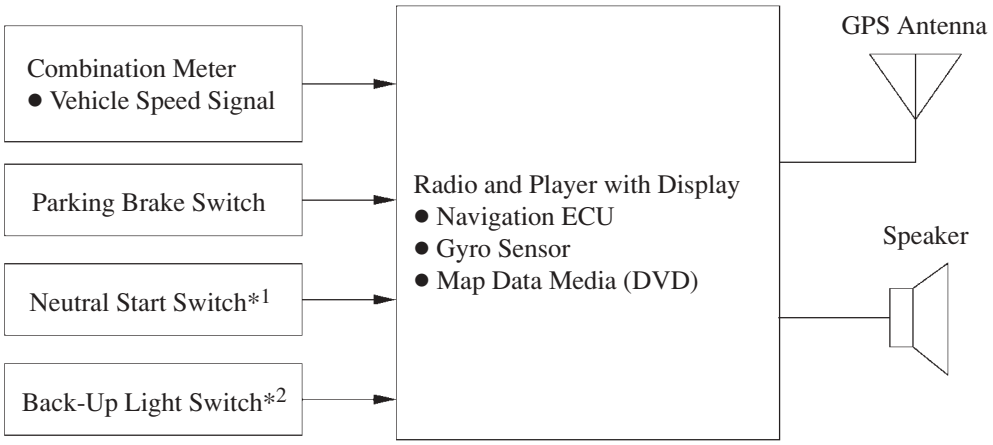

251BE38

*1: For Automatic Transaxle model
*2: For Manual Transaxle model

4

2. Layout of Main Components

Radio and Player with Display

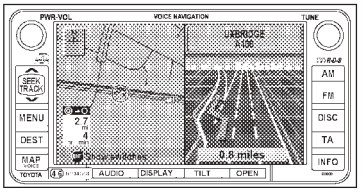

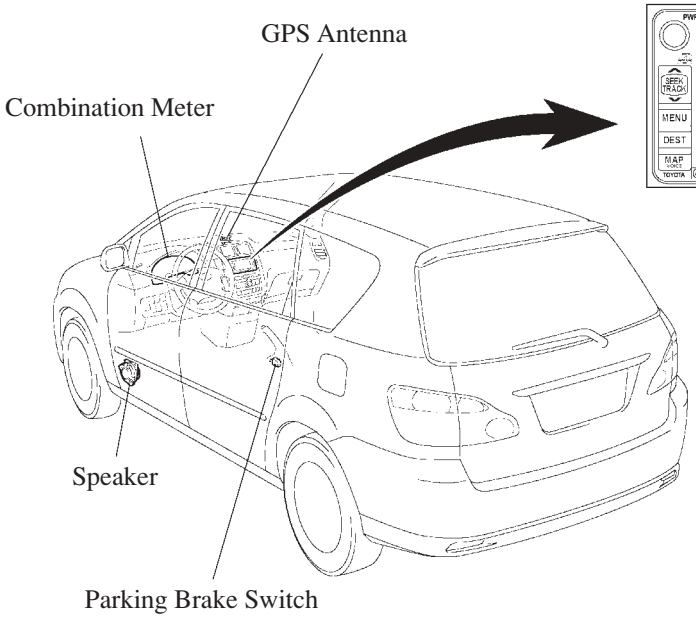

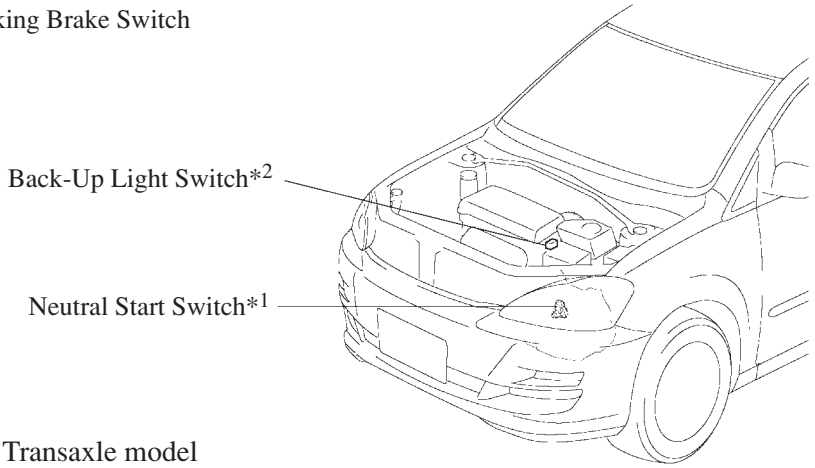

*1: For Automatic Transaxle model
*2: For Manual Transaxle model

258AS33

3. Navigation Screen Display

- The new Avensis Verso has the GPS voice navigation system functions listed below:

: New function

Item		Function
Map Display	Linear Touch Scroll	Enables smooth scrolling by connecting the touch points on the screen
	On-route Scroll	Scrolls the center of the cursor forward and reverse constantly along the route.
	Heading Up	Displays the map so that the direction of the route progression head up during route guidance.
	Map Color Change	Depending on the position of the headlight switch, the screen changes to the day mode or night mode.
	Front Wide	Displays a map in the direction of travel of the vehicle in an enlarged form. (Heading up only)
	Multi-step Scale Display	Changes and displays the map scale in 13 stages.
	Step-less Scale Display	Changes the scale of the map to the desired scale without the basic 13 steps.
	Direct Scale Change	Directly selects and displays the map scale.
	Split-view Display	Displays different modes on a screen that is split into two views.
	Points-of-Interest Display	Displays selected types of marks on the map.
	Color Change	are turned ON.
	Road Number Sign Board Display	Displays the road number on the map.
	Compass Mode Screen	Displays the direction of travel and detailed data of the present location.
	RDS-TMC info. Indication (for Europe model)	Receives FM multiplex broadcasts and displays traffic information on the map screen.
	Map Coverage Info Screen	Displays the map area that is recorded on DVD.
	Whole Route function (except for Australia model)	Changes the display scale of the map screen and displays the whole route.
	Street Name Indication on Scrolled Map	Displays the street name and the city name even when the map screen is being scrolled.
Destination Search	Last Destination Memory	Stores 20 locations of coordinates, names and times that have been set as destinations in the past.
	Hybrid Points-of-interest Search	Narrows the search by names of the points-of-interest, category, and areas.
	Points-of-interest Pinpoint Display	Pinpoints and displays the position of the point-of-interest.
	House Number Search	Searches for a house number.
	Special Memory Point	Sets a pre-registered point as a destination point while driving.
	Nearest Point-of-interest Search List Display	Searches nearest points-of-interest and displays a list.
	Intersection Search	By specifying two streets, the point at which they intersect is set as the destination point. (Only for the intersections of trunk roads.)
	Motorway Entrance/Exit Search	Searches for the destination by the name of the street that connects to a Motorway entrance/exit.
	Coordinate Search	User can input destination like a oasis in the desert etc.
	Telephone Number Search (except for Australia model)	Searches a facility by its telephone number.
	POI, Brand Icon Indication (except for Australia model)	Displays icons for points of interest.

(Continued)

Item	Function	
Route Search	Multiple Destination Setting	Sets multiple destinations. It can also rearrange the sequence of thedestinations.
	Route Search	Searches for multiple routes.
	Search Condition Designation	Searches for the recommended, shortest, and other routes.
	Regulated Road Consideration	Performs search while considering regulated roads.
	Avoidance Area	Avoids a designated area and searches a route.
	Route Search Considering Traffic Info. (for Europe model)	Searches for a route that detours traffic congestion.
	Motorway Mode Screen (except for Australia model)	Displays information on facilities in the vicinity of the motorway exits and entrances.
	Border Guidance (except for Australia model)	Displays a border mark when crossing a border.
Guidance	Destination Direction	Uses arrows along the road to display the direction of the
	Arrow Display	destination during route guidance.
	Off-Route Arrow Display	Uses arrows to display the direction of the destination during off-route.
	Rotary Guidance	Guidance that renders the entry and exit into a rotary as a single branching point.
	Right or Left Turn Guidance	Voice guidance to instruct the direction of travel to be taken.
	Motorway Direction of Travel Guidance (except for Australia model)	Voice guidance to instruct the direction of travel to take on the Motorway.
	Distance Display Destination	Displays the distance from the present location to the destination.
	Motorway Branch Type Specimen Guidance	Type specimen for guidance to a Motorway branch.
	Intersection map Display	Intersection map appears approaching an intersection.
	Turn List Display	Displays a turn list on the right side of the two-screen display.
	Calendar	Anniversary or appointment dates can be input and displayed.

3) Diagnosis Screen Display

The navigation system is equipped with a self-diagnosis function and can display the diagnosis menus shown on the right.
The diagnosis menu contains the following three items.
a) Service Check Menu
b) Display Check
c) Navigation Check

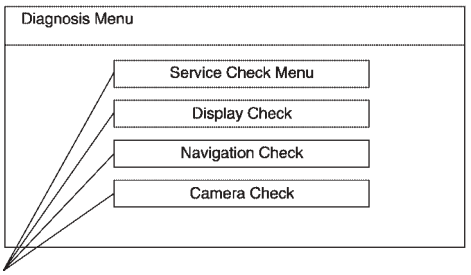

242BE27

Service Tip

The diagnosis menu screen can be displayed according to the procedure given below.
1) Vehicle speed should be 0 km/h (0 mph).
2) Apply the parking brake.
3) Turn the ignition switch to ACC or ON.
4) Push the DISPLAY button.
5) Activate the screen adjustment screen.
6) Alternately touch the upper and lower bottom parts of the left end of the screen 3 times.

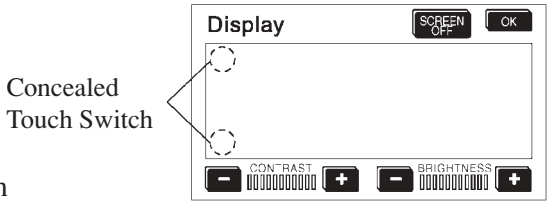

199BE404

For details, refer to the Avensis Verso Repair Manual Supplement (Pub. No. RM1032E).

■CRUISE CONTROL SYSTEM

1. General

- Once the system is set to a desired vehicle speed, the throttle valve position is adjusted automatically to maintain the vehicle speed at that speed without depressed the accelerator pedal.
- The cruise control ECU has been integrated in the engine ECU.

▶ System Diagram ◀

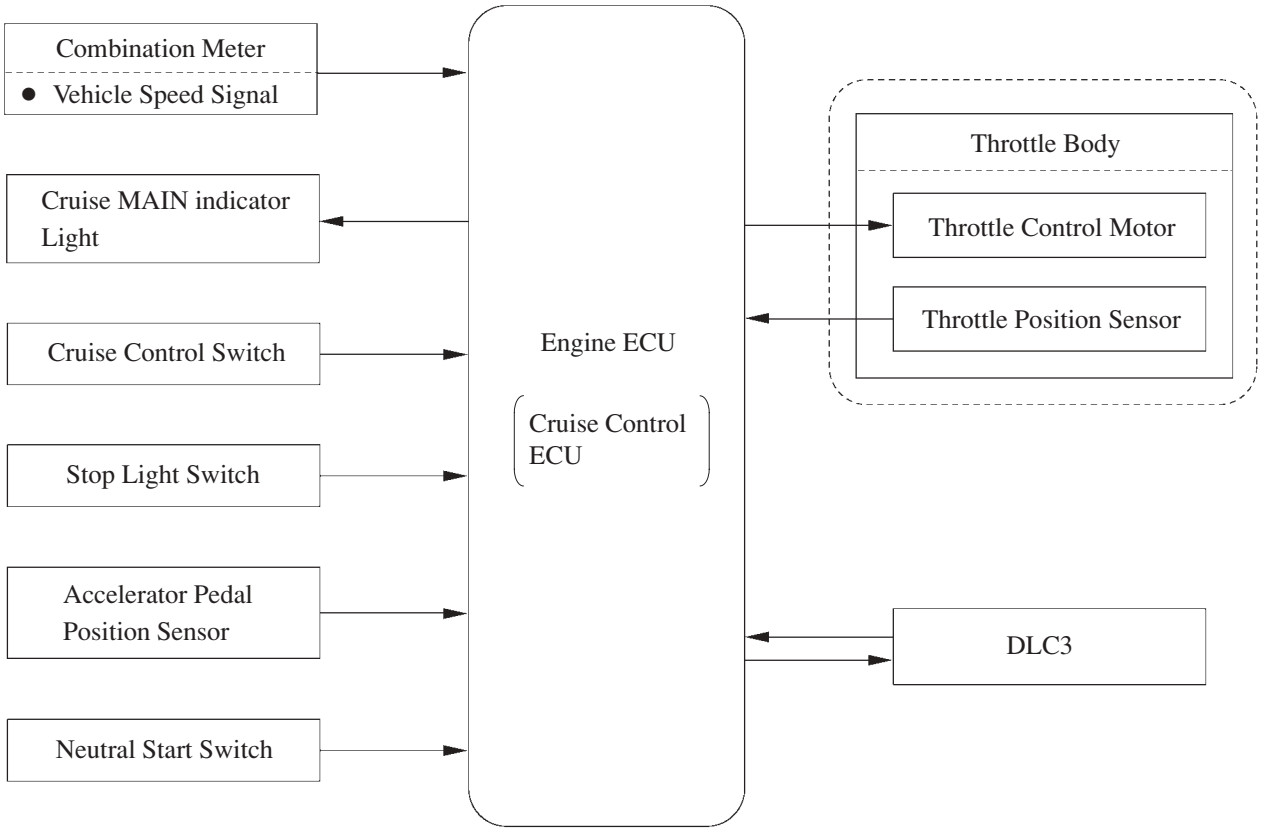

258AS34

2. Layout of Main Components

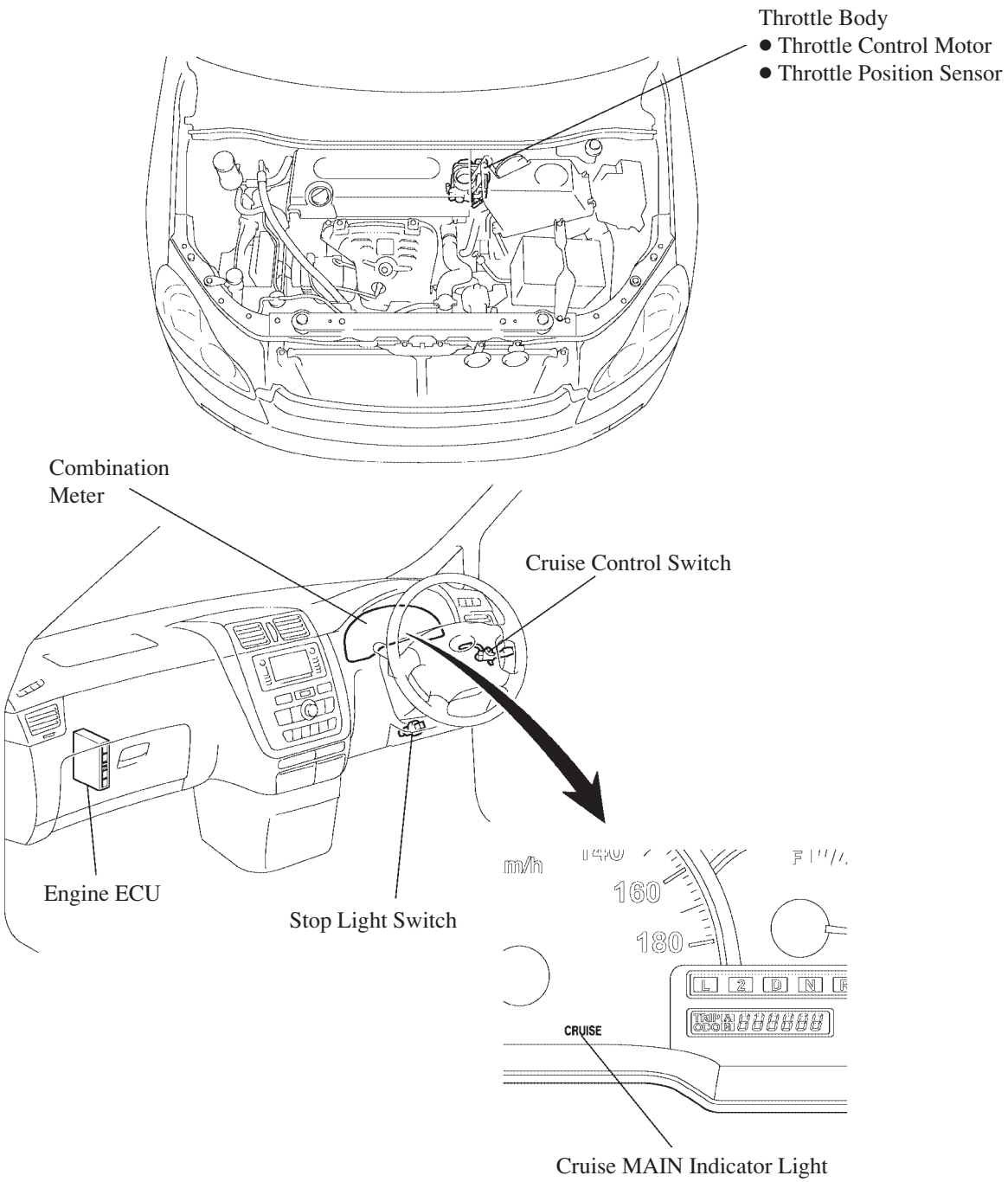

258AS35

3. Function of Cruise Control System

The cruise control has the following functions.

Function	Outline
Constant Speed Control	The engine ECU compares the actual vehicle speed and the set speed and if the vehicle speed is higher than the set speed, it activates the throttle control motor in the throttle closing direction. If the vehicle speed is lower than the set speed, it activates the throttle motor in the throttle opening direction.
Set Control	When this system fulfills the following conditions, and the cruise control switch is pressed to the SET/– side and released with the MAIN switch turned on, the engine ECU stores the vehicle speed and controls it constantly at that speed. ● The vehicle is running within a cruising speed control range [from approx. 36 km/h (23 mph) to 200 km/h (124 mph)].
Coast Control	When the cruise control switch is kept pushed to the SET/– side while running in the cruise control mode, the throttle control motor is energized in the throttle closing direction. The vehicle keeps decelerating the engine ECU stores the vehicle speed when the hand is released from the cruise control switch. From then on, the engine ECU controls the vehicle speed at that speed constantly.
Tap-Down Control	When the difference between the actual vehicle speed and the set speed is less than 5 km/h (3 mph), the set speed can be lowered approx. 1.6 km/h (1 mph) each time by operating the SET/– switch quickly within approx. 0.5 seconds.
Accelerator Control	When the cruise control switch is kept pushed to the RES/+ side while running in the cruise control mode, the throttle control motor is energized in the throttle opening direction. The vehicle keeps accelerating and the engine ECU stores the vehicle speed when the hand is released from the cruise control switch. From then on, the engine ECU controls the vehicle speed at that speed constantly.
Tap-Up Control	When the difference between the actual vehicle speed and the set speed is less than 5 km/h (3 mph), the set speed can be increased approx 1.6 km/h (1 mph) each time by operating the RES/+ switch quickly within approx 0.5 seconds.
Low Speed Limit Control	The low speed limit is the lowest speed that cruise control can be set and is designed at approx. 36 km/h (23 mph). The cruise control cannot be set below that speed. If the vehicle speed drops below that speed while running in the cruise control mode, the cruise control is cancelled automatically and the set speed memorized is cleared.
High Speed Limit Control	The high speed limit, which is the highest speed to which the cruise control can be set, is designed to be approximately 200 km/h (124 mph). Thus, the cruise control cannot be set if the speed at which the vehicle is being driven is higher than the high speed limit. Also, it is not possible to accelerate the vehicle higher than the high speed limit by operating the RES/+ switch.
Manual Cancel Control	If any of the following signals is sent to the engine ECU while the vehicle is running in the cruise control, the cruise control is cancelled accordingly. ● Stop light switch ON signal (Depress the brake pedal) ● D position circuit in Park/Neutral position switch OFF signal (Shift the transmission shift lever from D to N, 2, or L) ● CANCEL switch ON signal ● MAIN switch OFF signal

(Continue)

Function	Outline
Resume Control	After the cruise control mode is cancelled by any of the cancel switches, the mode can be resumed and controlled at the set speed by operating the cruise control switch in the RES/+ direction providing that the vehicle speed has not dropped below the low speed limit [approx. 36 km/h (23 mph)]. The mode cannot be resumed if the vehicle speed once drops below the low speed limit, because the speed in the memory is cleared.
Automatic Cancel Control	When any of the following conditions occur during cruise control driving, the speed that is set in the memory is cleared to cancel the cruise control mode. Furthermore, the cruise main indicator light blinks until the MAIN switch is turned OFF, and the operation of the cruise control is unavailable until the MAIN switch is turned ON again. ● Stop light switch open or short circuit ● The vehicle speed signal is not set for a predetermined period of time (approx. 140 msec) ● ETC-i malfunction
	When any of the following conditions occur during the cruise control driving, the speed that is set in the memory is cleared to cancel the cruise control mode. Furthermore, the cruise main indicator light blinks until the MAIN switch is turned OFF, and the operation of the cruise control is unavailable until the ignition switch is turned OFF again. ● Stop light switch input signal abnormal ● Cancel circuit malfunction
	When any of the following conditions occurs during the cruise control driving, the set speed in the memory is cleared to cancel the cruise control mode. Cruise control can be resumed at the set speed by operating the SET or RESUME switch providing that the vehicle speed is above the lower speed limit [approx. 36 km/h (23 mph)]. ● The vehicle speed falls below the low speed limit [approx. 36 km/h (23 mph)] ● The vehicle speed drops more than 16 km/h (10 mph) below the set speed.
Automatic Transmission Control	When the vehicle is cruising uphill, there is a case where the overdrive turns off depending on the ECT control. After that, when the Engine control ECU judges the end of cruising up from the throttle valve opening angle, the overdrive will turn on again. Also, in case that the overdrive turns off during accelerator or resume control, it will turns on after finishing accelerator or resume control.

4. Diagnosis

- If a malfunction occurs in the cruise control system, during cruise control driving, the engine ECU actuates Auto Cancel of the cruise control and turns on and off the cruise main indicator light to inform the driver of a malfunction. At the same time, the malfunction is stored in memory as a DTC (Diagnostic Trouble Code).
- The DTC can be accessed by connecting a hand-held tester to DLC3 terminal or the SST (09843-18040) to the Tc and CG terminals of the DLC3 and reading the blinking of the cruise main indicator light.
  A hand-held tester can be used to read 5-digit codes. With the SST, 2-digit codes can be read from the number of blinks of the cruise main indicator light. For details, see the Avensis Verso Repair Manual Supplement (Pub. No. RM1032E).
- The DTC listed below is used.

DTC No. 5-digit	Detection Item	DTC No. 2-digit	Circuit Inspection
P0500	Vehicle Speed Sensor “A”	21	Vehicle Speed Sensor Circuit Open
P0503	Vehicle Speed Sensor “A” Intermittent/Erratic/High	23	Vehicle Speed Signal Abnormal
P0571	Brake Switch “A” Circuit	52	Stop Light Switch Circuit Open or Short
P0607	Control Module Performance	54	Input Signal Abnormal

MAJOR TECHNICAL SPECIFICATIONS

Item \ Area				Euripe			
Body Type				Wagon			
Vehicle Grade				—			
Model Code				ACM20R-ARSDKW	ACM20R-ARMDKW	ACM20L-ANSDKW	ACM20L-ANMDKW
Major Dimensions & Vehicle Weights	Overall	Length	mm (in.)	4690 (184.7)	4690 (184.7)	4690 (184.7)	4690 (184.7)
		Width	mm (in.)	1760 (69.3)	1760 (69.3)	1675 (65.9)	1760 (69.3)
		Height	mm (in.)	1675 (65.9), 1725 (67.9)*1	1675 (65.9), 1725 (67.9)*1	1675 (65.9), 1725 (67.9)*1	1675 (65.9), 1725 (67.9)*1
	Wheel Base		mm (in.)	2825 (111.2)	2825 (111.2)	2825 (111.2)	2825 (111.2)
	Tread	Front	mm (in.)	1505 (59.3)	1505 (59.3)	1505 (59.3)	1505 (59.3)
		Rear	mm (in.)	1500 (59.1)	1500 (59.1)	1500 (59.1)	1500 (59.1)
	Room	Length	mm (in.)	2755 (108.5)	2755 (108.5)	2755 (108.5)	2755 (108.5)
		Width	mm (in.)	1505 (59.3)	1505 (59.3)	1505 (59.3)	1505 (59.3)
		Height	mm (in.)	1250 / 1200 (49.2 / 47.2)	1250 / 1200 (49.2 / 47.2)	1250 / 1200 (49.2 / 47.2)	1250 / 1200 (49.2 / 47.2)
	Overhang	Front	mm (in.)	900 (35.7)	900 (35.7)	900 (35.7)	900 (35.7)
		Rear	mm (in.)	965 (38.0)	965 (38.0)	965 (38.0)	965 (38.0)
	Min. Running Ground Clearance		mm (in.)	180 (7.1)	180 (7.1)	180 (7.1)	180 (7.1)
	Angle of Approach		degrees	15.9	15.9	15.9	15.9
	Angle of Departure		degrees	23.1	23.1	23.1	23.1
	Curb Weight	Front	kg (lb)	860 - 900 (1896 - 1984)	825 - 865 (1819 - 1907)	845 - 895 (1863 - 1973)	810 - 860 (1786 - 1896)
		Rear	kg (lb)	630 - 670 (1389 - 1477)	630 - 670 (1389 - 1477)	615 - 655 (1356 - 1444)	615 - 655 (1356 - 1444)
		Total	kg (lb)	1490 - 1570 (3285 - 3461)	1455 - 1535 (3208 - 3384)	1460 - 1550 (3219 - 3417)	1425 - 1515 (3142 - 3340)
	Gross Vehicle Weight	Front	kg (lb)	985 (2172)	950 (2094)	965 (2128)	930 (2050)
		Rear	kg (lb)	1190 (2624)	1190 (2624)	1115 (2458)	1115 (2458)
		Total	kg (lb)	2175 (4795)	2140 (4718)	2080 (4586)	2045 (4508)
	Fuel Tank Capacity		ℓ (Imp.gal.)	60 (13.2)	60 (13.2)	60 (13.2)	60 (13.2)
	Luggage Compartment Capacity		m^3 (cu.ft.)	0.212 (7.5)	0.212 (7.5)	0.212 (7.5)	0.212 (7.5)
Performance	Max. Speed		km / h (mph)	180 (112)	192 (119)	180 (112)	192 (119)
	Max. Cruising Speed		km / h (mph)	—	—	—	—
	Acceleration	0 to 100 km / h	sec.	12.1	11.4	12.1	11.4
		0 to 400 m	sec.	—	—	—	—
	Max. Permissible Speed	1st Gear	km / h (mph)	46 (29)	46 (29)	46 (29)	46 (29)
		2nd Gear	km / h (mph)	86 (53)	86 (53)	86 (53)	86 (53)
		3rd Gear	km / h (mph)	133 (83)	133 (83)	133 (83)	133 (83)
		4th Gear	km / h (mph)	172 (109)	172 (109)	172 (109)	172 (109)
	Min. Turning Radius	Tire	m (ft.)	5.5 (18.0)	5.5 (18.0)	5.5 (18.0)	5.5 (18.0)
		Body	m (ft.)	5.9 (19.4)	5.9 (19.4)	5.9 (19.4)	5.9 (19.4)
Engine	Engine Type			1AZ-FE	1AZ-FE	1AZ-FE	1AZ-FE
	Valve Mechanism			16-Valve, DOHC	16-Valve, DOHC	16-Valve, DOHC	16-Valve, DOHC
	Bore x Stroke		mm (in.)	86.0 x 86.0 (3.39 x 3.39)	86.0 x 86.0 (3.39 x 3.39)	86.0 x 86.0 (3.39 x 3.39)	86.0 x 86.0 (3.39 x 3.39)
	Displacement		cm^3 (cu.in.)	1998 (121.9)	1998 (121.9)	1998 (121.9)	1998 (121.9)
	Compression Ratio			9.8 : 1	9.8 : 1	9.8 : 1	9.8 : 1
	Fuel System			EFI	EFI	EFI	EFI
	Research Octane No. or Cetane No. (Diesel)			95 or higher	95 or higher	95 or higher	95 or higher
	Max. Output		kW / rpm	110 / 6000	110 / 6000	110 / 6000	110 / 6000
	Max. Torque		N·m / rpm	192 / 4000	192 / 4000	192 / 4000	192 / 4000
Engine Electrical	Battery Capacity (5HR)		Voltage & Amp. hr.	12-36	12-36	12-36, 48*2	12-36, 48*2
	Alternator Output		Watts	1200	1200	1200	1200
	Starter Output		kW	1.3	1.2	1.3	1.2
Chassis	Clutch Type			—	Dry, Single	—	Dry, Single
	Transaxle Type			U241E	E356	U241E	E356
	Transmission Gear Ratio	In First		3.943	3.833	3.943	3.833
		In Second		2.197	2.045	2.197	2.045
		In Third		1.413	1.333	1.413	1.333
		In Fourth		1.020	1.028	1.020	1.028
		In Fifth		3.145	0.775	3.145	0.775
		In Reverse		—	3.583	—	3.583
	Counter Gear Ratio			—	—	—	—
	Differential Gear Ratio (Final)			3.120	4.235	3.120	4.235
	Transfer and Rear Differential Gear Ratio			—	—	—	—
	Rear Differential Gear Size		in.	—	—	—	—
	Brake Type	Front		Ventilated Disc	Ventilated Disc	Ventilated Disc	Ventilated Disc
		Rear		Solid Disc	Solid Disc	Solid Disc	Solid Disc
	Parking Brake Type			Duo-Servo	Duo-Servo	Duo-Servo	Duo-Servo
	Brake Booster Type and Size		in.	Single, 10”	Single, 10”	Single, 10”	Single, 10”
	Proportioning Valve Type			—	—	—	—
	Suspension Type	Front		MacPherson Strut	MacPherson Strut	MacPherson Strut	MacPherson Strut
		Rear		Torsion-Beam	Torsion-Beam	Torsion-Beam	Torsion-Beam
	Stabilizer Bar	Front		Standard	Standard	Standard	Standard
		Rear		Standard	Standard	Standard	Standard
	Steering Gear Type			Rack & Pinion	Rack & Pinion	Rack & Pinion	Rack & Pinion
	Steering Gear Ratio (Overall)			16.2 or 16.7	16.2 or 16.7	16.2 or 16.7	16.2 or 16.7
	Power Steering Type			Integral Type	Integral Type	Integral Type	Integral Type

*1: With Roof Rail
*2: Cold Area Package

	Europe					Australia
	Wagon					
	—					
	ACM20L-ARSDKW	ACM20L-ARMDKW	CLM20R-ARMDYW	CLM20L-ANMDYW	CLM20L-ARMDYW	ACM21R-ARSEKQ
	4690 (184.7)	4690 (184.7)	4690 (184.7)	4690 (184.7)	4690 (184.7)	4690 (184.7)
	1675 (65.9)	1760 (69.3)	1760 (69.3)	1760 (69.3)	1760 (69.3)	1675 (65.9)
	1675 (65.9), 1725 (67.9)*1	1675 (65.9), 1725 (67.9)*1	1675 (65.9), 1725 (67.9)*1	1675 (65.9), 1725 (67.9)*1	1675 (65.9), 1725 (67.9)*1	1675 (65.9), 1725 (67.9)*1
	2825 (111.2)	2825 (111.2)	2825 (111.2)	2825 (111.2)	2825 (111.2)	2825 (111.2)
	1505 (59.3)	1505 (59.3)	1505 (59.3)	1505 (59.3)	1505 (59.3)	1505 (59.3)
	1500 (59.1)	1500 (59.1)	1500 (59.1)	1500 (59.1)	1500 (59.1)	1500 (59.1)
	2755 (108.5)	2755 (108.5)	2755 (108.5)	2755 (108.5)	2755 (108.5)	2755 (108.5)
	1505 (59.3)	1505 (59.3)	1505 (59.3)	1505 (59.3)	1505 (59.3)	1505 (59.3)
	1250 / 1200 (49.2 / 47.2)	1250 / 1200 (49.2 / 47.2)	1250 / 1200 (49.2 / 47.2)	1250 / 1200 (49.2 / 47.2)	1250 / 1200 (49.2 / 47.2)	1250 / 1200 (49.2 / 47.2)
	900 (35.7)	900 (35.7)	900 (35.7)	900 (35.7)	900 (35.7)	900 (35.7)
	965 (38.0)	965 (38.0)	965 (38.0)	965 (38.0)	965 (38.0)	965 (38.0)
	180 (7.1)	180 (7.1)	180 (7.1)	180 (7.1)	180 (7.1)	180 (7.1)
	15.9	15.9	15.9	15.9	15.9	15.9
	23.1	23.1	23.1	23.1	23.1	23.1
	850 - 900 (1874 - 1984)	815 - 865 (1797 - 1907)	935 - 980 (2061 - 2161)	920 - 975 (2028 - 2150)	925 - 980 (2039 - 2161)	880 - 895 (1936 - 1969)
	630 - 670 (1389 - 1477)	630 - 670 (1389 - 1477)	625 - 665 (1378 - 1466)	610 - 650 (1345 - 1433)	625 - 665 (1378 - 1466)	620 - 655 (1364 - 1441)
	1480 - 1570 (3263 - 3461)	1445 - 1535 (3186 - 3384)	1560 - 1645 (3439 - 3627)	1530 - 1625 (3373 - 3583)	1550 - 1645 (3417 - 3627)	1500 - 1550 (3300 - 3410)
	985 (2172)	950 (2094)	1065 (2348)	1045 (2304)	1065 (2348)	970 (2134)
	1190 (2624)	1190 (2624)	1185 (2613)	1110 (2447)	1185 (2613)	1225 (2695)
	2175 (4795)	2140 (4718)	2250 (4960)	2155 (4751)	2250 (4960)	2195 (4829)
	60 (13.2)	60 (13.2)	60 (13.2)	60 (13.2)	60 (13.2)	60 (13.2)
	0.212 (7.5)	0.212 (7.5)	0.212 (7.5)	0.212 (7.5)	0.212 (7.5)	0.169 (6.0)
	180 (112)	192 (119)	180 (112)	180 (112)	180 (112)	180 (112)
	—	—	—	—	—	—
	12.1	11.4	12.5	12.5	12.5	—
	—	—	—	—	—	—
	46 (29)	46 (29)	43 (27)	43 (27)	43 (27)	—
	86 (53)	86 (53)	81 (50)	81 (50)	81 (50)	—
	133 (83)	133 (83)	124 (77)	124 (77)	124 (77)	—
	172 (109)	172 (109)	170 (106)	170 (106)	170 (106)	—
	5.5 (18.0)	5.5 (18.0)	5.5 (18.0)	5.5 (18.0)	5.5 (18.0)	5.5 (18.0)
	5.9 (19.4)	5.9 (19.4)	5.9 (19.4)	5.9 (19.4)	5.9 (19.4)	5.9 (19.4)
	1AZ-FE	1AZ-FE	1CD-FTV	1CD-FTV	1CD-FTV	2AZ-FE
	16-Valve, DOHC	16-Valve, DOHC	16-Valve, DOHC	16-Valve, DOHC	16-Valve, DOHC	16-Valve, DOHC
	86.0 x 86.0 (3.39 x 3.39)	86.0 x 86.0 (3.39 x 3.39)	82.2 x 94.0 (3.24 x 3.7)	82.2 x 94.0 (3.24 x 3.7)	82.2 x 94.0 (3.24 x 3.7)	88.5 x 96.0 (3.49 x 3.79)
	1998 (121.9)	1998 (121.9)	1995 (121.7)	1995 (121.7)	1995 (121.7)	2369 (144.1)
	9.8 : 1	9.8 : 1	18.6 : 1	18.6 : 1	18.6 : 1	9.6 : 1
	EFI	EFI	Common-Rail Type	Common-Rail Type	Common-Rail Type	EFI
	95 or higher	95 or higher	48 or higher	48 or higher	48 or higher	91 or higher
	110 / 6000	110 / 6000	85 / 4000	85 / 4000	85 / 4000	115 / 5700
	192 / 4000	192 / 4000	250 / 1800 - 3000	250 / 1800 - 3000	250 / 1800 - 3000	221 / 4000
	12-36, 48*2	12-36, 48*2	12-55	12-55, 64*2	12-55, 64*2	12-48
	1200	1200	1560	1560	1560	1560
	1.3	1.2	1.4	1.4, 2.2*2	1.4, 2.2*2	1.3
	—	Dry, Single	Dry, Single	Dry, Single	Dry, Single	—
	U241E	E356	E355	E355	E355	U241E
	3.943	3.833	3.833	3.833	3.833	3.943
	2.197	2.045	2.045	2.045	2.045	2.197
	1.413	1.333	1.333	1.333	1.333	1.413
	1.020	1.028	0.972	0.972	0.972	1.020
	3.145	0.775	0.775	0.775	0.775	3.145
	—	3.583	3.583	3.583	3.583	—
	—	—	—	—	—	—
	3.120	4.235	3.684	3.684	3.684	2.923
	—	—	—	—	—	—
	—	—	—	—	—	—
	Ventilated Disc	Ventilated Disc	Ventilated Disc	Ventilated Disc	Ventilated Disc	Ventilated Disc
	Solid Disc	Solid Disc	Solid Disc	Solid Disc	Solid Disc	Solid Disc
	Duo-Servo	Duo-Servo	Duo-Servo	Duo-Servo	Duo-Servo	Duo-Servo
	Single, 10”	Single, 10”	Single, 9”	Single, 9”	Single, 9”	Single, 10”
	—	—	—	—	—	—
	MacPherson Strut	MacPherson Strut	MacPherson Strut	MacPherson Strut	MacPherson Strut	MacPherson Strut
	Torsion-Beam	Torsion-Beam	Torsion-Beam	Torsion-Beam	Torsion-Beam	Torsion-Beam
	Standard	Standard	Standard	Standard	Standard	Standard
	Standard	Standard	Standard	Standard	Standard	Standard
	Rack & Pinion	Rack & Pinion	Rack & Pinion	Rack & Pinion	Rack & Pinion	Rack & Pinion
	16.2 or 16.7	16.2 or 16.7	16.2 or 16.7	16.2 or 16.7	16.2 or 16.7	16.2 or 16.7
	Integral Type	Integral Type	Integral Type	Integral Type	Integral Type	Integral Type

*1: With Roof Rail
*2: Cold Area Package

Item / Area				General Countries
Body Type				Wagon
Vehicle Grade				—
Model Code				ACM20R-ARSEK
Major Dimensions & Vehicle Weights	Overall	Length	mm (in.)	4690 (184.7)
		Width	mm (in.)	1675 (65.9)
		Height	mm (in.)	1675 (65.9), 1725 (67.9)*1
	Wheel Base		mm (in.)	2825 (111.2)
	Tread	Front	mm (in.)	1505 (59.3)
		Rear	mm (in.)	1500 (59.1)
	Room	Length	mm (in.)	2755 (108.5)
		Width	mm (in.)	1505 (59.3)
		Height	mm (in.)	1250 / 1200 (49.2 / 47.2)
	Overhang	Front	mm (in.)	900 (35.7)
		Rear	mm (in.)	965 (38.0)
	Min. Running Ground Clearance		mm (in.)	180 (7.1)
	Angle of Approach		degrees	15.9
	Angle of Departure		degrees	23.1
	Curb Weight	Front	kg (lb)	870 - 885 (1914 - 1947)
		Rear	kg (lb)	620 - 655 (1364 - 1441)
		Total	kg (lb)	1490 - 1540 (3278 - 3388)
	Gross Vehicle Weight	Front	kg (lb)	960 (2112)
		Rear	kg (lb)	1225 (2695)
		Total	kg (lb)	2185 (4707)
	Fuel Tank Capacity		ℓ (Imp.gal.)	60 (13.2)
	Luggage Compartment Capacity		m^3 (cu.ft.)	0.212 (7.5)
Performance	Max. Speed		km / h (mph)	180 (112)
	Max. Cruising Speed		km / h (mph)	—
	Acceleration	0 to 100 km / h	sec.	12.1
		0 to 400 m	sec.	—
	Max. Permissible Speed	1st Gear	km / h (mph)	46 (29)
		2nd Gear	km / h (mph)	86 (53)
		3rd Gear	km / h (mph)	133 (83)
		4th Gear	km / h (mph)	172 (109)
	Min. Turning Radius	Tire	m (ft.)	5.5 (18.0)
		Body	m (ft.)	5.9 (19.4)
Engine	Engine Type			1AZ-FE
	Valve Mechanism			16-Valve, DOHC
	Bore x Stroke		mm (in.)	86.0 x 86.0 (3.39 x 3.39)
	Displacement		cm^3 (cu.in.)	1998 (121.9)
	Compression Ratio			9.8 : 1
	Fuel System			EFI
	Research Octane No. or Cetane No. (Diesel)			95 or higher
	Max. Output		kW / rpm	110 / 6000
	Max. Torque		N·m / rpm	192 / 4000
Engine Electrical	Battery Capacity (5HR)		Voltage & Amp. hr.	12-36
	Alternator Output		Watts	1200
	Starter Output		kW	1.3
Chassis	Clutch Type			—
	Transaxle Type			U241E
	Transmission Gear Ratio	In First		3.943
		In Second		2.197
		In Third		1.413
		In Fourth		1.020
		In Fifth		3.145
		In Reverse		—
	Counter Gear Ratio			—
	Differential Gear Ratio (Final)			3.120
	Transfer and Rear Differential Gear Ratio			—
	Rear Differential Gear Size		in.	—
	Brake Type	Front		Ventilated Disc
		Rear		Solid Disc
	Parking Brake Type			Duo-Servo
	Brake Booster Type and Size		in.	Single, 10”
	Proportioning Valve Type			—
	Suspension Type	Front		MacPherson Strut
		Rear		Torsion-Beam
	Stabilizer Bar	Front		Standard
		Rear		Standard
	Steering Gear Type			Rack & Pinion
	Steering Gear Ratio (Overall)			16.2 or 16.7
	Power Steering Type			Integral Type

*1: With Roof Rail
*2: Cold Area Package